Roofing System

Submittal Package

Project Name:

Project Address:

Roofing Contractor:

Product Data Sheet

MULE-HIDE PVC MEMBRANE

PRODUCT DESCRIPTION

Revision Date: May 2022

Mule-Hide's Sure-Flex PVC is an advanced-formula, heat-weldable PVC thermoplastic membrane that is designed for long-term weatherability and performance. The physical properties of the membrane are enhanced by a tenacious, weft-inserted polyester fabric that is encapsulated by thick PVC-based top and bottom plies. The smooth surface of the PVC membrane allows for a total-surface fusion and permanent weld, creating a consistent, watertight, monolithic roof assembly. PVC can be used in adhered and mechanically fastened systems. The gray-colored bottom ply provides a visual confirmation of a proper weld during the lap welding process.

FEATURES AND BENEFITS

- Wide choice of membrane sizes, thicknesses and colors
- Enhanced chemical resistance
- Energy efficiency
- Wide window of weldability
- Flexibility in low temperatures
- Impact and puncture resistance
- UV, ozone and oxidation resistance
- Easy installation
- Available in white, gray, and tan

INSTALLATION

With minimal labor and few components required, PVC is quick and easy to install. PVC systems are installed using an Automatic Heat Welder, making sheet welding fast, clean and consistent.

Fully Adhered Roofing System

The fully adhered system starts with a suitable surface upon which the Low-VOC PVC Bonding Adhesive or HydroBond™ Water-Based PVC Bonding Adhesive is applied.

Mechanically Fastened Roofing System

The mechanically fastened system starts with approved insulation being fastened with a minimum of 5 fasteners per 4' x 8' board. The PVC membrane is then mechanically fastened to the deck using HDP Fasteners and 2.4" Plates™, or EHD Fasteners and 2.4" Plates. Adjoining sheets of PVC membrane are overlapped over the fasteners and plates and joined together with a minimum 1½"-wide hot-air weld.

Review Mule-Hide specifications and details for complete installation information.

PRECAUTIONS

- Sunglasses that filter out ultraviolet light are strongly recommended, as the membrane's white surface is highly reflective to sunlight. Roofing technicians should dress appropriately and wear sunscreen.
- Smooth surfaces may cause slippery conditions due to frost and ice buildup. Exercise caution during cold conditions to prevent falls.
- Care must be exercised when working close to a roof edge when surrounding area is snow-covered, as the roof edge may not be clearly visible.
- Use proper stacking procedures to ensure sufficient stability of the materials.
- Exercise caution when walking on wet membrane. Membranes may be slippery when wet.
- Store PVC membrane in the original undisturbed plastic wrap in a cool, shaded area and cover with light-colored, breathable, waterproof tarpaulins. PVC membrane that has been exposed to the weather or

contaminated with dirt must be prepared with PVC Membrane Cleaner prior to hot-air welding.

TYPICAL PHYSICAL PROPERTIES

Physical Property*	ASTM D4434 Requirement	50-mil	60-mil	80-mil
Thickness over scrim, in. (mm) ASTM D4434 optical method, ave of 3	0.016 min (0.40)	0.022 typ (0.559)	0.027 typ (0.686)	0.037 typ (0.940)
Weight, lbs/ft^2 (kg/m^2)	No Requirement	0.33 (1.61)	0.40 (1.95)	0.55 (2.68)
Breaking Strength (MD x CD), lbf/in (kN/m) ASTM D751 grab method	275 min (48)	320 x 300 (56 x 53)	330 X 300 (58 x 55)	360 x 330 (63 x 58)
Elongation break of reinforcement (MD x CD) % ASTM D751 grab method	25 min	30 x 30	30 x 30	30 x 30
Tearing Strength (MD x CD), lbf (N) ASTM D751 proc. B, 8" x 8"	90 min (400)	100 x 120 (445 x 534)	100 x 130 (445 x 578)	100 x 132 (445 x 587)
Low Temperature Bend, no cracks @5x ASTM D2136	PASS	Pass -40ºF (-40ºC)	- Pass -40ºF (-40ºC)	Pass -40ºF (-40ºC)
Linear Dimensional Change % ASTM D1204, 6 hours @ 176° F (80° C)	±0.5 max	0.4 typ	0.4 typ	0.4 typ
Ozone Resistance, no cracks @ 7x ASTM D1149, 100 pphm, 168 hrs	PASS	PASS	PASS	PASS
Water absorption resistance, mass % ASTM D570 166 hrs @ 158° F (70° C)	±3.0 max	2.0 typ	2.0 typ	2.0 typ
Field seam strength, lbf/in. (kN/m) ASTM D1876 tested in peel	No Requirement	25 (4.4) min 60 (10.5) typ	25 (4.4) min 60 (10.5) typ	25 (4.4) min 60 (10.5) typ
Water Vapor Permeance, Perms ASTM E96 proc. B	No Requirement	0.10 max 0.05 typ	0.10 max 0.05 typ	0.10 max 0.05 typ
Puncture resistance Federal lbf (kN) FTM 101C, method 2031 Dynamic, J (ft-lb) ASTM D5635 Static, lbf (N) ASTM D5602	No Requirement 20 (14.7) 33 (145)	280 PASS PASS	320 PASS PASS	380 PASS PASS
Xenon-Arc Resistance, no cracks or crazing @ 10x, ASTM G155, 0.35 W/m^2 at 340 nm, 63ºC B.P.T, 12,600 kJ/m^2) total radiant exposure 10,000 hrs	PASS	PASS	PASS	PASS
Properties after heat aging ASTM D3045, 56 days @ 176ºF Breaking strength % retained Elongation rein., % retained	 90 min 90 min	 90 min 90 min	 90 min 90 min	 90 min 90 min

*Typical properties and characteristics are based on samples tested and are not guaranteed for all samples of this product. This data and information is intended as a guide and does not reflect the specification range for any particular property of this product.

Radiative Properties for Cool Roof Rating Council (CRRC) and LEED®				
PHYSICAL PROPERTY	TEST METHOD	WHITE PVC	COOL TAN PVC	COOL GRAY PVC
CRRC initial solar reflectance	ASTM C1549	0.86	0.72	0.59
CRRC solar reflectance after 3 years	ASTM C1549 (uncleaned)	0.63	0.56	0.49
CRRC initial thermal emittance	ASTMC1371	0.89	0.87	0.89
CRRC thermal emittance after 3 years	ASTM C1371 (uncleaned)	0.87	0.87	0.89
CRRC SRI (Solar Reflectance Index)	ASTM E1980	108	88	70
CRRC SRI (Solar Reflectance Index - 3 yrs)	ASTM E1980	75	66	57
CRRC Product ID Number		0670-0015	0670-0035	0670-0036

LEED® Information	
Pre-consumer Recycled Content	10%
Post-consumer Recycled Content	0%
Manufacturing Location	Greenville, IL
Solar Reflectance Index (SRI)	White: 108, Tan 88, Gray 70

SUPPLEMENTAL APPROVALS, STATEMENTS and CHARACTERISTICS

- Mule-Hide PVC meets or exceeds the requirements of ASTM D4434 Standard Specification for Poly (Vinyl Chloride) Sheet Roofing. Mule-Hide PVC is classified as Type III and/or Type IV as defined by ASTM D4434.
- Mule-Hide reinforced PVC was tested for dynamic puncture resistance per ASTM D5635-04 using the most recently modified impact head.
- 50-mil thick membrane was watertight after an impact energy of 22.5 J (16.6 ft-lbf), which passes the ASTM D4434 requirement.
- Mule-Hide reinforced PVC was tested for static puncture resistance per ASTM D5602-98 and exceeded 33 lbf (145 N), which passes the ASTM D4434 requirement.

PROTECTION & SAFETY

Mule-Hide maintains Safety Data Sheets on all of its non-exempt products. Safety Data Sheets contain health and safety information for your development of appropriate product handling procedures to protect your employees and customers. Mule-Hide's Safety Data Sheets should be read and understood by all of your supervisory personnel and employees before using Mule-Hide products in your facilities.

ADDITIONAL INFORMATION

The information given on this PDS is subject to change without notice. Always check the Mule-Hide website at www.mulehide.com for the latest information, changes and updates or contact Mule-Hide Products Company at 800-786-1492.

DISCLAIMER

The statements provided concerning the material shown are intended as a guide for material usage and are believed to be true and accurate at the time of printing. No statement made by anyone may supersede this information, except when done in writing by Mule-Hide Products Co., Inc. Since the manner of use is beyond our control, Mule-Hide does not authorize anyone to make any warranty of merchantability or fitness for any particular purpose or any other warranty, guarantee or representation, expressed or implied, concerning this material. This product may be eligible for a Mule-Hide warranty, please check the Mule-Hide website at www.mulehide.com or contact Mule-Hide directly at 800-786-1492 for details. Buyer and user accept the product under these conditions and assume the risk of any failure, any injury person or property (including that of the user), loss or liability resulting from the handling, storage or use of the product whether or not it is handled, stored or used in accordance with the directions or specifications. Mule-Hide must be notified in writing of any claims and be given the opportunity to inspect the alleged failure before repairs are made.

Product Data Sheet

MULE-HIDE DRILL POINT FASTENERS

PRODUCT DESCRIPTION

Rev. May 2020

Mule-Hide Drill Point Fasteners are # 12 fasteners that are specifically engineered to attached insulation, cover boards and base sheets to wood and steel decking (16 to 22 gauge). These fasteners incorporate a No. 3 Phillips recess, flat truss head with a #2 double flute self-drilling point. The drill point has an exclusive tapered entry thread design that allows for fastener penetration into steel roof decks and offers exceptional back-out resistance.

BASIC USES

Mule-Hide's Drill Point Fasteners are designed specifically for the mechanical attachment of Mule-Hide's Poly ISO 1 and Poly ISO 2 roof insulation boards and other FM approved insulation / cover boards into steel and wood decks. The Mule-Hide Drill Point Fasteners may be used in conjunction with the Mule-Hide 3" Insulation Plates. Refer to Mule-Hide's appropriate Single-Ply Manuals for installation instructions and uses.

SPECIFICATIONS

Property	Standard	Average Ultimate Value
Wire:	----	SAE C-1022, heat treated wire
Coating:	----	TRU-Kote™ Epoxy E-Coat
Corrosion Resistance	FM 4470, ASTM D6294, DIN 50018	<15% Red Rust after 30 cycles
Tensile Strength	ASTM F606-10	2500 lb.
Shear Strength	NASM 1312-20	1900 lb. (thread zone)

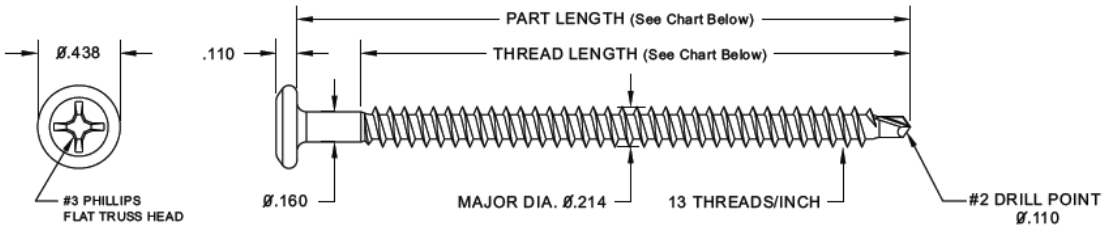

PACKAGING

Screw Length*	Thread Length*	Pieces/Box	Weight/Box
1-5/8"	1-5/8"	1000	11.8 lbs
2-1/4"	2-1/4"	1000	16.2 lbs
2-7/8'	2-7/8"	1000	19.7 lbs
3-1/4"	2-7/8"	1000	21.5 lbs
3-3/4"	2-7/8"	1000	24.6 lbs
4-1/2"	3-7/8"	1000	28.8 lbs
5"	3-7/8"	1000	31.5lbs
6"	3-7/8"	1000	37.1 lbs
7"	3-7/8"	500	20.9 lbs
8"	3-7/8"	500	23.9 lbs
Screw Length and Thread Length are ± 1/16"			

MULE-HIDE DRILL POINT FASTENERS

PERFORMANCE INFORMATION

Average Ultimate Pullout Values in Corrugated Steel Deck Substrates													
Thickness	24 ga.	22 ga.			20 ga.			18 ga.			16 ga.		
Strength, ksi	36.5	33.0	80.0	102.0	33.0	80.0	102.0	33.0	80.0	102.0	33.0	80.0	102.0
Pullout (lbs)	230	285	410	465	355	505	580	540	715	800	710	1000	1142

Average Ultimate Pullout Values in Wood Substrates								
Type	APA Rated OSB				APA Rated Plywood			SPF #2
Thickness	7/16”	15/32”	19/32”	23/32”	15/32”	19/32”	23/32”	
Pullout (lbs)	265	300	325	440	365	475	720	700*

- *lbf./in. of thread penetration including tip.
- Pull out values are offered only as a guide and are not guaranteed in any way.
- Designated holding powers are dependent upon quality of substrate and accuracy of installation.
- Mule-Hide recommends that fastener pull out testing be performed to verify fastener performance.

CODE APPROVALS/COMPLIANCE

Mule-Hide Drill Point Fasteners comply with the requirements of the following specifications, test and code requirements when properly installed.

* FM Standard 4450/4470 Approval * Metro-Dade Approved *Florida Product Approval

LEED® Information	
Manufacturing Location	Bryan, OH
LEED Eligible Recycle Content	20%

INSTALLATION INSTRUCTIONS

Steel and Wood Decks

Install fasteners with #3 Phillips drive bit provided in box and a variable speed screw gun. Fastener must penetrate the deck a minimum of ¾” as measured from the underside of the roof deck to the fastener tip. Ensure that fastener is installed perpendicular to surface of roof deck. Care should be taken to not overdrive the fastener causing damage to roof insulation, fastener or roof deck.

Use eye protection when installing fasteners.

PROTECTION & SAFETY

Mule-Hide maintains Safety Data Sheets on all of its non-exempt products. Safety Data Sheets contain health and safety information for your development of appropriate product handling procedures to protect your employees and customers. Mule-Hide's Safety Data Sheets should be read and understood by all of your supervisory personnel and employees before using Mule-Hide products in your facilities.

ADDITIONAL INFORMATION

The information given on this PDS is subject to change without notice. Always check the Mule-Hide website at www.mulehide.com for the latest information, changes and updates or contact Mule-Hide Products Company at 800-786-1492.

DISCLAIMER

The statements provided concerning the material shown are intended as a guide for material usage and are believed to be true and accurate at the time of printing. No statement made by anyone may supersede this information, except when done in writing by Mule-Hide Products Co., Inc. Since the manner of use is beyond our control, Mule-Hide does not authorize anyone to make any warranty of merchantability or fitness for any particular purpose or any other warranty, guarantee or representation, expressed or implied, concerning this material. This product may be eligible for a Mule-Hide warranty, please check the Mule-Hide website at www.mulehide.com or contact Mule-Hide directly at 800-786-1492 for details. Buyer and user accept the product under these conditions and assume the risk of any failure, any injury person or property (including that of the user), loss or liability resulting from the handling, storage or use of the product whether or not it is handled, stored or used in accordance with the directions or specifications. Mule-Hide must be notified in writing of any claims and be given the opportunity to inspect the alleged failure before repairs are made.

Product Data Sheet

MULE-HIDE HDP (#14) FASTENERS

PRODUCT DESCRIPTION

Rev. May 2020

Mule-Hide Heavy-Duty Drill Point Fasteners are # 14 fasteners that are specifically engineered to attached insulation, cover boards and base sheets to wood and steel decking (16 to 22 gauge). These fasteners incorporate a No. 3 Phillips recess, flat truss head with a #2 double flute self-drilling point. The drill point has an exclusive tapered entry thread design that allows for fastener penetration into steel roof decks and offers exceptional back-out resistance.

BASIC USES

Mule-Hide's HDP Fasteners are designed specifically for the mechanical attachment of Mule-Hide's reinforced EPDM, TPO and PVC membranes and for the mechanical attachment of Poly ISO 1 and Poly ISO 2 roof insulation boards and other FM approved insulation / cover boards into steel, wood and concrete decks. The Mule-Hide HDP Fasteners may be used in conjunction with the Mule-Hide 2.4" Seam Plates, 3" Insulation Plates and All Purpose Bars. Refer to Mule-Hide's appropriate Single-Ply Manuals for installation instructions and uses.

SPECIFICATIONS

Property	Standard	Average Ultimate Value
Wire:	----	SAE C-1022, heat treated wire
Coating:	----	TRU-Kote™ Epoxy E-Coat
Corrosion Resistance	FM 4470, ASTM D6294, DIN 50018	<15% Red Rust after 30 cycles
Tensile Strength	ASTM F606-10	3200 lbf.
Shear Strength	NASM 1312-20	2200 lb. (thread zone)

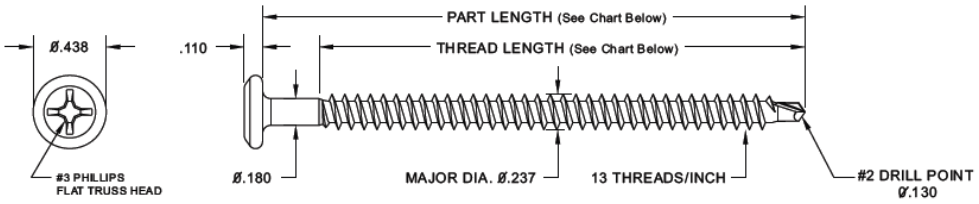

PACKAGING

Screw Length*	Thread Length*	Pieces/Box	Weight/Box
1-1/2"	1-1/2"	1000	12.9 lbs
2"	2"	1000	15.5 lbs
2-1/2"	2-1/2"	1000	19.4 lbs
3"	2-7/8"	1000	23.7 lbs
3-1/2"	2-7/8"	1000	26.4 lbs
4"	3-7/8"	1000	30.9 lbs
4-1/2"	3-7/8"	1000	33.6 lbs
5"	3-7/8"	1000	37.3 lbs
5-1/2"	3-7/8"	1000	40.8 lbs
6"	3-7/8"	1000	44.0 lbs
7"	3-7/8"	500	25.9 lbs
8"	3-7/8"	500	29.7 lbs
9"	3-7/8"	250	16.6 lbs
10"	3-7/8"	250	18.5 lbs
11"	3-7/8"	250	20.1 lbs
12"	3-7/8"	250	22.0 lbs
***Notes:** Screw Length is ± 1/16" Thread Length is ± 1/16"			

MULE-HIDE HDP (#14) FASTENERS

Performance Information

Average Ultimate Pullout Values in Corrugated Steel Deck Substrates													
Thickness	24 ga.	22 ga.			20 ga.			18 ga.			16 ga.		
Strength, ksi	36.5	33.0	80.0	102.0	33.0	80.0	102.0	33.0	80.0	102.0	33.0	80.0	102.0
Pullout (lbs)	255	315	480	560	420	615	710	675	885	985	850	1115	1240

Average Ultimate Pullout Values in Wood Substrates									Concrete
Type	APA Rated OSB				APA Rated Plywood				3,000 psi
Thickness	7/16”	15/32”	19/32”	23/32”	15/32”	19/32”	23/32”	SPF #2	
Pullout (lbs)	270	290	310	410	360	410	730	795*	450*

- *lbf./in. of thread penetration including tip.
- Pull out values are offered only as a guide and are not guaranteed in any way.
- Designated holding powers are dependent upon quality of substrate and accuracy of installation.
- Mule-Hide recommends that fastener pull out testing be performed to verify fastener performance.

CODE APPROVALS/COMPLIANCE

Mule-Hide HDP Fasteners comply with the requirements of the following specifications, test and code requirements when properly installed. FM Standard 4450/4470 Approved, Metro-Dade Approved, Florida Product Approvals.

LEED® Information	
Manufacturing Location	Bryan, OH
LEED Eligible Recycle Content	20%

INSTALLATION INSTRUCTIONS

Steel and Wood Decks
Install fasteners with #3 Phillips drive bit provided in box and a variable speed screw gun. Fastener must penetrate the deck a minimum of ¾” as measured from the underside of the roof deck to the fastener tip. Ensure that fastener is installed perpendicular to surface of roof deck. Care should be taken to not overdrive the fastener causing damage to roof insulation, fastener or roof deck.

Concrete Decks
Pre-drill a 3/16” diameter hole using a drill bit that meets ANSI Standard B212.15 requirements and hammer drill. Drill hole a minimum of ½” deeper than fastener embedment and clean debris from hole. Using the #3 Phillips drill bit provided and a 0 to 1500 rpm screw gun, install fastener to a minimum embedment of 1” until fastener head is properly seated in bar or plate. Care should be taken to not overdrive the fastener causing damage to roof insulation, fastener or roof deck. **Use eye protection when installing fasteners.**

PROTECTION & SAFETY

Mule-Hide maintains Safety Data Sheets on all of its non-exempt products. Safety Data Sheets contain health and safety information for your development of appropriate product handling procedures to protect your employees and customers. Mule-Hide's Safety Data Sheets should be read and understood by all of your supervisory personnel and employees before using Mule-Hide products in your facilities.

ADDITIONAL INFORMATION

The information given on this PDS is subject to change without notice. Always check the Mule-Hide website at www.mulehide.com for the latest information, changes and updates or contact Mule-Hide Products Company at 800-786-1492.

DISCLAIMER

The statements provided concerning the material shown are intended as a guide for material usage and are believed to be true and accurate at the time of printing. No statement made by anyone may supersede this information, except when done in writing by Mule-Hide Products Co., Inc. Since the manner of use is beyond our control, Mule-Hide does not authorize anyone to make any warranty of merchantability or fitness for any particular purpose or any other warranty, guarantee or representation, expressed or implied, concerning this material. This product may be eligible for a Mule-Hide warranty, please check the Mule-Hide website at www.mulehide.com or contact Mule-Hide directly at 800-786-1492 for details. Buyer and user accept the product under these conditions and assume the risk of any failure, any injury person or property (including that of the user), loss or liability resulting from the handling, storage or use of the product whether or not it is handled, stored or used in accordance with the directions or specifications. Mule-Hide must be notified in writing of any claims and be given the opportunity to inspect the alleged failure before repairs are made.

Product Data Sheet

Low-VOC PVC BONDING ADHESIVE

PRODUCT DESCRIPTION

A high strength solvent-based contact adhesive that allows bonding of PVC and KEE membranes to various porous and non-porous substrates. It is specially formulated using a blend of VOC-exempt and non-exempt solvents to be in compliance with the state of California Clean Air Act of 1988 (updated in 1997) and as further regulated by California's Air Quality Control Districts listing VOC limitations. This product also meets the <250 gpl VOC content requirements of the OTC Model Rule for Single Ply Roofing Adhesive.

BASIC USES

Mule-Hide Low VOC PVC Bonding Adhesive is used for bonding PVC flashings and membranes to a variety of substrates.

TYPICAL PHYSICAL PROPERTIES

Typical Properties and Characteristics*	
Base	Synthetic Rubber
Color	Pale Yellow to Orange to Amber
Solids	23.6% to 29.6%
Flash Point	-4° F (-20° C) SETA
Brookfield Viscosity	1500 to 4500 Centipoises
Avg. Net Weight	6.9 to 7.7 lbs/gal (0.8 to 9 kg/l)
Packaging	5 Gallon Pail
Shelf Life	1 year

LEED Information	
Pre-consumer Recycled Content	0%
Post-consumer Recycled Content	0%
VOC Content	<250 g/l
Manufacturing Location	Carlisle, PA

*General properties. Typical properties and characteristics are based on samples tested and are not guaranteed for all samples of this product. This data and information is intended as a guide and does not reflect the specification or specification range for any particular property of this product.

BENEFITS & SUPPLEMENTAL STATEMENTS

- High strength adhesive with quick bonding characteristics
- Ease of application with a medium nap roller
- Provides excellent adhesion between PVC & KEE membranes and a variety of substrates

CODE APPROVALS/COMPLIANCE

A variety of Factory Mutual Ratings and Underwriter Laboratory Classifications are available. Contact Mule-Hide Technical Department for additional information.

COVERAGE RATES

60 ft^2 (5.6 square m) per gallon finished surface. Coverage rates are average and may vary due to conditions on the job site. Porous surfaces and substrates may require more bonding adhesive than the typical coverage rate.

INSTALLATION TEMPERATURE

If adhesive is stored at temperatures lower than 60° F, restore to room temperature (~70° F) before use.

INSTALLATION INSTRUCTIONS

Surface Preparation

1. The surface, on or against which adhesive is to be applied, shall be clean, smooth, dry, free of fins, sharp edges, loose and foreign materials, oil and grease. Depressions greater than 1/4" (6 mm) should be feathered; using epoxy, mortar or other approved patching material. All sharp projections shall be removed by sweeping, blowing or vacuum cleaning.

Mixing

1. **Stir thoroughly until all settled pigments are dispersed and the adhesive is uniform in color. Stir adhesive for a minimum of 5 minutes.**

Application

1. After thorough stirring (minimum 5 minutes), apply Low VOC PVC Bonding Adhesive to substrate and membrane using a 9" (228 mm) wide, ½" (13mm) medium nap roller. Application shall be continuous and uniform avoiding globs or puddles. An open time of 5 to 90 minutes, based on drying conditions is recommended before assembly. Low VOC PVC Bonding Adhesive must be allowed to dry until tacky but does not string or stick to a dry finger touch. Any coated area, which has been exposed to rain, should be allowed to dry and then recoated. **Do not apply adhesive to seam areas.**

2. Roll the membrane onto the adhesive coated substrate while avoiding wrinkles. Immediately brush down the bonded portion of the sheet with a soft bristle push broom or a clean dry roller applicator to achieve maximum contact.

REVIEW CURRENT MULE-HIDE SPECIFICATIONS & DETAILS FOR SPECIFIC APPLICATION REQUIREMENTS.

PRECAUTIONS

1. Review the applicable Material Safety Data Sheet for complete safety information prior to use.

2. Low VOC PVC Bonding Adhesive is **EXTREMELY FLAMMABLE** – It contains solvents that are dangerous fire and explosion hazards when exposed to heat, flame or sparks. Do not smoke while applying. Do not use in a confined or unventilated area. Vapors are heavier than air and may travel along ground or may be moved by ventilation and ignited by pilot lights, other flames, sparks, heaters, smoking, electrical motors, static discharge, or other ignition sources at locations distant from material handling point and flashback. All containers should be grounded when material is transferred from one container to another. A red caution label is required when shipping. A fire extinguisher should be available. In case of fire, use water spray, foam, dry chemical or carbon dioxide. Do not use a solid stream of water because it can scatter and spread the fire.

3. Avoid breathing vapors. Keep container closed when not in use. Use with adequate ventilation. If inhaled, remove to fresh air. If not breathing, perform artificial respiration. If breathing is difficult, give oxygen. Call a physician immediately. During application, efforts must be made to prevent fumes from entering the building via air ventilation ducts. Do not place open containers or mix adhesive near fresh air intake units. When possible, shut down or seal off the closest units.

4. If swallowed, **DO NOT INDUCE VOMITING.** Call a physician immediately.

5. Avoid contact with eyes. Safety glasses or goggles are recommended. If splashed in eyes, immediately flush eyes with plenty of clean water for at least 15 minutes. Contact a physician immediately.

6. Avoid contact with skin. Wash hands thoroughly after handling. In case of contact with skin, thoroughly wash affected area with soap and water. Contact physician if irritation persists.

PRECAUTIONS (continued)

Note: Permeation-resistant gloves (that meet ANSI/ISEA 105-2005) are recommended to be worn when using this product to protect hands from irritating ingredients.

7. Do not thin PVC Low-VOC Bonding Adhesive. Thinning will affect performance. Excessively thick or gelled material should be discarded.

8. Opened containers of PVC Low-VOC Bonding Adhesive should be used within 48 hours. Adhesives will begin to thicken after this point, making it difficult and eventually impossible to control applied thickness. In hot weather, do not leave sealed containers on roof for prolonged periods of time. In cold weather, keep material at room temperature until ready to use. Stir adhesive occasionally while using.

9. Adhesive must be allowed to dry thoroughly. If membrane is mated with the substrate prior to the adhesive being dry, blistering will occur and will not subside over time.

10. KEEP OUT OF REACH OF CHILDREN.

PROTECTION & SAFETY

Mule-Hide maintains Safety Data Sheets on all of its non-exempt products. Safety Data Sheets contain health and safety information for your development of appropriate product handling procedures to protect your employees and customers. Mule-Hide's Safety Data Sheets should be read and understood by all of your supervisory personnel and employees before using Mule-Hide products in your facilities.

ADDITIONAL INFORMATION

The information given on this PDS is subject to change without notice. Always check the Mule-Hide website at www.mulehide.com for the latest information, changes and updates or contact Mule-Hide Products Company at 800-786-1492.

DISCLAIMER

The statements provided concerning the material shown are intended as a guide for material usage and are believed to be true and accurate at the time of printing. No statement made by anyone may supersede this information, except when done in writing by Mule-Hide Products Co., Inc. Since the manner of use is beyond our control, Mule-Hide does not authorize anyone to make any warranty of merchantability or fitness for any particular purpose or any other warranty, guarantee or representation, expressed or implied, concerning this material. Buyer and user accept the product under these conditions and assume the risk of any failure, any injury person or property (including that of the user), loss or liability resulting from the handling, storage or use of the product whether or not it is handled, stored or used in accordance with the directions or specifications. Mule-Hide must be notified in writing of any claims and be given the opportunity to inspect the alleged failure before repairs are made.

Product Data Sheet

AQUA BASE 120 BONDING ADHESIVE

PRODUCT DESCRIPTION

Aqua Base 120 is a semi pressure-sensitive water base bonding adhesive that can be used with Mule-Hide fleece back membranes as well as standard (non fleece back) EPDM and TPO membranes. Aqua Base 120 offers high peel strength with low-VOCs and no strong odors.

BASIC USES

Aqua Base 120 bonding adhesive can be used as a single side, wet lay-in adhesive on horizontal surfaces with our Mule-Hide fleece back membranes. It can also be used as a two-sided, contact adhesive with our standard (non-fleece back) EPDM and TPO roofing membranes on both vertical and horizontal surfaces.

May be used as a component in Mule-Hide warranted systems up to 20 years

TYPICAL PHYSICAL PROPERTIES

Typical values*	
Base Material	Acrylic
Color	Pink (yellow cast when dry)
Solids	57.5%
VOC:	8 g/l max
Flash Point	>212°F
Brookfield Viscosity	20,000 Centipoises
Avg Net Weight	8.8 lbs. / gallon (3.99 Kg)
Packaging	5 Gallon Pail
Shelf Life	1 Year

*General properties. Typical properties and characteristics are based on samples tested and are not guaranteed for all samples of this product. This data and information is intended as a guide and does not reflect the specification or specification range for any particular property of this product.

PACKAGING

5 Gallon Pails

COVERAGE RATES

Fleece Back Membranes - Single-side, wet lay-in: Coverage rate for Aqua Base 120 applied as single side, wet lay-in is approximately 100 to 120 ft² (10.2 square m) of finished surface per gallon

Standard (non-fleece back) Membranes - Double-sided, contact lay-in: Coverage rate for Aqua Base 120 applied as double sided, contact lay-in is approximately 100 to 120 ft² (5.1 square m) of finished surface per gallon (membrane and substrate).

These coverage rates are an average and may vary due to conditions on the job site. Porous surfaces and substrates may require more bonding adhesive than the typical coverage rate information shown above.

INSTALLATION TEMPERATURE

Adhesive is designed to be applied when ambient temperature is 40°F (4°C) and rising. Do not apply if ambient temperature will drop below 32°F (0°C) before adhesive completely dries.

INSTALLATION INSTRUCTIONS

1. The surface to which adhesive is to be applied must be clean, smooth, dry, free of fins, sharp edges, loose and foreign materials. Depressions or offsets greater than ¼" should be feathered using epoxy, mortar or other approved material. All sharp projections shall be removed by sweeping, blowing or vacuum cleaning.

2. Aqua Base 120 bonding adhesive is approved for use over Polyiso, Dens Deck Prime, High Density Fiberboard, OSB, Plywood, cellular lightweight concrete and structural concrete.

3. Mix adhesive thoroughly scraping the sides and bottom of the can (minimum of 5 minutes is required) until adhesive is uniform in color.

4. Using a ¼" or ⅜" nap roller apply adhesive in a uniform manner avoiding globs, puddles and holidays (uncoated areas). Avoid accumulation of adhesive between insulation joints. Do not exceed published application rates.

Single Side (wet lay-in) Application with Fleece Back Membranes

1. Apply a smooth even coating of Aqua Base 120 bonding adhesive to the substrate at the rate of 100 to 120 square feet per gallon and immediately roll the fleece back membrane into the wet adhesive. If adhesive has turned yellow in color, it is too dry and must be recoated with additional adhesive.

2. Once the membrane has been mated to the substrate, roll the membrane with a 100 to 150 lb weighted roller to ensure proper contact and 100% adhesion.

3. Cure rates are between 12 to 72 hours depending on porosity of substrate and weather conditions. Re-rolling of the membrane within 24 hours may be necessary if substrate is un-even or the sheet contains some fullness. Temporary weighting of the membrane may be necessary until the adhesive cures. Do not use Fleece Back PLUS membranes for the wet lay-in application.

4. Do not apply adhesive in seam lap areas that are to be heat welded.

Two-Sided Contact Application with Standard (non- fleece back) Membranes - Horizontal Surfaces

1. Apply a smooth, even coat of Aqua Base 120 bonding adhesive to the back side of the membrane and substrate. Do not apply adhesive in area of seam laps.

2. Coverage rate to be approximately:

   240 square feet per gallon for one surface (membrane or substrate only) or
   120 square feet per gallon per finished surface (membrane and substrate)

3. Allow adhesive to dry until it turns yellow and does not transfer to a dry finger or pull away from the substrate. Aqua Base 120 bonding adhesive will take a longer time to dry. Adhesive must be dry but still tacky (but not string) when the sheet is mated to the substrate. Do not allow to over dry.

4. Mate surfaces together avoiding wrinkles. Immediately roll the bonded area of the sheet with a 100 to 150 lbs roller to ensure full contact. It is important to thoroughly roll the membrane over all insulation joints. Repeat this procedure for remaining sheets.

5. Extended drying times can be expected during cool, overcast, humid, shaded, or late day applications. The adhesive must be dry (but still tacky) before mating surfaces to avoid permanent blisters due to trapped moisture or a lack of sufficient adhesion.

Standard Membrane (vertical walls two-sided contact application)

1. Apply a smooth, even coat of Aqua Base 120 bonding adhesive to the back side of the membrane and substrate. Do not apply adhesive in area of seam laps.

2. Coverage rate to be approximately:

   240 square feet per gallon for one surface (membrane or substrate only) or
   120 square feet per gallon per finished surface (membrane and substrate)

3. Allow adhesive to dry until it turns yellow and does not transfer to a dry finger or pull away from the substrate. **Aqua Base** 120 bonding adhesive will take a longer time to dry. Adhesive must be dry but still tacky (but not string) when the sheet is mated to the vertical surface. Do not allow to over dry.

4. Mate surfaces together avoiding wrinkles. Immediately roll the bonded area of the sheet with a 2-inch wide rubber hand roller to promote maximum positive contact between the membrane and the substrate. Overlap all adjacent flashing sheets a minimum of 2 inches. The Heat-Weld Membrane Flashings shall extend a minimum of 6 inches onto the field sheet and be securely adhered. There shall be a minimum 2 inches hot-air weld in front of the fastener plates. All side laps are to overlap a minimum of 2 inches.

5. Extended drying times can be expected during cool, overcast, humid, shaded, or late day applications. The adhesive must be dry (but still tacky) before mating surfaces to avoid permanent blisters due to trapped moisture or lack of sufficient adhesion...

Precautions

1. Review the applicable Material Safety Data Sheet for complete safety information prior to use.

2. Avoid breathing vapors. Keep container closed when not in use. Use with adequate ventilation. If inhaled, remove to fresh air.

3. If swallowed, **DO NOT INDUCE VOMITING.** Call a physician immediately.

4. Avoid contact with skin. Wash hands thoroughly after handling. In case of contact with skin, thoroughly wash affected area with soap and water.

5. Avoid contact with eyes. Safety glasses or goggles are recommended. If splashed in eyes, immediately flush eyes with plenty of clean water for at least 15 minutes. Contact a physician immediately.

6. Do not thin Aqua Base 120. Thinning will affect performance and may coagulate the adhesive.

7. Aqua Base 120 will turn to a yellow cast when completely dry. Dry time is dependent upon ambient conditions.

8. Open containers of Aqua Base 120 should be used within 48 hours. Adhesive will form a thick skin in the container that will not dissolve. Remaining adhesive can be used once the skinned layer has been removed.

9. Extended drying times can be expected in cool or humid conditions as well as shaded areas. Not allowing the adhesive to properly dry in a two-sided contact adhesive application will result in poor adhesive strength and/or blisters occurring over time.

10. Keep out of reach of children.

STORAGE & HANDLING

DO NOT ALLOW Aqua Base 120 TO FREEZE. Frozen product is un-usable and must be discarded.

Job site storage in excess of 90°F (32°C) may affect product shelf life. Do not store below 40°F.

PROTECTION & SAFETY

Mule-Hide maintains Safety Data Sheets on all of its non-exempt products. Safety Data Sheets contain health and safety information for your development of appropriate product handling procedures to protect your employees and customers. Mule-Hide's Safety Data Sheets should be read and understood by all of your supervisory personnel and employees before using Mule-Hide products in your facilities.

ADDITIONAL INFORMATION

The information given on this PDS is subject to change without notice. Always check the Mule-Hide website at www.mulehide.com for the latest information, changes and updates or contact Mule-Hide Products Company at 800-786-1492.

DISCLAIMER

The statements provided concerning the material shown are intended as a guide for material usage and are believed to be true and accurate at the time of printing. No statement made by anyone may supersede this information, except when done in writing by Mule-Hide Products Co., Inc. Since the manner of use is beyond our control, Mule-Hide does not authorize anyone to make any warranty of merchantability or fitness for any particular purpose or any other warranty, guarantee or representation, expressed or implied, concerning this material. This product may be eligible for a Mule-Hide warranty, please check the Mule-Hide website at www.mulehide.com or contact Mule-Hide directly at 800-786-1492 for details. Buyer and user accept the product under these conditions and assume the risk of any failure, any injury person or property (including that of the user), loss or liability resulting from the handling, storage or use of the product whether or not it is handled, stored or used in accordance with the directions or specifications. Mule-Hide must be notified in writing of any claims and be given the opportunity to inspect the alleged failure before repairs are made.

Product Data Sheet

HYDROBOND™ WATER-BASED PVC BONDING ADHESIVE

PRODUCT DESCRIPTION

HydroBond™ Water-Based PVC Bonding Adhesive is designed to bond PVC membranes to a clean, dry horizontal surface as a wet lay-in adhesive with slopes up to 2:12. HydroBond can be used with standard PVC, PVC Fleece Back and PVC KEE Fleece Back membranes. This product can also be used as a contact adhesive for vertical applications, such as flashings. This water-based adhesive is specially formulated to be in compliance with the state of California Clean Air Act of 1988 (updated in 1997) and as further regulated by California's Air Quality Control Districts listing VOC limitations. This product also meets the requirements of the OTC Model Rule for Single Ply Roofing Adhesive.

BASIC USES

HydroBond Water-Based PVC Bonding Adhesive is used for bonding PVC standard, PVC Fleece Back and PVC KEE Fleece Back membranes and PVC standard flashings to a variety of substrates.

Not for use with PVC KEE standard (non-fleece back) membranes.

TYPICAL PHYSICAL PROPERTIES

Typical Properties and Characteristics*	
Color	Light Tan
Avg. Net Weight	9 lbs / gallon
Packaging	5 Gallon Pail
Shelf Life	1 year

LEED Information	
Pre-consumer Recycled Content	N/A
Post-consumer Recycled Content	N/A
VOC Content	<120.5 g/l
Manufacturing Location	Ohio

*General properties. Typical properties and characteristics are based on samples tested and are not guaranteed for all samples of this product. This data and information is intended as a guide and does not reflect the specification or specification range for any particular property of this product

BENEFITS & SUPPLEMENTAL STATEMENTS

- Single sided, wet lay-in application save time and labor
- Long lasting, high-strength bond
- No HAZMAT restrictions
- Applies quickly with medium nap roller
- 12-month shelf life (sealed container)
- May be used as a component in Mule-Hide warranted systems up to 20 years

COVERAGE RATES

Substrate	Roller (SF / Gallon)	Spray (SF / Gallon)
Standard PVC Membrane application rates (not for use with PVC KEE membrane)		
Polyiso – Paper or Glass Facer	100 sf / gal (2.47 m^2 / L)	133 sf / gal (3.27 m^2 / L)
Dens Deck Prime or SECUROCK		
Plywood		
Fleece Back Membrane application rates (either PVC or PVC KEE)		
Polyiso – Paper or Glass Facer	100 sf / gal (2.47 m^2 / L)	133 sf / gal (3.27 m^2 / L)
Dens Deck Prime or SECUROCK		
Plywood		
Concrete or Cellular deck	100 sf / gal (2.47 m^2 / L)	100 sf / gal (2.47 m^2 / L)

CODE APPROVALS/COMPLIANCE

A variety of Factory Mutual Ratings and Underwriter Laboratory Classifications are available. Contact Mule-Hide Technical Department for additional information.

INSTALLATION TEMPERATURE

HydroBond adhesive can only be used when temperatures are 40°F and rising, and should not be used when temperatures are expected to fall below 40ºF during the 72 hour curing period.

INSTALLATION INSTRUCTIONS

Surface Preparation

1. The surface, on or against which adhesive is to be applied, shall be clean, smooth, dry, free of fins, sharp edges, loose and foreign materials, oil and grease. Depressions greater than 1/4" (6 mm) should be feathered; using epoxy, mortar or other approved patching material. All sharp projections shall be removed by sweeping, blowing or vacuum cleaning.

Application (PVC Standard, PVC Fleece Back or PVC KEE Fleece Back membranes)

1. Prepare the membrane by positioning the roll. Unroll the membrane completely to achieve the required overlap. Roll up the membrane in preparation for adhesive application. Do not use the 'barn door' method as this may result in long open times allowing the HydroBond to dry. HydroBond is designed as a one-sided, WET lay-in adhesive with no flash-off time and adhesive must not be allowed to dry during the field application process.

2. HydroBond can be applied to the substrate using either an airless spray machine or a medium nap roller. Ensure that adhesive is not applied to the seam area. It is recommended that adhesive is applied no more than 3' to 4' in front of the roll to prevent drying. Drying can occur rapidly in high temperatures. Ensure that adhesive has not dried before the membrane is rolled into place. To ensure a wet lay-in, adjust application technique according to weather conditions. Avoid heavy or light applications of adhesive as the adhesive performance will be affected.

3. Roll the membrane into the WET adhesive coated substrate while avoiding wrinkles. Immediately broom the membrane starting from the center of the sheet and working out to the sides of the sheet using a soft bristle push broom to work out any air bubbles. Immediately after brooming, roll the adhered membrane in two directions using a criss cross pattern using a 75-lb split steel roller. Brooming and rolling of the membrane is required and must occur immediately after the membrane is placed into the wet adhesive.

Standard Membrane (vertical flashings – two sided contact method) (PVC only, not for PVC KEE)

It is recommended that vertical flashings be adhered with Low-VOC PVC Bonding Adhesive whenever possible. If Low-VOC PVC Bonding Adhesive cannot be used, then our HydroBOND adhesive can be used as a two sided contact adhesive for vertical flashings.

1. Follow the coverage rates listed above for the specific surface and membrane. Using a 9" medium nap roller, apply the HydroBond as a two-sided application using approximately half the application on the substrate and half the application on the membrane.

2. Let the adhesive dry until the adhesive strings when touched with a dry finger. This may take as long as 10-15 minutes on a warm day or more than 30 minutes in cool temperatures.

3. Once the adhesive has developed strings as described above, set the membrane in place ensuring full contact with the substrate. Roll the membrane with a 3"-wide silicone roller to ensure full adhesion.

Standard Membrane (continued)

4. Once adhered, the membrane flashing should be mechanically secured along the top edge. The mechanical attachment must be completed before the end of the work day. Roll the membrane a second time after mechanical attachment to ensure proper adhesion and contact.

REVIEW CURRENT MULE-HIDE SPECIFICATIONS AND DETAILS FOR SPECIFIC APPLICATION REQUIREMENTS.

PRECAUTIONS

1. Review the applicable Safety Data Sheet for complete safety information prior to use.
2. Keep container closed when not in use. Use with adequate ventilation.
3. If swallowed, **DO NOT INDUCE VOMITING.** Call a physician immediately.
4. Avoid contact with eyes. Safety glasses or goggles are recommended. If splashed in eyes, immediately flush eyes with plenty of clean water for at least 15 minutes. Contact a physician immediately.
5. Avoid contact with skin. Occasional contact with hands or skin does not result in significant irritation unless it is not allowed to evaporate. Prolonged contact may cause irritation and dermatitis. Wash your hand thoroughly after handling.
6. Job site storage temperatures in excess of 99ºF (37ºC) may affect product shelf life. DO NOT ALLOW PRODUCT TO FREEZE. Do not store at temperatures below 40ºF.
7. Do not thin HydroBond Adhesive. Thinning will adversely affect performance.
8. HydroBond adhesive can only be used when temperatures are 40°F and rising. Do not apply if ambient temperature will drop below 40ºF during the 72 hour curing period.
9. Adjust application technique according to weather conditions to ensure proper application.
10. **KEEP OUT OF REACH OF CHILDREN.**

PROTECTION & SAFETY

Mule-Hide maintains Safety Data Sheets on all of its non-exempt products. Safety Data Sheets contain health and safety information for your development of appropriate product handling procedures to protect your employees and customers. Mule-Hide's Safety Data Sheets should be read and understood by all of your supervisory personnel and employees before using Mule-Hide products in your facilities.

ADDITIONAL INFORMATION

The information given on this PDS is subject to change without notice. Always check the Mule-Hide website at www.mulehide.com for the latest information, changes and updates or contact Mule-Hide Products Company at 800-786-1492.

DISCLAIMER

The statements provided concerning the material shown are intended as a guide for material usage and are believed to be true and accurate at the time of printing. No statement made by anyone may supersede this information, except when done in writing by Mule-Hide Products Co., Inc. Since the manner of use is beyond our control, Mule-Hide does not authorize anyone to make any warranty of merchantability or fitness for any particular purpose or any other warranty, guarantee or representation, expressed or implied, concerning this material. This product may be eligible for a Mule-Hide warranty, please check the Mule-Hide website at www.mulehide.com or contact Mule-Hide directly at 800-786-1492 for details. Buyer and user accept the product under these conditions and assume the risk of any failure, any injury person or property (including that of the user), loss or liability resulting from the handling, storage or use of the product whether or not it is handled, stored or used in accordance with the directions or specifications. Mule-Hide must be notified in writing of any claims and be given the opportunity to inspect the alleged failure before repairs are made.

AeroWeb PVC

Low-VOC Aerosol Contact Adhesive

PRODUCT DATA SHEET

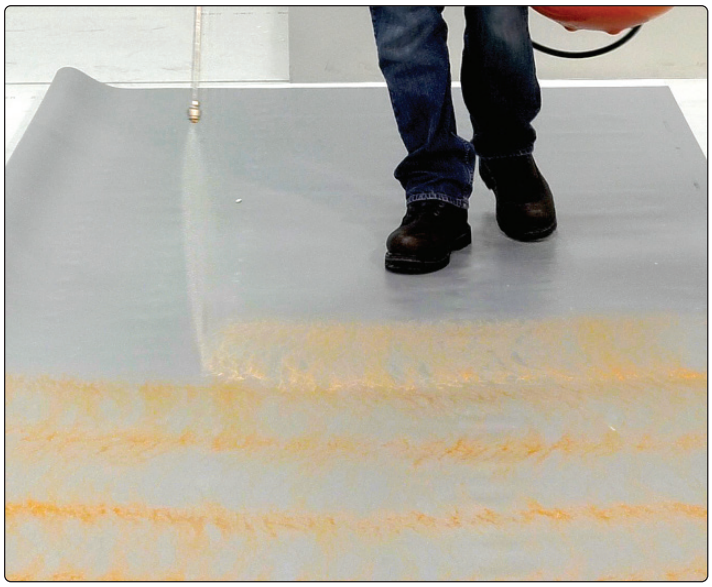

ACCEPTABLE MEMBRANES AND APPLICATIONS		
Membrane	**Wall**	**Field**
TPO	No	No
EPDM	No	No
PVC (bareback)*	Yes	Yes
KEE	No	No
Fleece Back**	Yes	No

*Contact Mule-Hide Technical Department for project requirements
**Not for use with TPO Fleece Back FR

PACKAGING	
PRODUCT	**SIZE/WEIGHT**
AeroWeb PVC	Aerosol Cylinder, 12" dia. x 18" tall Weight: 41 lbs. of Adhesive
6' Hose	6' Length
12' Hose	12' Length
18' Hose	18' Length
Spray Gun Adjustable	--
Spray Gun with 24" Extension	--
PVC Un-Tack	#8 Aerosol Cylinder

Important Note: AeroWeb PVC, PVC Un-Tack, hoses and gun are each sold separately.

DESCRIPTION

Mule-Hide's AeroWeb PVC is a low-VOC Aerosol Contact Adhesive that can be used for a variety of applications: adhering PVC bareback membranes to a variety of horizontal substrates and vertical walls, and adhering Fleece Back membranes to vertical surfaces. AeroWeb PVC cannot be used with any KEE bareback membranes.

AeroWeb PVC's low-VOC formula promotes tenacious adhesion and quick drying in a wide range of temperatures. Applied using a self-contained spray system that provides quick and even coverage, this system requires minimal cleanup or maintenance.

Please note: cylinder, hoses, and gun are each sold separately.

PRODUCTIVITY BOOSTING FEATURES AND BENEFITS

- Quick application with spray gun
- Fast tack time
- No stirring
- Up to 60% labor savings compared to traditional bonding adhesive

FEATURES AND BENEFITS

- Adhering Fleece Back (vertical application only)
- Can be used in temperatures as low as 35°F
- Easy setup
- Easy cleanup
- Low odor and Low-VOC

INSTALLATION INSTRUCTIONS

1. Connect spray gun to hose and connect hose to cylinder. Use lithium grease or petroleum jelly on all fittings and be careful to avoid cross-threading. Open valve on cylinder to check fittings for leaks. **Keep cylinder valve open to maintain pressure in the hose/ spray gun when not in use.**
2. AeroWeb PVC can be applied at ambient temperature of 35°F and above. Propellant in cylinders must be kept above 70°F for the product to spray properly. Utilize power-heated blanket, and hot boxes when necessary. Ensure that cylinder temperatures stay below 110°F Substrate shall be clean, dry, and free of debris and contaminants.
3. For applications taking place in ambient temperature below 70°F, store cylinders in heated space and move to project area during application. Cylinders must be kept warm on the jobsite. Dispense product from cylinder while it is still warm. When product in cylinder becomes too cold, it will begin to spit rather than spray. If this occurs, swap cold cylinder for warmer one and return cold cylinder to heated area. When changing cylinder, close the valve on the cylinder and depressurize the hose. Remove the hose and attach to the new cylinder. Open valve and do a test spray.
4. Apply AeroWeb PVC in an even coat to substrate (refer to the drawing on the next page), keeping the spray tip approximately 12" (30.5 cm) away and perpendicular to the surface during spray. Avoid high thickness buildup.

AeroWeb PVC

Low-VOC Aerosol Contact Adhesive

PRODUCT DATA SHEET

5. Allow AeroWeb PVC to flash-off (roughly 5 – 7 minutes depending upon ambient temperature). Once flashed off, adhesive will have little to no tackiness and provides an application window of roughly 15-20 minutes depending upon ambient temperature. Limit application of AeroWeb PVC to surfaces that will be covered with membrane.

Vertical Applications of bareback PVC membrane, or any Fleece Back membrane*:

*Note: Not for use with TPO Fleece Back FR

Acceptable substrates include: Mule-Hide Poly ISO roof insulation, Poly ISO 1-HD, DensDeck® Prime, SECUROCK®, OSB, plywood, metal, residual asphalt, and clean concrete block. To improve adhesion and reduce the potential for asphalt bleed-through on vertical surfaces with residual asphalt, apply an initial "sealing" base coat of AeroWeb PVC and allow to flash off properly; then, apply a secondary coating of AeroWeb PVC to the vertical surface. Contact Mule-Hide Technical Department before using on substrates other than those recommended above.

There are no height restrictions when using AeroWeb PVC for vertical applications if the appropriate membrane terminations are utilized.

1. Spray wall and back of the membrane, utilizing a 50% overlapping spray pattern.
2. Do not apply adhesive to splice areas.
3. Allow adhesive to become tacky but not overly dry; it should not transfer to fingers when touched.
4. Mate membrane with the wall from the center of the sheet towards the edges, smoothing by hand.
5. Broom the membrane with a soft-bristle broom.
6. Roll in with a hand roller.

Horizontal Application of bareback PVC Membranes

Acceptable substrates include: Mule-Hide Poly ISO roof insulation, Poly ISO 1-HD, DensDeck Prime, SECUROCK, OSB, and plywood. Please see Mule-Hide's PVC Specification for a complete list of acceptable substrates.

The surface, on or against which adhesive is to be applied, shall be clean, smooth, dry, free of films, sharp edges, loose and foreign materials, oil and grease. Depressions greater than ¼" (6 mm) should be feathered, using epoxy, mortar or other approved patching material. All sharp projections shall be removed by sweeping, blowing or vacuum cleaning.

Application shall be continuous and uniform, avoiding globs or puddles.

1. Spray substrate and back of the membrane with enough overlap to ensure 100% coverage (2"-3" of overlap).
2. Do not apply adhesive to splice areas to be hot-air welded.
3. Allow adhesive to become tacky but not overly dry; it should not transfer to fingers when touched.
4. Roll the membrane onto the adhesive-coated substrate while avoiding wrinkles. Immediately brush down the bonded portion of the sheet with a soft-bristle push broom, and then roll the membrane with a clean, dry roller (minimum 75 lb. to maximum 150 lb.) to achieve maximum contact.

Review Mule-Hide specifications and details for complete installation information.

CLEAN UP

PVC UN-TACK™ safe solvent or mineral spirits can be used to clean tools and surfaces. If the spray gun valve becomes stuck, attach hose and spray gun to cylinder of Citrus Cleaner or PVC UN-TACK and trigger spray gun repeatedly until operation is smooth. If the spray gun is clogged, a small-gauge wire or torch clean-out tool is helpful after soaking the brass fitting in PVC UN-TACK.

STORAGE AND HANDLING

Store cylinders in protected, conditioned space with temperature maintained above 70°F. Do not store cylinders in areas where temperatures reach 110°F or higher. Contents are flammable. Store in accordance with local, state, and federal regulations. Keep cylinder valve open to maintain pressure in the hose and spray gun. Periodically spray in a safe manner to help prevent possible clogging. Keep spray gun trigger locked when not in use. Flush gun and hose with PVC UN-TACK for long-term storage beyond 30 days.

TYPICAL PROPERTIES AND CHARACTIERISTICS

PHYSICAL PROPERTY	TYPICAL VALUE
Color	Burnt Orange
Consistency	Aerosol Spray
Spray Pattern	Variable Web
Odor	Low
Base	Synthetic Rubber/Resin Blend
Solvent	Acetone
Coverage Rate	1-Sided Primer - 1,500-2,000 ft^2* 2-Sided Adhesive - Walls - 400ft^2* 2-Sided Adhesive - Field - 750ft^2*
Tack Time	5 minutes**
Adhesion	Excellent
Service Temperature	-30°F-200°F (-34°C to 93°C)
Flammablility	Flammable when wet. Non-flammable when dry.
Water Resistance	Excellent
Midew Resistance	Excellent
Shelf Life	12 months (unopened container)

*Approximate Coverage
**or longer depending on climate conditions

AeroWeb PVC

Low-VOC Aerosol Contact Adhesive

PRODUCT DATA SHEET

LEED INFORMATION	
Pre-consumer Recycled Content	0%
Post-consumer Recycled Content	0%
Manufacturing Location	Lynchburg, VA
VOC	248 g/L

PRECAUTIONS

AeroWeb PVC is a flammable liquid propellant and vapor. Vapors are heavier than air and may travel along the ground or may be moved by ventilation and ignited by pilot lights, other flames, sparks, heaters, smoking, electrical motors, static discharge, or other ignition sources at locations distant from the material handling point and flashback. Keep away from open flame. Use with adequate ventilation. Avoid inhalation of spray mist or vapors. Harmful or fatal if swallowed. May cause eye irritation. Keep out of reach of children.

Review Safety Data Sheet for complete safety information prior to use. Use of goggles and gloves is required. Aerosol cylinders are not refillable and when empty are harmless and disposable. Dispose according to local codes and laws. Read safety precautions and warnings on cylinder label. Wear gloves and goggles before using this product. Do not aim spray gun at people or animals at any time. PPE Gloves must be used while handling material.

CYLINDER DISPOSAL

When all adhesive in the cylinder has been used, close cylinder valve and evacuate hose and spray gun before disconnecting hose from cylinder. If hose is not to be connected to a new cylinder immediately, do not evacuate hose and spray gun to ensure material does not harden in spray gun and hose. Clean up adhesive residue, spray gun, and spray tips with PVC UN-TACK or mineral spirits. In most areas, the empty cylinder can be disposed as an aerosol can or recycled as scrap metal. If disposal is not allowed in your area, contact your distributor for disposal arrangements. Federal law forbids transportation if refilled.

PROTECTION & SAFETY

Mule-Hide maintains Safety Data Sheets on all of its non-exempt products. Safety Data Sheets contain health and safety information for your development of appropriate product handling procedures to protect your employees and customers. Mule-Hide's Safety Data Sheets should be read and understood by all of your supervisory personnel and employees before using Mule-Hide products in your facilities.

For industrial professional use only.

ADDITIONAL INFORMATION

On projects where a Mule-Hide Standard or Premium Warranty is requested, an authorized Mule-hide representative shall inspect all completed work.

The information given on this PDS is subject to change without notice. Always check the Mule-Hide website at www.mulehide.com for the latest information, changes and updates or contact Mule-Hide Products Company at 800-786-1492.

DISCLAIMER

The statements provided concerning the material shown are intended as a guide for material usage and are believed to be true and accurate at the time of printing. No statement made by anyone may supersede this information, except when done in writing by Mule-Hide Products Co., Inc. Since the manner of use is beyond our control, Mule-Hide does not authorize anyone to make any warranty of merchantability or fitness for any particular purpose or any other warranty, guarantee or representation, expressed or implied, concerning this material. This product may be eligible for a Mule-Hide warranty, please check the Mule-Hide website at www.mulehide.com or contact Mule-Hide directly at 800-786-1492 for details. Buyer and user accept the product under these conditions and assume the risk of any failure, any injury person or property (including that of the user), loss or liability resulting from the handling, storage or use of the product whether or not it is handled, stored or used in accordance with the directions or specifications. Mule-Hide must be notified in writing of any claims and be given the opportunity to inspect the alleged failure before repairs are made

Product Data Sheet

MULE-HIDE PVC NON-REINFORCED FLASHING

PRODUCT DESCRIPTION

Mule-Hide PVC Non-Reinforced Flashing is a non-reinforced thermoplastic poly vinyl chloride based membrane.

BASIC USES

Mule-Hide PVC Non-Reinforced Flashing is used for sealing joints of Mule-Hide PVC Coated Metal, drain details and field flashing pipes and other details where reinforced membrane or the used of pre-molded accessories are not feasible.

TYPICAL PHYSICAL PROPERTIES

Property*	Test Method	Specification
Tolerance on nominal Thickness, %	ASTM D 751	+/- 8
Tensile Strength, min psi	ASTM D 638	1500
Elongation, ultimate, min %	ASTM D 638	250/200
Weight, lb/ft^2, typical	--	.51 lb/ft^2
Tear strength, min., lbf/in	ASTM D 1004	10
Heat aging: 28 days % Retention	ASTM D 4434	90
Resistance to Xenon-arc weathering Xenon-arc, 5040 kJ/m^2 total Radiant exposure, visual Condition at 7X	ASTM D 4434	No cracking/crazing Negligible discoloration

* Typical properties and characteristics are based on samples tested and are not guaranteed for all samples of this product. This data and information is intended as a guide and does not reflect the specification or specification range for any particular property of this product.

COLORS

Available in White/Gray and White/Tan

PACKAGING

12” x 50’ roll
24” x 50’ roll

INSTALLATION INSTRUCTIONS

1. Mule-Hide PVC Flashing is used to flash a variety of roofing structures and penetrations and specific installation methods will vary. Refer to the appropriate Mule-Hide specification and/or detail for specific installation information.
2. A lower heat setting is required on the heat welder when hot air welding the un-reinforced flashing membrane. A typical starting setting is 6, on a scale of 1 to10.
3. Use the edge of the roller to crease the flashing into any membrane step-offs to achieve a proper seal.

PRECAUTIONS

1. Review the applicable Material Safety Data Sheet for complete safety information prior to use.
2. UV filtering sunglasses are strongly recommended when working with Mule-Hide PVC roofing systems.
3. Store Mule-Hide PVC Flashing in a cool, shaded area and cover with light-colored, breathable, waterproof tarpaulins.
4. PVC Flashing material that has been exposed to the weather for approximately 7 days or longer prior to use must be prepared with PVC Membrane Cleaner prior to hot-air welding.

PROTECTION & SAFETY

Mule-Hide maintains Safety Data Sheets on all of its non-exempt products. Safety Data Sheets contain health and safety information for your development of appropriate product handling procedures to protect your employees and customers. Mule-Hide's Safety Data Sheets should be read and understood by all of your supervisory personnel and employees before using Mule-Hide products in your facilities.

ADDITIONAL INFORMATION

The information given on this PDS is subject to change without notice. Always check the Mule-Hide website at www.mulehide.com for the latest information, changes and updates or contact Mule-Hide Products Company at 800-786-1492.

DISCLAIMER

The statements provided concerning the material shown are intended as a guide for material usage and are believed to be true and accurate at the time of printing. No statement made by anyone may supersede this information, except when done in writing by Mule-Hide Products Co., Inc. Since the manner of use is beyond our control, Mule-Hide does not authorize anyone to make any warranty of merchantability or fitness for any particular purpose or any other warranty, guarantee or representation, expressed or implied, concerning this material. Buyer and user accept the product under these conditions and assume the risk of any failure, any injury person or property (including that of the user), loss or liability resulting from the handling, storage or use of the product whether or not it is handled, stored or used in accordance with the directions or specifications. Mule-Hide must be notified in writing of any claims and be given the opportunity to inspect the alleged failure before repairs are made.

Product Data Sheet

PVC COVERSTRIP

PRODUCT DESCRIPTION

Rev 3-19

Mule-Hide's PVC Coverstrip is a nominal 80-mil (2.03 mm) polyester reinforced thermoplastic polyvinyl chloride-based membrane used for stripping in rows of fasteners and covering the butt joints of PVC and PVC Fleece Back membranes. The 8" x 75' rolls are available in white, gray and tan colors. This product's smooth surface allows a total surface fusion weld over a wide temperature range, facilitating a consistent, watertight roofing system.

Note: PVC Coverstrip ***cannot*** be used to flash corners, pipes, t-joints, any angled metal flanges such as gravel stops or other canted metal edgings.

TYPICAL PHYSICAL PROPERTIES

Physical Property*	Typical
Weight, lbs/ft^2 (kg/m^2)	0.55 (2.68)
Breaking Strength (MD x CD), lbf/in (kN/m) ASTM D751 grab method	360 x 330 (63 x 58)
Elongation break of reinforcement (MD x CD) % ASTM D751 grab method	30 x 30
Seam Strength, min. ASTM D751 grab method (min 75% of breaking strength)	Pass
Field Seam Strength, lbf/in (kN/m) ASTM D1876 tested in peel	25 (4.4) min 60 (10.6)
Tearing Strength (MD x CD), lbf (N) ASTM D751 proc. B, 8" x 8"	100 x 132 (445 x 587)
Low Temperature Bend, no cracks @5x ASTM D2136	Pass -40ºF (-40ºC)
Linear Dimensional Change % ASTM D1204, 6 hours @ 176° F (80° C)	0.4 typ
Ozone Resistance, no cracks @ 7x ASTM D1149, 100 pphm, 168 hrs.	Pass
Water absorption resistance, mass % ASTM D570 166 hrs @ 158° F (70° C)	2.0 typ
Water Vapor Permeance, Perms ASTM E96 proc. B	0.10 max 0.05 typ
Puncture resistance Federal lbf (kN) FTM 101C, method 2031 Dynamic, J (ft-lb) ASTM D5635 Static, lbf (N) ASTM D5602	 380 typ PASS PASS
Properties after heat aging ASTM D3045, 56 days @ 176ºF Breaking strength % retained Elongation rein., % retained	 90 min 90 min
Xenon-Arc Resistance, no cracks / crazing @ 10x, ASTM G155 0.35W/m^2 @ 340-nm, 63°C B.P.T. 12,600 kJ/m^2 total radiant exposure 10,000 hours	PASS

*Typical properties and characteristics are based on samples tested and are not guaranteed for all samples of this product. This data and information is intended as a guide and does not reflect the specification range for any particular property of this product. PVC meets or exceeds the requirements of ASTM D4434 Standard Specification for Poly (Vinyl Chloride) Sheet Roofing. PVC is classified as Type III as defined by ASTM D4434.

LEED Information	
Pre-consumer Recycled Content	10%
Post-consumer Recycled Content	0%
Manufacturing Location	Greenville, IL
Solar Reflectance Index (SRI)	White: 111

BENEFITS & SUPPLEMENTAL STATEMENTS

- Wide window of weldability for ease of installation
- Excellent chemical resistance
- Resistant to impacts and punctures
- Outstanding solar, UV, ozone and oxidation resistance, and low-temperature flexibility
- Available in White, Gray and Tan

INSTALLATION INSTRUCTIONS

1. Ensure that existing PVC membrane and PVC Coated Metal surfaces are clean prior to welding PVC Coverstrip in place. If dirt is present, use Mule-Hide PVC Membrane Cleaner to properly clean the surfaces.
2. Cut PVC Coverstrip to proper length and center over the row of fasteners and plates to be covered. Maintain a minimum 1 ½" (3.8 cm) width of coverstrip on both sides of plates.
3. Tack weld to hold in place, then weld PVC Coverstrip in place using either an auto-welder or a hand-welder. Weld all edges of the coverstrip with a minimum 1 ½" wide weld to ensure a watertight seal.
4. Allow weld to cool and then probe for voids. Repair voids by heat welding.

Review Mule-Hide specifications for additional installation information.

PRECAUTIONS

- Surfaces may be slippery when wet, or due to frost and ice build-up. Exercise caution to prevent falls.
- Mule-Hide PVC membrane systems are highly reflective to sunlight. Workers should dress appropriately, wear sunscreen, and wear sunglasses that filter out UV light.
- Exercise care when working near roof edge. Roof edges may not be visible when surrounding area is covered with snow.
- Store Mule-Hide membrane in original wrappings in a cool, shaded area. Cover with light-colored, breathable, waterproof tarpaulins. Mule-Hide membrane that has been exposed to the elements for approximately 7 days or longer must be prepared with Weathered Membrane Cleaner prior to hot air welding.

PROTECTION & SAFETY

Mule-Hide maintains Safety Data Sheets on all of its non-exempt products. Safety Data Sheets contain health and safety information for your development of appropriate product handling procedures to protect your employees and customers. Mule-Hide's Safety Data Sheets should be read and understood by all of your supervisory personnel and employees before using Mule-Hide products in your facilities.

ADDITIONAL INFORMATION

The information given on this PDS is subject to change without notice. Always check the Mule-Hide website at www.mulehide.com for the latest information, changes and updates or contact Mule-Hide Products Company at 800-786-1492.

DISCLAIMER

The statements provided concerning the material shown are intended as a guide for material usage and are believed to be true and accurate at the time of printing. No statement made by anyone may supersede this information, except when done in writing by Mule-Hide Products Co., Inc. Since the manner of use is beyond our control, Mule-Hide does not authorize anyone to make any warranty of merchantability or fitness for any particular purpose or any other warranty, guarantee or representation, expressed or implied, concerning this material. Buyer and user accept the product under these conditions and assume the risk of any failure, any injury person or property (including that of the user), loss or liability resulting from the handling, storage or use of the product whether or not it is handled, stored or used in accordance with the directions or specifications. Mule-Hide must be notified in writing of any claims and be given the opportunity to inspect the alleged failure before repairs are made.

Product Data Sheet

PVC T-JOINT COVERS

PRODUCT DESCRIPTION

PVC T-Joint Covers are made from 60-mil non-reinforced White, and 40-mil Gray and Tan, cut into a 4.5" diameter circle.

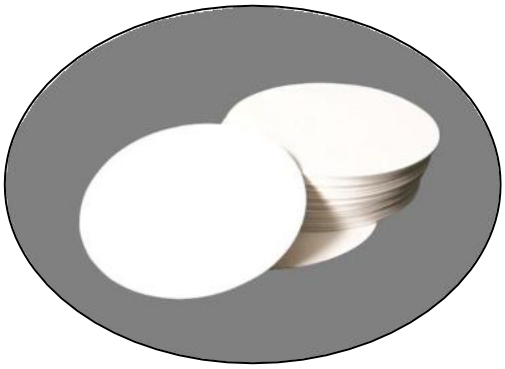

BASIC USES

PVC T-Joint Covers are used to seal step-offs at splice intersections. Installation is mandatory on all 60-mil and 80-mil PVC systems and on 50-mil systems where step-offs have not been properly sealed.

TYPICAL PHYSICAL PROPERTIES

Typical Properties*	
Size	4.5" (114 mm)
Thickness	.060" (1.52 mm) White .040" (1.02 mm) Tan/Gray
Packaging	100 pieces per box
Weight	3.5 lbs (1.6 kg) per box
Material	Non-Reinforced PVC
Colors	White, Gray and Tan

LEED Information	
Pre-consumer Recycled Content	0%
Post-consumer Recycled Content	0%
Manufacturing Location	Eugene, OR Bloomingdale, IL
Solar Reflectance Index (SRI)	White: 111 Gray: 43 Tan: 50

*Typical properties and characteristics are based on samples tested and are not guaranteed for all samples of this product. This data and information is intended as a guide and does not reflect the specification range for any particular property of this product.

BENEFITS

- More consistent performance compared to hand cutting
- Every T-Joint Patch is a perfect 4.5" diameter circle
- Offers labor savings compared to hand cut flashings
- Seals channels at splice intersections created by seam step-offs

INSTALLATION INSTRUCTIONS

1. If membrane has been exposed to the weather, clean splice intersection area with PVC Membrane Cleaner.
2. Use a lower temperature setting on the hand heat welder than that used for welding reinforced PVC membrane. (Typically a setting of "6" on a scale of "10" is appropriate for welding PVC T-Joint Covers.)
3. Center the T-Joint Cover over the splice intersection, begin welding at the center point and work towards the outside. Use the edge of the roller to crease the T-Joint cover into membrane step-offs to achieve a proper seal.
4. Using a probe, check all splices for voids and cold welds only once the T-Joint Cover has completely cooled. Make any needed repairs.

Review Mule-Hide specifications and details for additional information.

PRECAUTIONS

1. Do not use PVC T-Joint Cover to overlay fasteners and plates as reinforced membrane is required to overlay fasteners and plates.

STORAGE & HANDLING

1. Store T-Joint Covers in a cool, shaded area and cover with light-colored, breathable, waterproof tarpaulins.
2. T-Joint Covers that have been exposed to the weather must be prepared with PVC Membrane Cleaner before hot-air welding.

PROTECTION & SAFETY

Mule-Hide maintains Safety Data Sheets on all of its non-exempt products. Safety Data Sheets contain health and safety information for your development of appropriate product handling procedures to protect your employees and customers. Mule-Hide's Safety Data Sheets should be read and understood by all of your supervisory personnel and employees before using Mule-Hide products in your facilities.

ADDITIONAL INFORMATION

The information given on this PDS is subject to change without notice. Always check the Mule-Hide website at www.mulehide.com for the latest information, changes and updates or contact Mule-Hide Products Company at 800-786-1492.

DISCLAIMER

The statements provided concerning the material shown are intended as a guide for material usage and are believed to be true and accurate at the time of printing. No statement made by anyone may supersede this information, except when done in writing by Mule-Hide Products Co., Inc. Since the manner of use is beyond our control, Mule-Hide does not authorize anyone to make any warranty of merchantability or fitness for any particular purpose or any other warranty, guarantee or representation, expressed or implied, concerning this material. Buyer and user accept the product under these conditions and assume the risk of any failure, any injury person or property (including that of the user), loss or liability resulting from the handling, storage or use of the product whether or not it is handled, stored or used in accordance with the directions or specifications. Mule-Hide must be notified in writing of any claims and be given the opportunity to inspect the alleged failure before repairs are made.

Product Data Sheet

PVC INSIDE CORNERS

PRODUCT DESCRIPTION

PVC Inside Corners are pre-molded from non-reinforced PVC (polyolefin) membrane.

BASIC USES

PVC Inside Corners are uniform in shape and size and provide water tightness at inside corners formed by PVC coated metal and/or PVC flashing membrane. They provide a neat, finished look to building corners, curbs and parapet flashings with no cutting required.

TYPICAL PHYSICAL PROPERTIES

Typical Properties*	
Color:	White, Gray & Tan
Material:	Non-reinforced molded PVC
Thickness:	.060" (1.52mm)
Packaging:	12 pieces per bag

LEED Information	
Pre-consumer Recycled Content	0%
Post-consumer Recycled Content	0%
Manufacturing Location	Bloomingdale, IL
Solar Reflectance Index (SRI)	White: 111 Gray: 43 Tan: 50

*Typical properties and characteristics are based on samples tested and are not guaranteed for all samples of this product. This data and information is intended as a guide and does not reflect the specification range for any particular property of this product.

BENEFITS

- More consistent performance compared to hand cutting
- Forms easily to flash “out of square” corners that are not exactly 90 degrees
- Offers labor savings compared to hand cut flashings

INSTALLATION INSTRUCTIONS

1. If membrane has been exposed to the weather, clean splice intersection area with PVC Membrane Cleaner.
2. Use a lower temperature setting on the hand heat welder than that used for welding reinforced PVC membrane.
3. Position PVC Inside Corner into the building corner and begin welding at the innermost corner point and work away from the corner.
4. Use the roller edge to crease the corner flashing into any membrane step-off to create a proper seal.
5. Using a probe, check all splices for voids and cold welds only once the PVC Inside corner has completely cooled. Make any needed repairs.

Review Mule-Hide specifications and details for additional information.

STORAGE

Corners should be stored in a clean, dry area and protected from extreme temperatures. PVC Outside Corners or PVC membranes that have been exposed to the weather or contaminated with dirt must be prepared with PVC Membrane Cleaner.

PROTECTION & SAFETY

Mule-Hide maintains Safety Data Sheets on all of its non-exempt products. Safety Data Sheets contain health and safety information for your development of appropriate product handling procedures to protect your employees and customers. Mule-Hide's Safety Data Sheets should be read and understood by all of your supervisory personnel and employees before using Mule-Hide products in your facilities.

ADDITIONAL INFORMATION

The information given on this PDS is subject to change without notice. Always check the Mule-Hide website at www.mulehide.com for the latest information, changes and updates or contact Mule-Hide Products Company at 800-786-1492.

DISCLAIMER

The statements provided concerning the material shown are intended as a guide for material usage and are believed to be true and accurate at the time of printing. No statement made by anyone may supersede this information, except when done in writing by Mule-Hide Products Co., Inc. Since the manner of use is beyond our control, Mule-Hide does not authorize anyone to make any warranty of merchantability or fitness for any particular purpose or any other warranty, guarantee or representation, expressed or implied, concerning this material. Buyer and user accept the product under these conditions and assume the risk of any failure, any injury person or property (including that of the user), loss or liability resulting from the handling, storage or use of the product whether or not it is handled, stored or used in accordance with the directions or specifications. Mule-Hide must be notified in writing of any claims and be given the opportunity to inspect the alleged failure before repairs are made.

Product Data Sheet

PVC OUTSIDE CORNERS

PRODUCT DESCRIPTION

PVC Outside Corners are pre-molded from non-reinforced PVC (polyolefin) membrane.

BASIC USES

PVC Outside Corners are uniform in shape and size and provide water tightness at Outside corners formed by PVC coated metal and/or PVC flashing membrane. They provide a neat, finished look to building corners, curbs and parapet flashings with no cutting required.

TYPICAL PHYSICAL PROPERTIES

Typical Properties	
Color:	White, Gray & Tan
Material:	Non-reinforced molded PVC
Thickness:	.060" (1.52mm)
Packaging:	12 pieces per bag

LEED Information	
Pre-consumer Recycled Content	0%
Post-consumer Recycled Content	0%
Manufacturing Location	Bloomingdale, IL
Solar Reflectance Index (SRI)	White: 111 Gray: 43 Tan: 50

*Typical properties and characteristics are based on samples tested and are not guaranteed for all samples of this product. This data and information is intended as a guide and does not reflect the specification range for any particular property of this product.

BENEFITS

- More consistent performance compared to hand cutting
- Forms easily to flash “out of square” outside corners that are not exactly 90 degrees
- Offers labor savings compared to hand cut flashings

INSTALLATION INSTRUCTIONS

1. If membrane has been exposed to the weather, clean splice intersection area with PVC Membrane Cleaner.
2. Use a lower temperature setting on the hand heat welder than that used for welding reinforced PVC membrane.
3. Position PVC Outside Corner into the building corner and begin welding at the innermost corner point and work away from the corner.
4. Use the roller edge to crease the corner flashing into any membrane step-off to create a proper seal.
5. Using a probe, check all splices for voids and cold welds only once the PVC Outside corner has completely cooled. Make any needed repairs.

Review Mule-Hide specifications and details for additional installation information.

STORAGE

Corners should be stored in a clean, dry area and protected from extreme temperatures. PVC Outside Corners or PVC membranes that have been exposed to the weather or contaminated with dirt must be prepared with PVC Membrane Cleaner.

PROTECTION & SAFETY

Mule-Hide maintains Safety Data Sheets on all of its non-exempt products. Safety Data Sheets contain health and safety information for your development of appropriate product handling procedures to protect your employees and customers. Mule-Hide's Safety Data Sheets should be read and understood by all of your supervisory personnel and employees before using Mule-Hide products in your facilities.

ADDITIONAL INFORMATION

The information given on this PDS is subject to change without notice. Always check the Mule-Hide website at www.mulehide.com for the latest information, changes and updates or contact Mule-Hide Products Company at 800-786-1492.

DISCLAIMER

The statements provided concerning the material shown are intended as a guide for material usage and are believed to be true and accurate at the time of printing. No statement made by anyone may supersede this information, except when done in writing by Mule-Hide Products Co., Inc. Since the manner of use is beyond our control, Mule-Hide does not authorize anyone to make any warranty of merchantability or fitness for any particular purpose or any other warranty, guarantee or representation, expressed or implied, concerning this material. Buyer and user accept the product under these conditions and assume the risk of any failure, any injury person or property (including that of the user), loss or liability resulting from the handling, storage or use of the product whether or not it is handled, stored or used in accordance with the directions or specifications. Mule-Hide must be notified in writing of any claims and be given the opportunity to inspect the alleged failure before repairs are made.

Product Data Sheet

PVC UNIVERSAL CORNERS

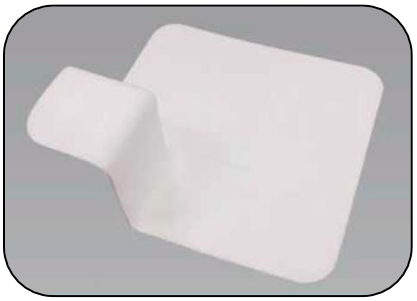

PRODUCT DESCRIPTION

PVC Universal Corners are pre-molded from non-reinforced thermoplastic poly vinyl chloride material.

BASIC USES

They are uniform in shape and size and provide water tightness at corners formed by PVC coated metal and flashing membrane. They provide a neat, finished look to building corners, curbs and parapet flashings with no cutting or stretching required.

SPECIFICATIONS

Typical Properties	
Color	White
Material	Injection-molded PVC
Thickness	.060" (1.5 mm)
Packaging	20 per carton

LEED Information	
Pre-consumer Recycled	0%
Post-consumer Recycled	0%
Manufacturing Location	Bloomingdale, IL
Solar Reflectance Index	111

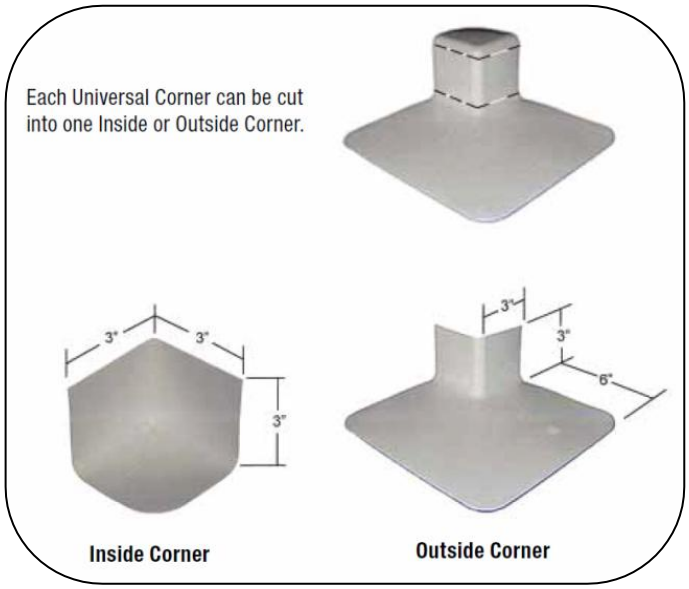

BENEFITS

- More consistent performance and appearance compared to hand cutting
- Each Universal Corner can be cut into one inside or one outside corner
- Large flange eliminates need for T-Joint Patches
- Offers labor savings compared to hand cut flashings

INSTALLATION INSTRUCTIONS

See the diagram above for cutting instructions. The cutting instructions are also molded into each part. The unreinforced PVC flashing will require a lower temperature setting on the heat welder than that used for reinforced PVC membrane. Typically, a setting of 6 on a scale of 10 is appropriate for welding Universal Corners.

Outside Corner

1. Clean surface to be welded with PVC Membrane Cleaner.
2. Place the outside corner flashing into position over the outside intersection of the corner.
3. Begin welding at the bottom point of the outside corner flashing. Weld straight up the vertical portion of the corner, working from the inside toward the outside.
4. Weld the bottom flange starting on the inside and working towards the outer edges. Use the edges of the roller to crease the corner into any membrane step-off to create a proper seal.
5. Once the heat weld has completely cooled, use a probe to check all welds for voids and cold welds. Make any needed repairs.

Inside Corner

1. Clean surface to be welded with PVC Membrane Cleaner.
2. After cut is made from the Universal Corner to produce an inside corner, flip the cut piece over. Place the inside corner flashing into the corner detail.
3. Begin welding at the innermost corner point and work up and away from the corner. Weld each side of the inside corner flashing, working from the inside toward the outside.
4. Weld the bottom flange starting on the inside and working towards the outer edges. Use the edges of the roller to crease the corner into any membrane step-off to create a proper seal.
5. Once the heat weld has completely cooled, use a probe to check all welds for voids and cold welds. Make any needed repairs.

Review Mule-Hide specifications and details for additional information.

STORAGE

Store PVC Universal Corners in a cool, shaded area and cover with light-colored, breathable, waterproof tarpaulins. PVC Universal Corners or PVC membrane that has been exposed to the weather prior to use must be prepared with PVC Membrane Cleaner prior to hot-air welding.

PROTECTION & SAFETY

Mule-Hide maintains Safety Data Sheets on all of its non-exempt products. Safety Data Sheets contain health and safety information for your development of appropriate product handling procedures to protect your employees and customers. Mule-Hide's Safety Data Sheets should be read and understood by all of your supervisory personnel and employees before using Mule-Hide products in your facilities.

ADDITIONAL INFORMATION

The information given on this PDS is subject to change without notice. Always check the Mule-Hide website at www.mulehide.com for the latest information, changes and updates or contact Mule-Hide Products Company at 800-786-1492.

DISCLAIMER

The statements provided concerning the material shown are intended as a guide for material usage and are believed to be true and accurate at the time of printing. No statement made by anyone may supersede this information, except when done in writing by Mule-Hide Products Co., Inc. Since the manner of use is beyond our control, Mule-Hide does not authorize anyone to make any warranty of merchantability or fitness for any particular purpose or any other warranty, guarantee or representation, expressed or implied, concerning this material. Buyer and user accept the product under these conditions and assume the risk of any failure, any injury person or property (including that of the user), loss or liability resulting from the handling, storage or use of the product whether or not it is handled, stored or used in accordance with the directions or specifications. Mule-Hide must be notified in writing of any claims and be given the opportunity to inspect the alleged failure before repairs are made.

Product Data Sheet

PVC PIPE SEALS

PRODUCT DESCRIPTION

PVC Pipe Seals are an injection molded, pre-formed flashing for pipes made of non-reinforced PVC material. They are designed to add ease to the installation process while offering increased watertight security and improved aesthetics.

BASIC USES

PVC Pipe Seals are designed as an economical flashing for single pipe penetrations on Mule-Hide PVC Membrane roof systems. PVC Pipe Seals can be used wherever the PVC Pipe Seals may be slipped over the top of the pipe.

TYPICAL PHYSICAL PROPERTIES

Typical Properties and Characteristic	
Sizes	¾" to 8" od (19.0 to 203.2 mm)
Packaging	8 per box
Weight (each)	0.55 lbs (0.25 kg)
Material	Injection molded PVC
Color	White, Gray & Tan
Service Temp	Max 160°F (71°C)

BENEFITS & SUPPLEMENTAL STATEMENTS

- Provides a reliable method of waterproofing round pipe penetrations
- Offers substantial labor savings when compared to field fabrication

INSTALLATION INSTRUCTIONS

1. Remove all existing lead and other flashings.
2. Temperature of pipe must not exceed 160°F (71°C)
3. Cut pipe seal to the desired diameter by cutting between two raised 'ribs' as illustrated on flange of pipe seal. (Do not cut off both raised 'ribs')
4. Pull pipe seal over pipe until base flange is in contact with the membrane. Top portion of pipe seal may be heated to facilitate installation.
5. Mark pipe around top of pipe seal.
6. Pull pipe seal upward until mark on pipe is visible.
7. For mechanically attached systems, install seam plates and fasteners at base of projection. Seam plates must fit inside flange of pipe seal.
8. Install Water Cut-off Mastic below mark on pipe.
9. Pull pipe seal back down over pipe and into position with flange contacting membrane.
10. Heat weld pipe seal to field membrane. Hand gun should be set between 6 and 7.
11. Install stainless steel clamping ring at top of pipe seal to ensure constant compression of the sealant. Do not over tighten clamp.

STORAGE & HANDLING

Store pre-molded pipe seals in a cool, shaded area and cover with a light-colored breathable, waterproof tarpaulin. Pipe seals that have been exposed to the elements must be prepared with PVC membrane cleaner prior to heat welding. Use a primer pad with the cleaner if surfaces have been exposed for an extended period of time.

PROTECTION & SAFETY

Mule-Hide maintains Safety Data Sheets on all of its non-exempt products. Safety Data Sheets contain health and safety information for your development of appropriate product handling procedures to protect your employees and customers. Mule-Hide's Safety Data Sheets should be read and understood by all of your supervisory personnel and employees before using Mule-Hide products in your facilities.

ADDITIONAL INFORMATION

The information given on this PDS is subject to change without notice. Always check the Mule-Hide website at www.mulehide.com for the latest information, changes and updates or contact Mule-Hide Products Company at 800-786-1492.

Copper Tubing (C.T.S.)											
Nominal Tube Size	¾”	1”	1 ¼”	1 ½”	2”	2 ½”	3”	4”	5”	6”	8”
Pipe O.D.	0.88	1.13	1.38	1.63	2.13	2.63	3.13	4.13	5.13	6.13	N/A
Step of Boot Used	1	1	1	1 ½	2	2	3	4	5	6	N/A
Schedule 40 / 80 Steep Pipe – PVC Standard – Polyethylene Pipe IPS											
Nominal Pipe Size	¾”	1”	1 ¼”	1 ½”	2”	2 ½”	3”	4”	5”	6”	8”
Pipe O.D.	1.05	1.32	1.66	1.90	2.38	2.88	3.50	4.50	5.56	6.63	8.63
Step of Boot Used	1	1	1 ½	1 ½	2	3	3	4	5	6	8
Cast Iron Pipe	**Pit Class A & Spun 100-250**					**Pit Class B, C & D**					
Nominal Pipe Size	2”	3”	4”	6”	8”	2”	3”	4”	6”	8”	
Pipe O.D.	2.50	3.96	4.80	6.90	9.50	N/A	3.96	5.00	7.10	9.30	
Step of Boot Used	2	4	5	6	N/A	N/A	4	5	6	N/A	
Sewer Soil Pipe-PVC Plastic SFR 34 & 41-Cast Iron Soil Pipe no hub-service weight and extra heavy											
Nominal Pipe Size	4”				6”				8”		
Pipe O.D.	4.22 to 4.62				6.28 to 6.62				8.40 to 8.75		
Step of Boot Used	4				6				8		
Conduit EMT											
Nominal Pipe Size	¾”	1”	1 ¼”	1 ½”	2”	2 ½”	3”	3 ½”	4”		
Pipe O.D.	0.922	1.16	1.51	1.74	2.19	2.88	3.50	4.00	4.50		
Step of Boot Used	1	1	1	1 ½	2	3	3	4	4		
Conduit IMC											
Nominal Pipe Size	¾”	1”	1 ¼”	1 ½”	2”	2 ½”	3”	3 ½”	4”		
Pipe O.D.	1.02	1.29	1.63	1.88	2.36	2.85	3.47	3.97	4.46		
Step of Boot Used	1	1	1 ½	1 ½	2	3	3	4	4		
Conduit Rigid											
Nominal Pipe Size	¾”	1”	1 ¼”	1 ½”	2”	2 ½”	3”	3 ½”	4”	5”	
Pipe O.D.	1.05	1.32	1.66	1.90	2.37	2.87	3.50	4.00	4.50	5.56	
Step of Boot Used	1	1	1 ½	1 ½	2	3	3	4	4	5	

DISCLAIMER

The statements provided concerning the material shown are intended as a guide for material usage and are believed to be true and accurate at the time of printing. No statement made by anyone may supersede this information, except when done in writing by Mule-Hide Products Co., Inc. Since the manner of use is beyond our control, Mule-Hide does not authorize anyone to make any warranty of merchantability or fitness for any particular purpose or any other warranty, guarantee or representation, expressed or implied, concerning this material. Buyer and user accept the product under these conditions and assume the risk of any failure, any injury person or property (including that of the user), loss or liability resulting from the handling, storage or use of the product whether or not it is handled, stored or used in accordance with the directions or specifications. Mule-Hide must be notified in writing of any claims and be given the opportunity to inspect the alleged failure before repairs are made.

Product Data Sheet

PVC SPLIT PIPE SEALS

PRODUCT DESCRIPTION

PVC Split Pipe Seals are fabricated flashings made of 60-mil reinforced PVC membrane for pipes 1-inch (25.4 mm) to 6-inches (152.4 mm) in diameter. Overall height is 11". They are designed to add ease to the installation process while offering increased watertight security and improved aesthetics

BASIC USES

The PVC Split Pipe Seals contains a split (cut) and overlap tab that allows the pipe-boot to be opened and wrapped around a round pipe with an obstruction. Such obstructions prevent the use of a standard pre-molded pipe boot.

TYPICAL PHYSICAL PROPERTIES

Typical Properties*	
Size	1" to 6" OD Pipe (25.4 to 152.4)
Packaging	8 per box
Weight (each)	0.55 lbs (0.25 kg)
Material	Reinforced 60-mil PVC
Colors	White, Gray and Tan

LEED Information	
Pre-consumer Recycled	0%
Post-consumer Recycled	0%
Manufacturing Location	Bloomingdale, IL
Solar Reflectance Index (SRI)	White: 111 Gray: 43 Tan: 50

*Typical properties and characteristics are based on samples tested and are not guaranteed for all samples of this product. This data and information is intended as a guide and does not reflect the specification range for any particular property of this product.

BENEFITS

- Offers substantial labor savings when compared to field fabricated flashings
- Provides a uniform, consistent appearance
- Simplifies the field installers job when flashing a pipe next to an obstruction
- Provides a reliable method of waterproofing round pipe penetrations

INSTALLATION INSTRUCTIONS

1. Clean the penetration to eliminate any rust or scale and wipe with PVC Membrane Cleaner.
2. Confirm the outside diameter of the pipe. The nominal diameter of the Split Pipe Seal indicates the maximum size the part will effectively fit. Each PVC Split Pipe Seal can accommodate a pipe that is 1-inch smaller in outside diameter. For example, a 2-inch PVC Split Pipe Seal can be utilized to flash pipes ranging from 1-1/6" in diameter up to 2" in diameter.
3. Open the PVC Split Pipe Seal and pulling apart the tack welds located on the vertical leg of the flashing.
4. Wrap the PVC Split Pipe Seal around the pipe until the vertical leg is tight against the outside diameter of the pipe penetration.
5. Mark the pipe around the top of the PVC Split Pipe Seal.
6. Remove the PVC Split Pipe Seal from around the pipe.
7. Install Water Single-Ply Sealant below the mark indicating the top of the installed PVC Split Pipe Seal.
8. Wrap the pvc Split Pipe Seal back around the penetration until the vertical leg is tight against the outside diameter of the pipe penetration.
9. Tack weld the back edge of the pvc Split Pipe Seal vertical leg ensuring that good contact is maintained between the PVC Split Pipe Seal and the pipe. This process will hold the PVC Split Pipe Seal in place.

INSTALLATION INSTRUCTIONS (Continued)

10. Heat-weld the entire width of the vertical overlap. Hand roll against the outer surface of the pipe to create the pressure necessary to achieve an acceptable weld.
11. Heat-weld the base flange to the deck membrane and complete the horizontal overlap weld.
12. Once the flashing has completely cooled, check all splices for voids and cold welds. Make any needed repairs.
13. Install a stainless steel universal clamping ring to provide constant compression of the sealant.
14. Apply Cut-Edge Sealant to all edges of the PVC Split Pipe Seal that are located on the horizontal plane. Do not apply the sealant to vertical surfaces.

    Refer to Mule-Hide Specifications and detail drawings for additional information.

PRECAUTIONS

1. All lead and other flashings must be removed prior to installation.
2. Temperature of pipe penetration must not exceed 160ºF (71ºC).
3. For mechanically attached systems, install a minimum of four fastening plates equally spaced around base of pipe projections. Plates must be completely covered by the flange of the PVC Split Pipe Boot and allow for a minimum 1 ½" wide heat weld. If plates cannot be installed to allow a minimum 1 ½" wide heat weld, install the plated outside of the Split Pipe Seal flange and cover with a target patch of PVC field membrane with heat welded seams.

STORAGE & HANDLING

Store PVC Split Pipe Seals in a cool, shaded area and cover with light-colored, breathable, waterproof tarpaulins. Mule-Hide PVC Split Pipe Seals or PVC membrane that have been exposed to the weather prior to use must be prepared with PVC Membrane Cleaner prior to hot air welding. Use a primer pad with the cleaner if surfaces have been exposed for an extended period of time.

PROTECTION & SAFETY

Mule-Hide maintains Safety Data Sheets on all of its non-exempt products. Safety Data Sheets contain health and safety information for your development of appropriate product handling procedures to protect your employees and customers. Mule-Hide's Safety Data Sheets should be read and understood by all of your supervisory personnel and employees before using Mule-Hide products in your facilities.

ADDITIONAL INFORMATION

The information given on this PDS is subject to change without notice. Always check the Mule-Hide website at www.mulehide.com for the latest information, changes and updates or contact Mule-Hide Products Company at 800-786-1492.

DISCLAIMER

The statements provided concerning the material shown are intended as a guide for material usage and are believed to be true and accurate at the time of printing. No statement made by anyone may supersede this information, except when done in writing by Mule-Hide Products Co., Inc. Since the manner of use is beyond our control, Mule-Hide does not authorize anyone to make any warranty of merchantability or fitness for any particular purpose or any other warranty, guarantee or representation, expressed or implied, concerning this material. Buyer and user accept the product under these conditions and assume the risk of any failure, any injury person or property (including that of the user), loss or liability resulting from the handling, storage or use of the product whether or not it is handled, stored or used in accordance with the directions or specifications. Mule-Hide must be notified in writing of any claims and be given the opportunity to inspect the alleged failure before repairs are made.

Poly ISO 2

Roof Insulation

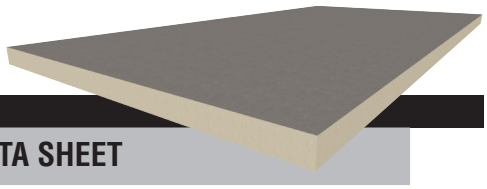

PRODUCT DATA SHEET

DESCRIPTION

MuleHide Poly ISO 2 (flat) and Poly ISO 2 (Tapered) insulations consist of a closed-cell polyisocyanurate foam core laminated to heavy, (non-asphaltic) glass fiber reinforced felt facers. Poly ISO 2 insulations are compatible with all MuleHide membranes and accessories and are available in 20 and 25 psi densities.

BASIC USES

MuleHide Poly ISO 2 insulation boards may be used for ballasted, mechanically attached and fully adhered single-ply roofing systems. Poly ISO 2 insulation boards may be installed over approved decks and substrates on new construction, tear-offs, and recover (retrofit) projects. Rated for use in UL Class A and FM Class 1 assemblies.

BENEFITS & SUPPLEMENTAL STATEMENTS

- Approved for direct application to steel decks
- MuleHide Poly ISO 2™ is manufactured using CFC-, HCFC-, and HFC-free foam blowing technology with zero ozone depletion potential (ODP) and virtually no (negligible) global warming potential (GWP)
- Available as 4' x 4' or 4' x 8' panels in Grade 2 (20 psi) or Grade 3 (25 psi)
- Thicknesses range from 1" to 4.5"
- Contains between 52.9% and 27.6% recycled materials by weight

PACKAGING

Factory-applied packaging is only intended for protection during transit. When stored outside or at the job site, the insulation must be stored at least 4" above ground level and completely covered with a weatherproof covering such as a tarpaulin. **Warning - Do Not Leave Exposed:** This product will burn if exposed to an ignition source of sufficient heat and intensity, or an open flame.

CODE APPROVALS/COMPLIANCE

Poly ISO 2 complies with the requirements of the following specifications, test and code requirements when properly installed.

- ASTM C 1289, Type II, Class 1, Grade 2 (20 psi) or Grade 3 (25 psi)
- CAN/ULC-S704 Type 2, Class 3 or Type 3, Class 3 CCMC No. 12464-L
- FM Standard 4450/4470 Approval, Class 1
- UL Standard 1256 Classification
- UL Standard 790 Classification
- UL Standard 263 Fire Resistance Classification
- UL Standard 1897 Uplift Resistance
- IBC Chapter 26 and NBC Sections on Foam Insulation

(continued page 2)

TYPICAL PHYSICAL PROPERTIES (FLAT & TAPERED)

Property	Test Method	Typical Result
Dimensional Stability	ASTM D2126	<2% Linear Change
Compressive Strength	ASTM D1621 (10% deformation)	20 PSI (Grade 2) 25 PSI (Grade 3)
Water Absorption	ASTM C209, ASTM D2842	< 1.5%, <3.5%
Water Vapor Transmission	ASTM E96	< 1.5 Perm
Product Density	ASTM D1622	Nominal 2 lbs./cubic ft.
Flame Spread (Foam Core)	ASTM E84	40 to 60*
Smoke Development	ASTM E84	50 to 170*
Service Temperature	--	-100°F to 250°F Max**
Tensile Strength	ASTM D1623	>730 psf (35 kPa)

*The numerical ratings are determined by ASTM Test Method E-84 are not intended to reflect hazards presented by this or any other material under actual fire conditions. A flame spread index of 75 or less and smoke development of 450 or less meet code requirements regarding flame spread and smoke development for foam plastic roof insulation. However, the codes exempt foam plastic insulation when used in roof deck constructions that comply as an assembly with FM 4450 or UL 1256 (see IBC, NBC, UBC and SBS Sections on Foam Plastic Insulation (Chapter 26). Smoke development does not apply to roofing.

**ASTM C1289 Standard Specification for Faced Rigid Cellular Polyisocyanurate Thermal Insulation. The physical properties above are presented as typical average values as determined by accepted ASTM test methods and are subject normal manufacturing variation.

POLY ISO 2 (FLAT)

Nominal Thickness*	(mm)	LTTR R-Value	RSI	Flute Spanability
1.0	25.4	5.7	1.00	2-5/8
1.5	38.1	8.6	1.51	4-3/8
2.0	50.8	11.4	2.01	4-3/8
2.5	63.5	14.4	2.53	4-3/8
2.6	66	15	2.63	4-3/8
3.0	76.2	17.4	3.06	4-3/8
3.5	88.9	20.5	3.61	4-3/8
4.0	101.6	23.6	4.16	4-3/8

Long Term Thermal Resistance Values are based on ASTM C1289 (revised Jan-2014) and CAN/ULC S770 which provides for a 15-year time-weighted average.

*Other thicknesses available upon special request.

POLY ISO 2 (TAPERED)

Nominal Thickness*	(mm)	LTTR R-Value	RSI	Slope Per Ft.
0.5-1.0	12-25	4.3	0.76	1/8"
1.0-1.5	25-38	7.1	1.25	1/8"
1.5-2.0	38-50	10.0	1.76	1/8"
2.0-2.5	50-63	12.9	2.27	1/8"
0.5-1.5	12-38	5.7	1.00	1/4"
1.5-2.5	38-63	11.4	2.01	1/4"
0.5-2.5	12-63	8.6	1.51	1/2"

Long Term Thermal Resistance Values are based on ASTM C1289 (revised Jan-2014) and CAN/ULC S770 which provides for a 15-year time-weighted average.

*Other thicknesses MAY be available upon special request.

Poly ISO 2

Roof Insulation

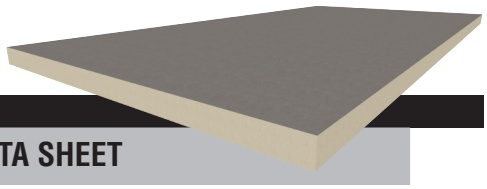

PRODUCT DATA SHEET

PROFILES

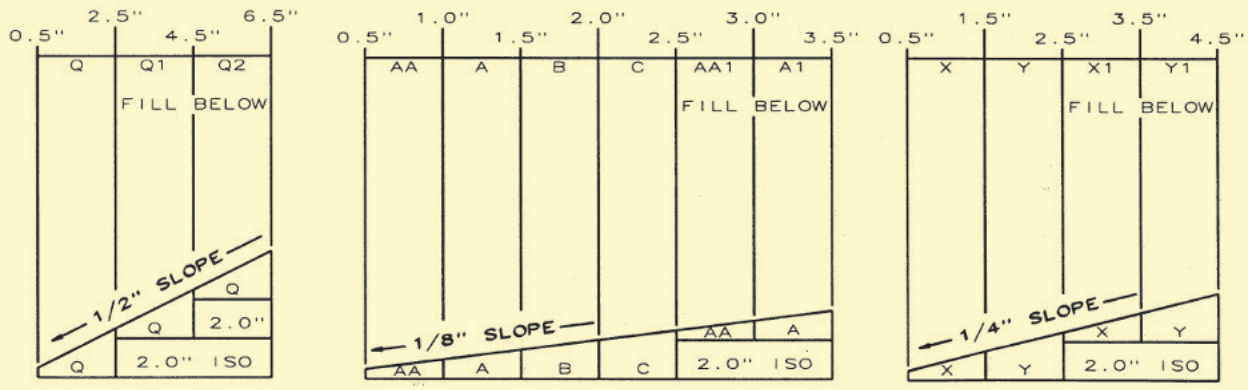

- California State Insulation Quality Standards and Title 25 Foam Flammability Criteria (license #T1231)
- Has achieved GREENGUARD GOLD Certification UL 2818

MuleHide Poly ISO 2 is manufactured using CFC-, HCFC-, and HFC-free foam blowing technology with zero ozone depletion potential (ODP) and virtually no (negligible) global warming potential (GWP).

INSTALLATION INSTRUCTIONS

Ballasted Single-Ply Membrane Systems - MuleHide Poly ISO 2 does not require attachment to the deck in this system. All boards must be tightly fitted together to prevent movement, separation or damage during the installation of the membrane system. All gaps greater than 1/4" must be filled. After the membrane is installed, sufficient amounts of ballast must be applied to prevent membrane and insulation movement. Refer to the MuleHide Manual and FM Loss Prevention Data Sheet 1-29 for information regarding ballasting guidelines.

Mechanically Attached Single-Ply Membrane Systems - MuleHide Poly ISO 2 should be attached with MuleHide fasteners and insulation plates (or FM Approved fasteners) using a minimum of 4 fasteners per 4'x 4' board (1 fastener per 4 square feet) and a minimum of 6 fasteners per 4'x 8' board (1 fastener per 5.33 square feet). Refer to the MuleHide Manual for proper fastener placement.

Fully Adhered Single-Ply Membrane Systems - MuleHide Poly ISO 2 should be installed with the perforated side down. Insulation attachment will vary depending upon insulation thickness and job requirements. If the top layer is less than 2" thick, install a minimum of 8 fasteners per 4'x 4' board (1 fastener per 2 square feet) and a minimum of 16 fasteners per 4'x 8' board (1 fastener per 2 square feet). If the top layer is 2" thick or thicker, install 4 fasteners per 4' x 4' or 8 fasteners per 4' x 8' insulation board. Refer to the MuleHide Manual for proper fastener density and placement. Additional fastening may be required for certain job conditions. In some instances hot, steep asphalt or insulation adhesive may be used to attach the MuleHide Poly ISO 2 to approved concrete decks. Only 4'x 4' boards may be used. Contact MuleHide's Technical Department for specific requirements and procedures.

PROTECTION & SAFETY

MuleHide maintains safety data sheets on all of its non-exempt products. Safety data sheets contain health and safety information for your development of appropriate product handling procedures to protect your employees and customers. MuleHide's safety data sheets should be read and understood by all of your supervisory personnel and employees before using MuleHide products in your facilities.

ADDITIONAL INFORMATION

On projects where a MuleHide standard or premium warranty is requested, an authorized MuleHide representative shall inspect all completed work.

The information given on this PDS is subject to change without notice. Always check the MuleHide website at www.mulehide.com for the latest information, changes and updates or contact MuleHide at 800-786-1492.

DISCLAIMER

The statements provided concerning the material shown are intended as a guide for material usage and are believed to be true and accurate at the time of printing. No statement made by anyone may supersede this information, except when done in writing by Mule-Hide Products Co., Inc. ("MuleHide"). Since the manner of use is beyond our control, MuleHide does not authorize anyone to make any warranty of merchantability or fitness for any particular purpose or any other warranty, guarantee or representation, expressed or implied, concerning this material. This product may be eligible for a MuleHide warranty, please check the MuleHide website at www.mulehide.com or contact MuleHide directly at 800-786-1492 for details. Buyer and user accept the product under these conditions and assume the risk of any failure, any injury to person or property (including that of the user), loss or liability resulting from the handling, storage or use of the product whether or not it is handled, stored or used in accordance with the directions or specifications. MuleHide must be notified in writing of any claims and be given the opportunity to inspect the alleged failure before repairs are made.

Poly ISO 1

Roof Insulation

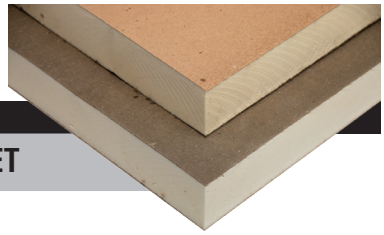

PRODUCT DATA SHEET

DESCRIPTION

MuleHide Poly ISO 1 polyisocyanurate insulation (flat or tapered) is a closed-cell polyisocyanurate foam core laminated to (non-asphaltic) glass fiber reinforced felt facers. Featuring glass facer with a light and dark side, allowing the installer to choose which side to install up to control flash-off times in fully adhered applications. MuleHide Poly ISO 1 is compatible with all MuleHide membranes and accessories. Available in 20 psi and 25 psi.

BASIC USES

MuleHide Poly ISO 1 insulation board may be used for ballasted, mechanically attached and fully adhered single-ply roofing systems. Poly ISO 1 insulation board may be installed over approved decks and substrates on new construction, tear-offs, and recover (retrofit) projects. Poly ISO 1 insulation board may be used in UL Class A and FM Class 1 assemblies.

BENEFITS AND SUPPLEMENTAL STATEMENTS

- Approved for direct application to steel decks
- MuleHide Poly ISO 1™ is manufactured with NexGen Chemistry: Contains no CFCs, HCFCs, is Zero ODP, EPA Compliant and has virtually no GWP
- Available as 4' x 4' or 4' x 8' panels in Grade 2 (20 psi) or Grade 3 (25 psi)
- Available in 4' x 12' panels in Grade 2 (20 psi) in the following thickness: 1.5", 1.75", 2.0", 2.2", 2.5", 2.6", 3.0", 3.3" and 3.5"

PACKAGING

Factory-applied packaging is only intended for protection during transit. When stored outside or at the job site, the insulation must be stored at least 4" above ground level and completely covered with a weatherproof covering such as a tarpaulin. **Warning - Do Not Leave Exposed:** This product will burn if exposed to an ignition source of sufficient heat and intensity, or an open flame.

CODE APPROVALS/COMPLIANCE

Poly ISO 1™ complies with the requirements of the following specifications, test and code requirements when properly installed

- Federal Specification HH-I-1972/GEN and HH-I-1972/2, Class 1
- ASTM C 1289 Type II, Class 1, Grade 2 (20 psi), Grade 3 (25 psi)
- FM Standard 4450/4470 Approval, Class 1
- UL Standard 1256 Classification
- UL Standard 790 Classification
- UL Standard 263 Fire Resistance Classification

TYPICAL PHYSICAL PROPERTIES

Property	Test Method	Typical Result
Dimensional Stability	ASTM D2126	2% Linear Change (7 days)
Compressive Strength	ASTM D1621	20 PSI (Grade 2) 25 PSI (Grade 3)
Water Absorption	ASTM D209	< 1% By Volume
Water Vapor Transmission	ASTM E96	< One (1) Perm
Service Temperature	--	-100°F to 250°F Max
Flame Spread (Foam Core)	ASTM E84	< 75*
Smoke Development	ASTM E84	< 450*

The physical properties above are presented as typical average values as determined by accepted ASTM test methods and are subject to change. All information can be confirmed by contacting MuleHide.

*The numerical ratings are determined by ASTM Test Method E-84 are not intended to reflect hazards presented by this or any other material under actual fire conditions. A flame spread index of 75 or less and smoke development of 450 or less meet code requirements regarding flame spread and smoke development for foam plastic roof insulation. However, the codes exempt foam plastic insulation when used in roof deck constructions that comply as an assembly with FM 4450 or UL 1256 (see IBC, NBC, UBC and SBS Sections on Foam Plastic Insulation (Chapter 26). Smoke development does not apply to roofing.

TYPICAL PHYSICAL PROPERTIES (CONTINUED)

Nominal Thickness*	(mm)	LTTR R-Value	C-Value	Metal Deck Max. Flute
0.5	13	2.8	.350	2-5/8
1.0	25	5.7	.175	2-5/8
1.5†	38	8.6	.116	4-3/8
1.75†	44	10.0	.100	4-3/8
1.8	46	10.3	.097	4-3/8
2.0†	51	11.4	.088	4-3/8
2.2†	56	12.6	.080	4-3/8
2.5†	64	14.4	.069	4-3/8
2.6†	66	15.0	.067	4-3/8
3.0†	76	17.4	.057	4-3/8
3.3†	84	19.2	.053	4-3/8
3.5†	89	20.5	.049	4-3/8
3.8	97	22.3	.045	4-3/8
4.0	102	23.6	.042	4-3/8
4.3	109	25.5	.039	4-3/8
4.5	114	26.8	.037	4-3/8

Long Term Thermal Resistance Values are based on ASTM C1289 (revised Jan-2014) and CAN/ULC S770 which provides for a 15-year time-weighted average.
*Other thicknesses available upon special request.
†4'x12' panel

LEED INFORMATION

Pre-consumer Recycled Content	5%
Post-consumer Recycled Content	0%
Manufacturing Location	Puyallup, WA; Fanklin Park, IL; Tooele, UT; Smithfield, PA; Montgomery, NY; Terrell, TX; Lake City, FL
Available Sizes	2.0" and 2.6"

Poly ISO 1

Roof Insulation

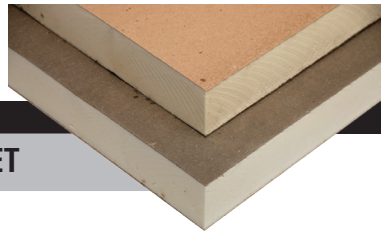

PRODUCT DATA SHEET

PROFILES

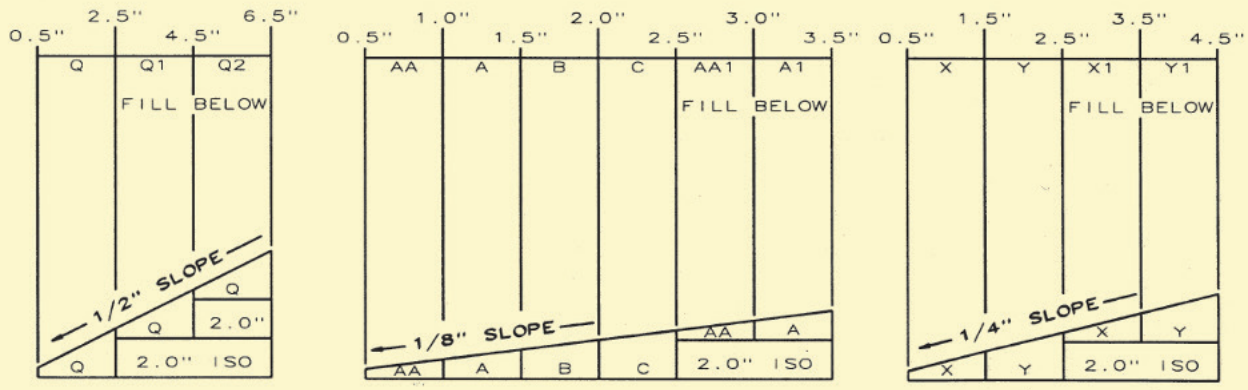

INSTALLATION INSTRUCTIONS

Ballasted Single-Ply Membrane Systems - MuleHide Poly ISO 1 does not require attachment to the deck in this system. All boards must be tightly fitted together to prevent movement, separation or damage during the installation of the membrane system. All gaps greater than 1/4" must be filled. After the membrane is installed, sufficient amounts of ballast must be applied to prevent membrane and insulation movement. Refer to the MuleHide Manual and FM Loss Prevention Data Sheet 1-29 for information regarding ballasting guidelines.

Mechanically Attached Single-Ply Membrane Systems - MuleHide Poly ISO 1 should be attached with MuleHide fasteners and insulation plates (or FM Approved fasteners) using a minimum of 4 fasteners per 4'x 4' board (1 fastener per 4 square feet) and a minimum of 6 fasteners per 4'x 8' board (1 fastener per 5.33 square feet). Refer to the MuleHide Manual for proper fastener placement. When using 4'x12' Poly-Iso 1 boards, 6 fasteners and plates per board may be acceptable on MuleHide system warranties up to 20 years (minimum 1.5" board thickness). Not acceptable on recover/no tear-off projects.

Fully Adhered Single-Ply Membrane Systems - MuleHide Poly ISO 1 should be installed with the perforated side down. Insulation attachment will vary depending upon insulation thickness and job requirements. If the top layer is less than 2" thick, install a minimum of 8 fasteners per 4'x 4' board (1 fastener per 2 square feet) and a minimum of 16 fasteners per 4'x 8' board (1 fastener per 2 square feet). If the top layer is 2" thick or thicker, install 4 fasteners per 4' x 4' or 8 fasteners per 4' x 8' insulation board. Refer to the MuleHide Manual for proper fastener density and placement. Additional fastening may be required for certain job conditions. In some instances hot steep asphalt or insulation adhesive may be used to attach the MuleHide Poly ISO 1 to approved concrete decks. Only 4'x 4' boards may be used. Contact MuleHide's Technical Department for specific requirements and procedures. 4'x12' Polyiso 1 boards shall be fastened at the same or greater rate per square foot of board.

PROTECTION & SAFETY

MuleHide maintains safety data sheets on all of its non-exempt products. Safety data sheets contain health and safety information for your development of appropriate product handling procedures to protect your employees and customers. MuleHide's safety data sheets should be read and understood by all of your supervisory personnel and employees before using MuleHide products in your facilities.

ADDITIONAL INFORMATION

On projects where a MuleHide standard or premium warranty is requested, an authorized MuleHide representative shall inspect all completed work.

The information given on this PDS is subject to change without notice. Always check the MuleHide website at www.mulehide.com for the latest information, changes and updates or contact MuleHide at 800-786-1492.

DISCLAIMER

The statements provided concerning the material shown are intended as a guide for material usage and are believed to be true and accurate at the time of printing. No statement made by anyone may supersede this information, except when done in writing by Mule-Hide Products Co., Inc. ("MuleHide"). Since the manner of use is beyond our control, MuleHide does not authorize anyone to make any warranty of merchantability or fitness for any particular purpose or any other warranty, guarantee or representation, expressed or implied, concerning this material. This product may be eligible for a MuleHide warranty, please check the MuleHide website at www.mulehide.com or contact MuleHide directly at 800-786-1492 for details. Buyer and user accept the product under these conditions and assume the risk of any failure, any injury to person or property (including that of the user), loss or liability resulting from the handling, storage or use of the product whether or not it is handled, stored or used in accordance with the directions or specifications. MuleHide must be notified in writing of any claims and be given the opportunity to inspect the alleged failure before repairs are made.

Product Data Sheet

MULE-HIDE 3” INSULATION PLATE

PRODUCT DESCRIPTION

Mule-Hide‘s 3” Insulation Plates are round Galvalume coated metal plates with reinforcing ribs for superior wind uplift resistance

BASIC USES

Mule-Hide's 3” Insulation Plates are designed specifically for the mechanical attachment of Mule-Hide’s Poly ISO 1 and Poly ISO 2 insulation and other FM Approved insulation / cover boards.

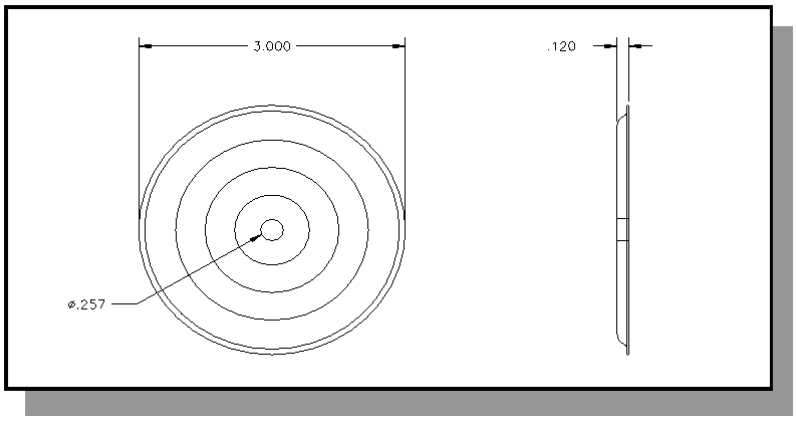

SPECIFICATIONS

Material:	26 ga. Galvalume coated metal
Coating:	Galvalume AZ-50
Corrosion:	Meets FM 4470, ASTM D 6294 & DIN 50018
LEED Eligible Recycle Content	49%
Manufacturing Location	Cleveland, OH

CODE APPROVALS/COMPLIANCE

Mule-Hide HDP Fasteners comply with the requirements of the following specifications, test and code requirements when properly installed.

* FM Standard 4450/4470 Approval * Metro-Dade Approved *Florida Product Approval

PACKAGING

Packaged in cartons of 1,000, approximate weight is 40# per box.

INSTALLATION INSTRUCTIONS

Install Mule-Hide 3” Insulation Plates with head indentation facing upward.
Secure 3” insulation plate with Mule-Hide Drill Point, HDP or EHD fasteners in to substrate.
Use eye protection when installing fasteners.
PROTECTION & SAFETY

MULE-HIDE 3” INSULATION PLATE

Mule-Hide maintains Safety Data Sheets on all of its non-exempt products. Safety Data Sheets contain health and safety information for your development of appropriate product handling procedures to protect your employees and customers. Mule-Hide's Safety Data Sheets should be read and understood by all of your supervisory personnel and employees before using Mule-Hide products in your facilities.

ADDITIONAL INFORMATION

The information given on this PDS is subject to change without notice. Always check the Mule-Hide website at www.mulehide.com for the latest information, changes and updates or contact Mule-Hide Products Company at 800-786-1492.

DISCLAIMER

The statements provided concerning the material shown are intended as a guide for material usage and are believed to be true and accurate at the time of printing. No statement made by anyone may supersede this information, except when done in writing by Mule-Hide Products Co., Inc. Since the manner of use is beyond our control, Mule-Hide does not authorize anyone to make any warranty of merchantability or fitness for any particular purpose or any other warranty, guarantee or representation, expressed or implied, concerning this material. This product may be eligible for a Mule-Hide warranty, please check the Mule-Hide website at www.mulehide.com or contact Mule-Hide directly at 800-786-1492 for details. Buyer and user accept the product under these conditions and assume the risk of any failure, any injury person or property (including that of the user), loss or liability resulting from the handling, storage or use of the product whether or not it is handled, stored or used in accordance with the directions or specifications. Mule-Hide must be notified in writing of any claims and be given the opportunity to inspect the alleged failure before repairs are made.

Product Data Sheet

MULE-HIDE 2.4” SEAM PLATE

PRODUCT DESCRIPTION

Rev. May 2020

Mule-Hide’s 2.4” Seam Plates are round Galvalume coated metal plates with (14) barbed anchors and reinforcing ribs for superior wind uplift resistance

BASIC USES

Mule-Hide's 2.4” Seam Plates are designed for the mechanical attachment of the Mule-Hide Reinforced EPDM, PVC and TPO membranes. The 2.4” Seam Plates are attached with Mule-Hide HDP Fasteners or EHD Fasteners. In addition to securing mechanically attached reinforced membranes, our 2.4” Seam Plates can be used with our reinforced 6” wide RMS, or our 6” wide and 10” wide RUSS™ Strips.

SPECIFICATIONS

Material:	20 ga. Galvalume coated metal
Coating:	Galvalume AZ-55 meeting ASTM A 792 Grade 50A
Corrosion:	Meets requirements of FM 4470, ASTM D6294 and DIN 50018
LEED Eligible Recycle Content	49%
Manufacturing Location	Cleveland, OH

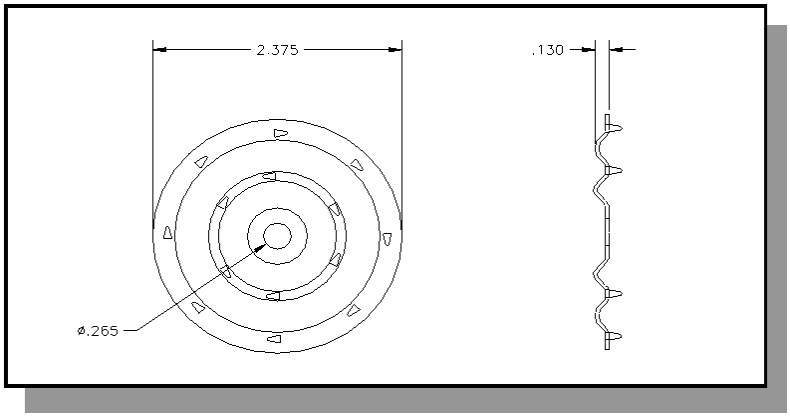

CODE APPROVALS/COMPLIANCE

Mule-Hide HDP Fasteners comply with the requirements of the following specifications, test and code requirements when properly installed.

* FM Standard 4450/4470 Approval * Metro-Dade Approved *Florida Product Approval

PACKAGING

Packaged in buckets of 1,000, approximate weight is 52# per box.

INSTALLATION INSTRUCTIONS

Install Mule-Hide 2.4” Seam Plates with barbs facing toward membrane (see appropriate detail drawing).
Secure 2.4” Seam Plate with Mule-Hide HDP or EHD fasteners in to substrate.
Use eye protection when installing fasteners.

PROTECTION & SAFETY

Mule-Hide maintains Safety Data Sheets on all of its non-exempt products. Safety Data Sheets contain health and safety information for your development of appropriate product handling procedures to protect your employees and customers. Mule-Hide's Safety Data Sheets should be read and understood by all of your supervisory personnel and employees before using Mule-Hide products in your facilities.

ADDITIONAL INFORMATION

The information given on this PDS is subject to change without notice. Always check the Mule-Hide website at www.mulehide.com for the latest information, changes and updates or contact Mule-Hide Products Company at 800-786-1492.

DISCLAIMER

The statements provided concerning the material shown are intended as a guide for material usage and are believed to be true and accurate at the time of printing. No statement made by anyone may supersede this information, except when done in writing by Mule-Hide Products Co., Inc. Since the manner of use is beyond our control, Mule-Hide does not authorize anyone to make any warranty of merchantability or fitness for any particular purpose or any other warranty, guarantee or representation, expressed or implied, concerning this material. This product may be eligible for a Mule-Hide warranty, please check the Mule-Hide website at www.mulehide.com or contact Mule-Hide directly at 800-786-1492 for details. Buyer and user accept the product under these conditions and assume the risk of any failure, any injury person or property (including that of the user), loss or liability resulting from the handling, storage or use of the product whether or not it is handled, stored or used in accordance with the directions or specifications. Mule-Hide must be notified in writing of any claims and be given the opportunity to inspect the alleged failure before repairs are made.

Product Data Sheet

DensDeck® Prime Roof Board

PRODUCT DESCRIPTION

Revision Date: February 2021

DensDeck Prime Roof Board's patented design features a gypsum core with embedded glass mat facers on the top and bottom of the board. DensDeck Prime can be used in a variety of commercial roof systems and provides an excellent thermal barrier as well as exceptional fire, moisture, and wind uplift resistance properties.

DensDeck Prime is typically used as a cover board over insulation in fully adhered EPDM, TPO, and PVC applications. It is compatible with solvent-based bonding adhesives. For applications in which Helix Max is used to attach insulation and a vapor barrier is specified, DensDeck Prime can be used as a base layer for Mule-Hide's F5 Air and Vapor Barrier (in conjunction with Aeroweb). DensDeck Prime is also compatible with hot asphalt and can be used as a membrane underlayment in hot mopped roofing systems or as a parapet wall substrate in all systems.

TYPICAL PHYSICAL PROPERTIES

Properties	1/4" (6.4 mm)	1/2" (12.7 mm)	5/8" (15.9 mm)
Thickness, nominal	1/4" (6.4 mm) ± 1/16" (1.6 mm)	1/2" (12.7 mm) ± 1/32" (0.8 mm)	5/8" (15.9 mm) ± 1/32" (0.8 mm)
Width, Standard	4' (1219 mm) ± 1/8 (3 mm)	4' (1219 mm) ± 1/8" (3 mm)	4' (1219 mm) ± 1/8" (3 mm)
Length, Standard	4' (1219 mm) 8' (2438 mm) ± 1/4" (6.4 mm)	4' (1219 mm) 8' (2438 mm) ± 1/4" (6.4 mm)	4' (1219 mm) 8' (2438 mm) ± 1/4" (6.4 mm)
Weight, nominal, lbs./sq. ft. (Kg/m^2)[7]	1.2 (5.9)	2.0 (9.8)	2.5 (12.2)
Surfacing	Fiberglass Mat with non-asphaltic coating	Fiberglass Mat with non-asphaltic coating	Fiberglass Mat with non-asphaltic coating
Flexural Strength[1], parallel, lbf. Min. (N)	≥40 (178)	≥80 (356)	≥100 (444)
Flute Spanability[2]	2-5/8" (67 mm)	5" (127mm)	8" (203mm)
Permeance[3], Perms (ng/Pa• S• m^2)	>30 (1710)	>23 (1300)	>17 (970)
R Value[4], ft^2• °F• hr/BTU (m^2 K/W)	0.28	0.56	0.67
Linear Variation with Change in Temp., in/in °F (mm/mm/°C)	8.5×10^{-6} (15.3×10^{-6})	8.5×10^{-6} (15.3×10^{-6})	8.5×10^{-6} (15.3×10^{-6})
Linear Variation with Change in Moisture	6.25×10^{-6}	6.25×10^{-6}	6.25×10^{-6}
Water Absorption[5], %	5	5	5
Compressive Strength[6], psi nominal	900	900	900
Surface Water Absorption, rams, nominal[1]	1.0	1.0	1.0
Flame Spread, Smoke Developed (ASTM E84)	0/0	0/0	0/0
Bending Radius	4' (1219 mm)	6' (1829 mm)	8' (2438 mm)

[1] Tested in accordance with ASTM C473 method B.
[2] Tested in accordance with ASTM E661.
[3] Tested in accordance with ASTM E96 (dry cup method)
[4] Tested in accordance with ASTM C518 (heat flow meter).
[5] Tested in accordance with ASTM C1177.
[6] Tested in accordance with ASTM C473.
[7] Represents approximate weight for design and shipping purposes. Actual weight may vary based on manufacturing Location and other factors.

BENEFITS AND SUPPLEMENTAL STATEMENTS

- UL code ratings available for (class A, B, C) unlimited slopes and wood decks
- FM Approved
- Improves resistance to foot traffic and hail damage
- Excellent wind uplift ratings
- Resistant to deterioration, warping, and jobsite damage
- ⅝" DensDeck Prime can replace any generic Type "X" gypsum board in any roof assembly in the UL Fire Resistance Directory under the prefix "P"

PACKAGING

Factory applied packaging is only intended for protection during transit.

1/4" 4'x4' Panels	60 pieces	1152 lbs
1/4" 4'x8' Panels	42 pieces	1613 lbs
1/2" 4'x4' Panels	50 pieces	1600 lbs
1/2" 4'x8' Panels	30 pieces	1920 lbs
5/8" 4'x4' Panels	40 pieces	1600 lbs
5/8" 4'x8' Panels	30 pieces	2400 lbs

STORAGE

When stored outside or at the job site, the roof board must be stored at least 4" above ground level and completely covered with a weatherproof covering such as a tarpaulin. **Warning - Do Not Leave Exposed:** Product must be kept dry at all times. Install only as much roof board as can be covered the same day by the roofing system.

CODE APPROVALS/COMPLIANCE

- Manufactured to conform to ASTM C-1177
- Tested in accordance with ASTM E-84 or CAN/ULC-S102
- Non-combustible when tested in accordance with ASTM E-136
- UL code approval for current class A, B, C approvals UL Class A

INSTALLATION INSTRUCTIONS

DensDeck Prime may be secured with Helix Max Adhesive, fastened in accordance with an approved fastening pattern, or mopped with Type III or IV asphalt.

Maximum asphalt application temperatures of 425°F (218°C) to 450°F (232°C) are recommended. Application temperatures above these recommended temperatures may adversely affect roof system performance.

Edge joints should be located on and parallel to deck ribs. End joints of adjacent lengths should be staggered.

1. This material shall be installed with ends and edges butted tightly.
2. When installed over combustible wood decks or insulations, all joints should be staggered.
3. In accordance with approved shop drawings, FM Approved fasteners shall be installed with plates through the roof board, flush with the surface.

Review Mule-Hide specifications and details for complete installation information.

PRECAUTIONS

- When applying solvent-based adhesives or primers, allow sufficient time for the solvents to flash off.
- ¼" DensDeck is not recommended for vertical parapet applications or for asphalt attachment.
- In ballasted roofing systems, DensDeck is not an acceptable membrane underlayment.

LEED INFORMATION

Manufacturing Location[1]	Total Recycled Content[2]	Pre-Consumer Recycled Content[2]	Post-Consumer Recycled Content[2]
Acme, TX	0%	0%	0%
Antioch, CA	0%	0%	0%
Ft. Dodge, IA	0%	0%	0%
Las Vegas, NV	0%	0%	0%
Lovell, WY	0%	0%	0%
Newington, NH	30%	30%	0%
Savannah, GA	0%	0%	0%
Tacoma, WA	14%	14%	0%
Wheatfield, IN	94%	94%	0%

[1] Manufacturing locations subject to change. Please visit www.gpgypsum.com and click on Sustainability.
[2] Recycled content subject to change + / - 1.0%.
[3] Based on ICC Evaluation Service Verification of Attributes Report for Dens® brand products issued August 1, 2009. www.saveprogram.icc-es.org

PROTECTION & SAFETY

Mule-Hide maintains Safety Data Sheets on all of its non-exempt products. Safety Data Sheets contain health and safety information for your development of appropriate product handling procedures to protect your employees and customers. Mule-Hide's Safety Data Sheets should be read and understood by all of your supervisory personnel and employees before using Mule-Hide products in your facilities.

ADDITIONAL INFORMATION

The information given on this PDS is subject to change without notice. Always check the Mule-Hide website at www.mulehide.com for the latest information, changes and updates or contact Mule-Hide Products Company at 800-786-1492.

DensDeck is a registered trademark of Georgia-Pacific Gypsum LLC.

DISCLAIMER

The statements provided concerning the material shown are intended as a guide for material usage and are believed to be true and accurate at the time of printing. No statement made by anyone may supersede this information, except when done in writing by Mule-Hide Products Co., Inc. Since the manner of use is beyond our control, Mule-Hide does not authorize anyone to make any warranty of merchantability or fitness for any particular purpose or any other warranty, guarantee or representation, expressed or implied, concerning this material. This product may be eligible for a Mule-Hide warranty, please check the Mule-Hide website at www.mulehide.com or contact Mule-Hide directly at 800-786-1492 for details. Buyer and user accept the product under these conditions and assume the risk of any failure, any injury person or property (including that of the user), loss or liability resulting from the handling, storage or use of the product whether or not it is handled, stored or used in accordance with the directions or specifications. Mule-Hide must be notified in writing of any claims and be given the opportunity to inspect the alleged failure before repairs are made.

Product Data Sheet

USG SECUROCK® Gypsum-Fiber Roof Board

PRODUCT DESCRIPTION

Revision Date: February 2021

USG SECUROCK Gypsum-Fiber Roof Board is a high-performance roof board for use in low-slope roofing systems. Its unique, fiber-reinforced, homogenous composition means the panel is strong and water-resistant all the way through to its core. USG SECUROCK Gypsum-Fiber Roof Board provides low absorption and an exceptional bond in adhered systems, and, because of its homogenous composition, achieves high wind uplift ratings with no risk of facer delamination. Made from 97% recycled material, USG SECUROCK Gypsum-Fiber Roof Board combines superior performance with sustainable design for single-ply roofing systems.

TYPICAL PROPERTIES AND CHARACTERISTICS

Properties	1/4" (6.6 mm)	3/8" (19.5 mm)	1/2" (12.7 mm)	5/8" (15.9 mm)
Thickness, nominal	1/4" (6.4 mm) ± 1/16" (1.6 mm)	3/8" (19.5 mm) ± 1/16" (1.6 mm)	1/2" (12.7 mm) ± 1/32" (0.8 mm)	5/8" (15.9 mm) ± 1/32" (0.8 mm)
Width, Standard	4' (1220 mm)	4' (1220 mm)	4' (1220 mm)	4' (1220 mm)
Length, Standard	4' (1220 mm) and 8' (2438 mm)	4' (1220 mm) and 8' (2438 mm)	4' (1220 mm) and 8' (2438 mm)	4' (1220 mm) and 8' (2438 mm)
Weight, nominal, lbs./sq. ft.	1.57	1.96	3.2	3.2
Flexural Strength, parallel, lbf. min. per ASTM C 473	40	70	110	161
Compressive Strength, psi nominal	1800	1800	1800	1800
Flute Spanability per ASTM E 661	2-5/8"	5"	8"	10"
Permeance, Perms per ASTM E 96	30	26	26	24
R Value per ASTM C 518	0.2	0.3	0.5	0.6
Coefficient of thermal expansion, inches/ inch • °F, per ASTM E 831	8.0×10^{-6}	8.0×10^{-6}	8.0×10^{-6}	8.0×10^{-6}
Linear Variation with Change in Moisture, inches/inch • %RH, per ASTM E 831	8.0×10^{-6}	8.0×10^{-6}	8.0×10^{-6}	8.0×10^{-6}
Water Absorption, % max, per ASTM C 473	10	10	10	10
Surface Water Absorption, nominal grams, per ASTM C 473	1.6	1.6	1.6	1.6
Mold Resistance per ASTM D 3273*	10	10	10	10
Bending Radius	25'	25'	25'	25'

Typical properties and characteristics are based on samples tested and are not guaranteed for all samples of this product. This data and information is intended as a guide and does not reflect the specification range for any particular property of this product.

***ASTM D3273 Mold Resistance Testing** - In independent lab tests conducted on SECUROCK Gypsum-Fiber roof board and SECUROCK Glass-Mat roof board at the time of manufacture per ASTM D3273 Standard Test Method for Resistance to Growth of Mold on the Surface of Interior Coatings in an Environmental Chamber, both panels scored a 10. The ASTM lab test may not accurately represent the mold performance of building materials in actual use. Given unsuitable project conditions during storage, installation or after completion, any building material can be overwhelmed by mold. To manage the growth of mold, the best and most cost-effective strategy is to protect building products from water exposure during storage and installation and after completion of the building. This can be accomplished by using good design and construction practices.

BENEFITS AND SUPPLEMENTAL STATEMENTS

- Exceptional bond and low absorption in adhered systems
- Resistant to moisture and mold
- Exceptional wind uplift performance
- Manufactured from 97% recycled material
- Provides protection from hail and foot traffic when adhered with insulation adhesive

PACKAGING
Factory applied packaging is only intended for protection during transit.

1/4” 4’x4’ Panels	100 pieces	2512 lbs
1/4” 4’x8’ Panels	50 pieces	2575 lbs
3/8” 4’x4’ Panels	80 pieces	2509 lbs
3/8” 4’x8’ Panels	40 pieces	2575 lbs
1/2” 4’x4’ Panels	60 pieces	2650 lbs
1/2” 4’x8’ Panels	30 pieces	2725 lbs
5/8” 4’x4’ Panels	48 pieces	2458 lbs
5/8” 4’x8’ Panels	24 pieces	2525 lbs

STORAGE
When stored outside or at the job site, the roof board must be stored at least 4" above ground level and completely covered with a weatherproof covering such as a tarpaulin. **Warning - Do Not Leave Exposed:** Product must be kept dry at all times. Install only as much roof board as can be covered the same day by the roofing system.

CODE APPROVALS/COMPLIANCE
- Surface Burning Characteristics and Non-Combustibility in accordance with ASTM E84 (CAN/ULC-S102).
- 1/2" and 5/8" thickness – UL Class A in accordance with UL790 (CAN/ULC-S107) (ASTM E108). See the UL Building Materials Directory for more information.
- 5/8" thickness – Meets requirements of Type X per ASTM C1278 and may be used in ULP series designs as a thermal barrier.
- Meets FM Class 1 (FM 4450 and FM 4470).
- Manufactured to conform to ASTM C1278, “Standard Specification for Fiber-Reinforced Gypsum Panel.”

INSTALLATION INSTRUCTIONS
1. All board edges should be loosely abutted and never kicked in tight in typical installations. Please refer to the Typical Properties and Characteristics chart on page 1 to calculate the gap needed for your specific project (coefficient of thermal expansion and linear variation with change in moisture).
2. Install approved fasteners with plates into the USG SECUROCK Gypsum-Fiber Roof Board, flush with the surface. Fasteners should be installed in strict compliance with Mule-Hide’s specifications and details.
3. Locate edge joints on, and parallel to, deck ribs. Stagger end joints of adjacent lengths of USG SECUROCK Gypsum-Fiber Roof Board.
4. Roof boards should never be installed when they are frozen.
5. See properties table for maximum flute span when panels are applied directly over metal decking.
6. For vertical parapet applications, only 1/2" or 5/8"panels should be used.
   Maximum framing spacing is 24" OC.
7. Panel spacing may be needed based on factors like roof deck's size, membrane color, ultimate deck surface temperature and time of year the roof is installed.

Review Mule-Hide specifications and details for complete installation information.

PRECAUTIONS
- Consult Mule-Hide for specific instructions regarding the application of its products to USG SECUROCK Gypsum-Fiber Roof Board.
- For re-roof or re-cover applications, the existing roofing system must be dry throughout prior to application of USG SECUROCK Gypsum-Fiber Roof Board.
- When applying solvent-based adhesives or primers, allow sufficient time for the solvent to evaporate to avoid damage to roofing components.

LEED INFORMATION

Manufacturing Location	Pre-Consumer Recycled Content	Post-Consumer Recycled Content
Aliquippa, PA	97%	0%
Baltimore, MD	97%	0%
Bridgeport, AL	97%	0%
East Chicago, IL	97%	0%
Galena Park, TX	97%	0%
Jacksonville, FL	97%	0%
Norfolk, VA	97%	0%
Plaster City, CA	97%	0%
Rainier, OR	97%	0%
Shoals, IN	97%	0%
Sigurd, UT	97%	0%
Southard, OK	97%	0%
Sperry, IA	97%	0%
Sweetwater, TX	97%	0%
Washingtonville, PA	97%	0%

PROTECTION & SAFETY

Mule-Hide maintains Safety Data Sheets on all of its non-exempt products. Safety Data Sheets contain health and safety information for your development of appropriate product handling procedures to protect your employees and customers. Mule-Hide's Safety Data Sheets should be read and understood by all of your supervisory personnel and employees before using Mule-Hide products in your facilities.

ADDITIONAL INFORMATION

The information given on this PDS is subject to change without notice. Always check the Mule-Hide website at www.mulehide.com for the latest information, changes and updates or contact Mule-Hide Products Company at 800-786-1492.

The trademarks SECUROCK®, the USG Logo™ and related marks are trademarks of USG Corporation or its subsidiaries or affiliates.

DISCLAIMER

The statements provided concerning the material shown are intended as a guide for material usage and are believed to be true and accurate at the time of printing. No statement made by anyone may supersede this information, except when done in writing by Mule-Hide Products Co., Inc. Since the manner of use is beyond our control, Mule-Hide does not authorize anyone to make any warranty of merchantability or fitness for any particular purpose or any other warranty, guarantee or representation, expressed or implied, concerning this material. This product may be eligible for a Mule-Hide warranty, please check the Mule-Hide website at www.mulehide.com or contact Mule-Hide directly at 800-786-1492 for details. Buyer and user accept the product under these conditions and assume the risk of any failure, any injury person or property (including that of the user), loss or liability resulting from the handling, storage or use of the product whether or not it is handled, stored or used in accordance with the directions or specifications. Mule-Hide must be notified in writing of any claims and be given the opportunity to inspect the alleged failure before repairs are made.

Product Data Sheet

LOW-VOC MEMBRANE CLEANER

Revision Date: May 2018

PRODUCT DESCRIPTION

Low-VOC Membrane Cleaner contains 100% EPA-exempted solvents and can be used in a wide range of temperatures to clean EPDM, TPO, PVC and PVC KEE HP membranes.

BASIC USES

Low-VOC Membrane Cleaner is used to clean both new and in-service EPDM, TPO, PVC and PVC KEE HP membranes prior to the seaming process. This cleaner helps to loosen and remove dirt and other contaminants from the membrane surface and leaves a suitable surface for welding or the subsequent application of Tape Primer.

TYPICAL PHYSICAL PROPERTIES

Typical Properties and Characteristics*	
Color	Clear
Solids	0%
Flash Point	0ºF (-18ºC)
Boiling Point	133ºF (56ºC)
Packaging	5-gallon (18.9 liter) closed top pail Cartons of 2 x 1-gallon (3.8 liter) closed top pails
*Typical properties and characteristics are based on samples tested and are not guaranteed for all samples of this product. This data and information is intended as a guide and does not reflect the specification or specification range for any particular property of this product.	

LEED Information	
Pre-consumer recycle content	0%
Post-consumer recycle content	0%
Manufacturing Location	Carlisle, PA
VOC Content*	0 grams/liter*
*100% EPA-exempted solvents	

BENEFITS & SUPPLEMENTAL STATEMENTS

- Easily removes dirt and other contaminates from EPDM, TPO, PVC and PVC KEE HP membranes
- Contains 100% EPA-exempted solvents
- Prepares aged or contaminated TPO, PVC & PVC KEE HP membranes for welding and can significantly improve membrane aesthetics
- Prepares EPDM and TPO membranes for application of primer application
- Can be used in a wide range of temperatures

COVERAGE RATES

Coverage rate depends on the age of the membrane and amount of dirt/debris on the surface. Coverage is approximately 400 square feet (37 m^2) (one surface) per gallon

INSTALLATION INSTRUCTIONS

EPDM

1. Remove as much loose material as possible from the membrane surface where the adhesive or pressure-sensitive product will be applied by brooming or wiping the area with a dry rag. Extreme conditions of accumulated dirt may require a low sudsing detergent and water cleaning (rinse area thoroughly with clean water and allow to dry).

2. Saturate a clean rag with Low-VOC Membrane Cleaner. SCRUB the area in a circular motion. Continue to clean the area, changing rags frequently, until the surface is a consistent color with no streaking. Additional cleaning is required at factory seams (scrub parallel to the seam). Allow to dry.

INSTALLATION INSTRUCTIONS (continued)

3. Apply primer according to product instructions and/or roofing system specification.

Thermoplastics

Low-VOC Membrane Cleaner may be used to remove construction dirt or to prepare aged TPO, PVC or PVC KEE HP membranes prior to welding.

New TPO, PVC or PVC KEE HP

1. Saturate a clean rag with Low-VOC Membrane Cleaner.
2. Wipe the area to be cleaned until the membrane is a consistent color with no streaking.
3. **Allow to dry completely before welding**
4. Weld the cleaned membrane together with an appropriate hot-air welder.

Welding Aged TPO, PVC or PVC KEE HP

1. Using a Scotch-Brite® pad and Low-VOC Membrane Cleaner, scrub the area to be welded. (the cleaner may become white with membrane residue during this application step)
2. Clean all residue from the area to be welded using a rag soaked with Low-VOC Membrane Cleaner.
3. **Allow to dry completely before welding**
4. Weld the cleaned material together using an appropriate hot-air welder.

   Review Mule-Hide Specifications and Details for additional information.

PRECAUTIONS

- Review the applicable Safety Data Sheet for complete safety information prior to use.
- Low-VOC Membrane Cleaner is FLAMMABLE. This product contains materials that are fire and explosion hazards when exposed to heat, flame, or sparks. Store and use away from all sources of heat, flame, or sparks. Do not smoke while applying. Do not use in a confined or unventilated area. Vapors are heavier than air and may travel along ground to a distant ignition source and flash back. A red caution label is required when shipping.
- During application, efforts must be made to prevent fumes from entering the building via air ventilation ducts. Do not place open containers or mix adhesive near fresh-air intake units. When possible, shut down or seal off the closest units.
- Avoid breathing vapors. Keep container closed when not in use. Use with adequate ventilation. If inhaled, remove to fresh air. If not breathing, perform artificial respiration. If breathing is difficult, give oxygen. Call a physician immediately.
- If swallowed, DO NOT INDUCE VOMITING. Call a physician immediately.
- Avoid contact with eyes. Safety glasses or goggles are recommended. If splashed in eyes, immediately flush eyes with plenty of water for at least 15 minutes. Contact a physician immediately.
- Avoid contact with skin. Wash hands thoroughly after handling. In case of contact with skin, thoroughly wash affected area with soap and water.
- Permeation-resistant gloves (that meet ANSI/ISEA 105-2005) are recommended to be worn when using this product to protect hands from irritating ingredients.
- KEEP OUT OF REACH OF CHILDREN

PROTECTION & SAFETY

Mule-Hide maintains Safety Data Sheets on all of its non-exempt products. Safety Data Sheets contain health and safety information for your development of appropriate product handling procedures to protect your employees and customers. Mule-Hide's Safety Data Sheets should be read and understood by all of your supervisory personnel and employees before using Mule-Hide products in your facilities.

ADDITIONAL INFORMATION

The information given on this PDS is subject to change without notice. Always check the Mule-Hide website at www.mulehide.com for the latest information, changes and updates or contact Mule-Hide Products Company at 800-786-1492.

DISCLAIMER

The statements provided concerning the material shown are intended as a guide for material usage and are believed to be true and accurate at the time of printing. No statement made by anyone may supersede this information, except when done in writing by Mule-Hide Products Co., Inc. Since the manner of use is beyond our control, Mule-Hide does not authorize anyone to make any warranty of merchantability or fitness for any particular purpose or any other warranty, guarantee or representation, expressed or implied, concerning this material. Buyer and user accept the product under these conditions and assume the risk of any failure, any injury person or property (including that of the user), loss or liability resulting from the handling, storage or use of the product whether or not it is handled, stored or used in accordance with the directions or specifications. Mule-Hide must be notified in writing of any claims and be given the opportunity to inspect the alleged failure before repairs are made.

Product Data Sheet

PVC MEMBRANE CLEANER

PRODUCT DESCRIPTION

PVC Membrane Cleaner is a clear liquid solvent used to clean PVC membranes that have been exposed to the weather prior to heat welding.

BASIC USES

PVC Membrane Cleaner is used to clean areas on the PVC membrane that has been exposed to weather prior to welding new material. This cleaner helps to loosen and remove dirt and other contaminants from the surface of the PVC membranes and leaves a suitable surface for welding.

TYPICAL PHYSICAL PROPERTIES

Typical Properties and Characteristics*	
Color	Clear
Solubility in water	Complete
Flash Point	-4ºF (-20ºC)
Boiling Point	133ºF (56ºC)
Packaging	5-gallon (18.9 liter) closed top pail

*Typical properties and characteristics are based on samples tested and are not guaranteed for all samples of this product. This data and information is intended as a guide and does not reflect the specification or specification range for any particular property of this product.

LEED Information	
Pre-consumer recycle content	0%
Post-consumer recycle content	0%
Manufacturing Location	Carlisle, PA
VOC Content	VOC Exempt

BENEFITS & SUPPLEMENTAL STATEMENTS

- Easily removes dirt and other contaminates from PVC membranes
- Ready to use, no mixing required
- Improves heat welding of soiled PVC membranes

COVERAGE RATES

Coverage rate depends on the age of the membrane and amount of dirt/debris on the surface. Coverage is approximately 400 square feet (37 m^2) (one surface) per gallon

INSTALLATION INSTRUCTIONS

1. Remove as much loose material as possible from the membrane surface where the adhesive or pressure-sensitive product will be applied by brooming or wiping the area with a dry rag. Extreme conditions of accumulated dirt may require a low sudsing detergent and water cleaning (rinse area thoroughly with CLEAN water and allow to dry).
2. Saturate a clean rag with PVC Membrane Cleaner.
    a. For AGED PVC, use a Scotch-Brite® pad and PVC Membrane Cleaner, scrub the area to be welded
3. Wipe the area to be cleaned until the membrane is a consistent color with no streaking and allow to dry.
4. Weld the cleaned membrane together with an appropriate hot-air welder.

Review Mule-Hide Specifications and Details for additional information.

PRECAUTIONS

1. Review the applicable Material Safety Data Sheet for complete safety information prior to use
2. WARNING! HARMFUL IF SWALLOWED. FLAMMABLE LIQUID. MAY BE IRRITATING TO SKIN AND EYES.
3. Wash thoroughly after handling. Avoid contact with eyes, skin and clothing. Use of permeation-resistant gloves (that meet ANSI/ISEA 105-2005) and safety glasses are recommended. Keep away from heat, sparks, motors and open flame. DO NOT SMOKE WHILE USING. Keep lid closed when not in use. Keep out of the reach of children.
4. If swallowed, DO NOT INDUCE VOMITING. Call physician immediately. In case of eye contact, flush with water for at least 15 minutes. In case of skin contact, wash with soap and water. If irritation develops, call physician.
5. In case of fire, handle as a solvent or gasoline fire. Use dry chemical, carbon dioxide or foam fire extinguishers. Water fog or spray may be used to smother the fire and cool containers. Do not use a solid stream of water to fight fire because it can scatter and spread the fire.
6. **KEEP OUT OF REACH OF CHILDREN.**

PROTECTION & SAFETY

Mule-Hide maintains Safety Data Sheets on all of its non-exempt products. Safety Data Sheets contain health and safety information for your development of appropriate product handling procedures to protect your employees and customers. Mule-Hide's Safety Data Sheets should be read and understood by all of your supervisory personnel and employees before using Mule-Hide products in your facilities.

ADDITIONAL INFORMATION

The information given on this PDS is subject to change without notice. Always check the Mule-Hide website at www.mulehide.com for the latest information, changes and updates or contact Mule-Hide Products Company at 800-786-1492.

DISCLAIMER

The statements provided concerning the material shown are intended as a guide for material usage and are believed to be true and accurate at the time of printing. No statement made by anyone may supersede this information, except when done in writing by Mule-Hide Products Co., Inc. Since the manner of use is beyond our control, Mule-Hide does not authorize anyone to make any warranty of merchantability or fitness for any particular purpose or any other warranty, guarantee or representation, expressed or implied, concerning this material. Buyer and user accept the product under these conditions and assume the risk of any failure, any injury person or property (including that of the user), loss or liability resulting from the handling, storage or use of the product whether or not it is handled, stored or used in accordance with the directions or specifications. Mule-Hide must be notified in writing of any claims and be given the opportunity to inspect the alleged failure before repairs are made.

Product Data Sheet

UNIVERSAL SINGLE-PLY SEALANT

PRODUCT DESCRIPTION

A 100% solids, solvent free, one-part, polyether sealant that provides a weather tight seal to a variety of building substrates. Provides excellent adhesive to substrates such as stone, masonry, ceramic, marble, wood, steel, aluminum, most plastics and composites. Not recommended as a glass-glazing sealant.

BASIC USES

Universal Single-Ply Sealant can be used as a:

- Lap-sealant for White-on-Black EPDM roofing systems
- Sealant for All-Purpose Bar on EPDM, TPO, and PVC systems
- Sealant for counter flashings, copings, and scupper details

TYPICAL PHYSICAL PROPERTIES

Typical Properties and Characteristics*	
Viscosity	850,000 Cps
Tack Free Time	25 minutes depending upon temperature
Cure Time	3-7 days depending upon temperature
Flow, Sag or Sump	None (1/4" bead)
Staining	None
Ozone Resistance	Good
UV Resistance	Excellent
Cured Hardness (Shore A)	17 - 23
Shear Strength	150 PSI
Color	White

*Typical properties and characteristics are based on samples tested and are not guaranteed for all samples of this product. This data and information is intended as a guide and does not reflect the specification or specification range for any particular property of this product.

LEED Information	
Pre-consumer Recycled Content	0%
Post-consumer Recycled Content	0%
Manufacturing Location	Schoolcraft, MI
Solar Reflectance Index (SRI)	N/A

PACKAGING

Packaging	
Weight per Carton	25 lbs
Packaging	25 tubes, 10.1 fluid oz. each (per carton)
Shelf Life	12 months (unopened tube @ 90° F

BENEFITS & SUPPLEMENTAL STATEMENTS

Excellent adhesion to various substrates
VOC free
Versatile applications

COVERAGE RATES

25 feet (7.6 m) per tube or 600 feet (183 m) per carton using a ¼" (6 mm) bead

INSTALLATION TEMPERATURE

Do not install in temperatures below 40° F

INSTALLATION INSTRUCTIONS

1. Universal Single-Ply Sealant is a one-component, ready-to-use material that requires no mixing or preparation.
2. Surface Preparation - Surfaces shall be dry, clean and free of all dust, or contamination, which may harmfully affect the adhesion of the sealant. Cleaning with appropriate membrane cleaner may be required.
   a. Weathered Membrane Cleaner – EPDM and TPO
   b. PVC Membrane Cleaner - PVC
3. A quality caulking gun should be used to ensure ease of application.
4. Universal Single-Ply Sealant typically is tack free in 25 minutes and skins over within 45 minutes. Full cure occurs in 3 to 7 days depending on temperature and humidity.
5. Clean Up - Remove excess sealant adjacent to joint prior to curing with our Weathered Membrane Cleaner or PVC Membrane Cleaner. Uncured sealant can also be removed from tools or equipment with our Weathered Membrane Cleaner or PVC Membrane Cleaner.

PRECAUTIONS

1. Avoid prolonged contact with skin. Uncured adhesive irritates eyes. In case of contact with eyes, immediately flush with water. Consult a physician if ill effects occur.
2. Store in original unopened containers in a cool, dry area. Protect unopened containers from heat and direct sunlight. Elevated temperatures will reduce shelf life.
3. KEEP OUT OF THE REACH OF CHILDREN.
4. For industrial professional use only. May not be repackaged or resold for other than industrial or professional use.
5. See Material Safety Data Sheet for complete safety information before using product.
6. Do not use Universal Single-Ply Sealant in temperatures below 40 degrees F.

PROTECTION & SAFETY

Mule-Hide maintains Safety Data Sheets on all of its non-exempt products. Safety Data Sheets contain health and safety information for your development of appropriate product handling procedures to protect your employees and customers. Mule-Hide's Safety Data Sheets should be read and understood by all of your supervisory personnel and employees before using Mule-Hide products in your facilities.

ADDITIONAL INFORMATION

The information given on this PDS is subject to change without notice. Always check the Mule-Hide website at www.mulehide.com for the latest information, changes and updates or contact Mule-Hide Products Company at 800-786-1492.

DISCLAIMER

The statements provided concerning the material shown are intended as a guide for material usage and are believed to be true and accurate at the time of printing. No statement made by anyone may supersede this information, except when done in writing by Mule-Hide Products Co., Inc. Since the manner of use is beyond our control, Mule-Hide does not authorize anyone to make any warranty of merchantability or fitness for any particular purpose or any other warranty, guarantee or representation, expressed or implied, concerning this material. Buyer and user accept the product under these conditions and assume the risk of any failure, any injury person or property (including that of the user), loss or liability resulting from the handling, storage or use of the product whether or not it is handled, stored or used in accordance with the directions or specifications. Mule-Hide must be notified in writing of any claims and be given the opportunity to inspect the alleged failure before repairs are made.

Product Data Sheet

MULE-HIDE ALL PURPOSE BAR

PRODUCT DESCRIPTION

Rev. May 2020

All Purpose Bar is a specially extruded aluminum bar without sharp edges.

BASIC USES

All Purpose Bar is designed for use as an anchor bar for attachment of the Mule-Hide EPDM membranes. The All Purpose Bar may be installed in the field seam as a batten bar and used at the base of curbs, parapet walls and angle changes as an anchor bar. The All Purpose Bar may also be used with any of the Mule-Hide single-ply membranes as a termination bar. Refer to the Mule-Hide Single-Ply Manuals for specific use and installation instructions.

SPECIFICATIONS

Material:	Extruded Aluminum
Dimensions:	.050" thick x 1" wide x 10' long per piece.
Holes:	1/4" x 3/8" slotted holes on 6 inch centers.
Packaged:	50 pieces per tube
Approx. shipping weight:	40 lbs per tube
LEED Eligible Recycled Content	49%
Manufacturing Location	Cleveland, OH

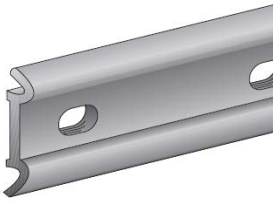

INSTALLATION INSTRUCTIONS

Position All Purpose Bar as per detail drawings (ribs facing outward or ribs facing inward)
When used as edge termination, ensure that water block sealant has been installed as per appropriate detail drawing, position bar with ribs facing substrate (to form sealant pocket) and attach with appropriate fastener into the substrate. When used for base attachment (see appropriate detail) position All Purpose Bar with ribs facing outward and attach with appropriate fastener into substrate.

PROTECTION & SAFETY

Mule-Hide maintains Safety Data Sheets on all of its non-exempt products. Safety Data Sheets contain health and safety information for your development of appropriate product handling procedures to protect your employees and customers. Mule-Hide's Safety Data Sheets should be read and understood by all of your supervisory personnel and employees before using Mule-Hide products in your facilities.

ADDITIONAL INFORMATION

The information given on this PDS is subject to change without notice. Always check the Mule-Hide website at www.mulehide.com for the latest information & updates or contact Mule-Hide Products Company at 800-786-1492.

DISCLAIMER

The statements provided concerning the material shown are intended as a guide for material usage and are believed to be true and accurate at the time of printing. No statement made by anyone may supersede this information, except when done in writing by Mule-Hide Products Co., Inc. Since the manner of use is beyond our control, Mule-Hide does not authorize anyone to make any warranty of merchantability or fitness for any particular purpose or any other warranty, guarantee or representation, expressed or implied, concerning this material. This product may be eligible for a Mule-Hide warranty, please check the Mule-Hide website at www.mulehide.com or contact Mule-Hide directly at 800-786-1492 for details. Buyer and user accept the product under these conditions and assume the risk of any failure, any injury person or property (including that of the user), loss or liability resulting from the handling, storage or use of the product whether or not it is handled, stored or used in accordance with the directions or specifications. Mule-Hide must be notified in writing of any claims and be given the opportunity to inspect the alleged failure before repairs are made.

Water Cut-Off Mastic

Compression Sealant

PRODUCT DATA SHEET

DESCRIPTION

Water Cut-Off Mastic is a one-part, low-viscosity, self-wetting, butyl-blend mastic designed for sealing MuleHide membranes to wood, concrete, metal, plastic and other substrates. This product is an extremely tacky material and will remain so when used with a compression-type seal.

BASIC USES

Water Cut-Off Mastic can be used to seal roofing membranes to stop water penetration into the roofing system. Common uses are at drain terminations and behind MuleHide's All Purpose Bars at wall terminations.

BENEFITS AND SUPPLEMENTAL STATEMENTS

- Excellent adhesion to various substrates
- Provides a durable compression-type seal
- Versatile applications

TYPICAL PROPERTIES AND CHARACTERISTICS*	
Color	Gray
Solids	80%
Flash Point	40°F (4°C) Closed Cup
Service Temperature	-40°F to 200°F (-40°C to 93°C)
Specific Gravity	1.29
Cold-Weather FLexibility	Excellent
Average Brookfield Viscosity	1,320,000 cps

*Typical properties and characteristics are based on samples tested and are not guaranteed for all samples of this product. This data and information is intended as a guide and does not reflect the specification or specification range for any particular property of this product.

LEED INFORMATION	
Pre-consumer Recycled Content	0%
Post-consumer Recycled Content	0%
Manufacturing Location	Carlisle, PA
VOC Content	250 g/L

PACKAGING

- (25) 11-oz tubes/carton. Weight per carton, 28 lbs.

COVERAGE RATES

- Approximately 10 lineal feet per using a ½" diameter bead.

SHELF LIFE

- 1 year (un opened tube).

INSTALLATION INSTRUCTIONS

1. MuleHide Water Cut-Off Mastic is a one-component, ready-to-use material that requires no mixing or preparation.
2. Surface Preparation - Surfaces shall be dry, clean and free of all dust, or contamination, which may harmfully affect the adhesion of the sealant. Cleaning with appropriate cleaner, Weathered Membrane Cleaner (or PVC Membrane Cleaner may be required.
   a. Weathered Membrane Cleaner for EPDM and TPO
   b. PVC Membrane Cleaner for PVC
3. A quality caulking gun should be used to ensure ease of application.
4. Apply a ½" diameter bead of MuleHide Water Cut-Off Mastic between the substrate and the edge of the membrane. The membrane must cover the mastic.
5. Install appropriate termination detail and secure to provide constant compression for the MuleHide Water Cut-Off Mastic. Follow MuleHide's Specification Manual and Details for appropriate methods of termination.

CLEAN UP

- Clean Up - Excess Water Cut-Off Mastic can be removed with our Weathered Membrane Cleaner or PVC Membrane Cleaner. Water Cut-Off Mastic can also be removed from tools or equipment with our Weathered Membrane Cleaner or PVC Membrane Cleaner.

Water Cut-Off Mastic

Compression Sealant

PRODUCT DATA SHEET

PRECAUTIONS

- See Material Safety Data Sheet for complete safety information before using product.
- Water Cut-Off Mastic is FLAMMABLE – contains solvents that are dangerous fire and explosion hazards when exposed to heat, flame or sparks. Store and use away from all sources of heat, flame or sparks. Do not smoke while applying. Do not use in a confined or unventilated area. Vapors are heavier than air and may travel along ground to a distant ignition source and flash back
- Avoid breathing vapors. Keep container closed when not in use. Use with adequate ventilation. If inhaled, remove to fresh air. If not breathing, perform artificial respiration. If breathing is difficult, give oxygen. Call a physician immediately.
- If swallowed, DO NOT INDUCE VOMITING. Call a physician immediately.
- Avoid contact with eyes. Safety glasses or goggles are recommended. If splashed in eyes, immediately flush eyes with plenty of clean water for at least 15 minutes. Contact a physician immediately.
- Avoid contact with skin. Wash hands thoroughly after handling. In case of contact with skin, thoroughly wash affected area with soap and water.

Note: Permeation-resistant gloves (that meet ANSI/ISEA 105-2005) are recommended to be worn when using this product to protect hands from irritating ingredients.

PROTECTION & SAFETY

MuleHide maintains safety data sheets on all of its non-exempt products. Safety data sheets contain health and safety information for your development of appropriate product handling procedures to protect your employees and customers. MuleHide's safety data sheets should be read and understood by all of your supervisory personnel and employees before using MuleHide products in your facilities.

ADDITIONAL INFORMATION

On projects where a MuleHide standard or premium warranty is requested, an authorized MuleHide representative shall inspect all completed work.

The information given on this PDS is subject to change without notice. Always check the MuleHide website at www.mulehide.com for the latest information, changes and updates or contact MuleHide at 800-786-1492.

DISCLAIMER

The statements provided concerning the material shown are intended as a guide for material usage and are believed to be true and accurate at the time of printing. No statement made by anyone may supersede this information, except when done in writing by Mule-Hide Products Co., Inc. ("MuleHide"). Since the manner of use is beyond our control, MuleHide does not authorize anyone to make any warranty of merchantability or fitness for any particular purpose or any other warranty, guarantee or representation, expressed or implied, concerning this material. This product may be eligible for a MuleHide warranty, please check the MuleHide website at www.mulehide.com or contact MuleHide directly at 800-786-1492 for details. Buyer and user accept the product under these conditions and assume the risk of any failure, any injury to person or property (including that of the user), loss or liability resulting from the handling, storage or use of the product whether or not it is handled, stored or used in accordance with the directions or specifications. MuleHide must be notified in writing of any claims and be given the opportunity to inspect the alleged failure before repairs are made.

Product Data Sheet

MULE-HIDE TPO CUT-EDGE SEALANT

PRODUCT DESCRIPTION

Mule-Hide TPO Cut-Edge Sealant is a thermoplastic compound designed for use at the edge of cut Mule-Hide TPO-c membrane seams after the membrane has been welded to itself or to Mule-Hide TPO Coated Metal.

BASIC USES

Mule-Hide TPO Cut-Edge Sealant is required to seal all cut edges of TPO membrane (seams and flashing) where the reinforcing scrim is exposed to weather.

TYPICAL PHYSICAL PROPERTIES

Typical Properties and Characteristics*	
Base	Synthetic Rubber
Color	Clear
Solids	14%
Viscosity	3,500 cps
Flash Point	39°F (4°C)
Resistance to: - Ozone -UV -Water	 Excellent Excellent Excellent
Net Weight / Gallon	7.4 lbs (3.3 Kg)
Packaging	8 – 16 oz bottles per carton (3.8 L) Or two 8 oz. (1.9 L) bottles
Shelf Life	One Year

* Typical properties and characteristics are based on samples tested and are not guaranteed for all samples of this product. This data and information is intended as a guide and does not reflect the specification or specification range for any particular property of this product.

LEED Information	
Pre-consumer Recycled Content	0%
Post-consumer Recycled Content	0%
Manufacturing Location	Rockland, MA
Solar Reflectance Index (SRI)	750 g/L

PACKAGING AND STORAGE

Mule-Hide TPO Cut-Edge Sealant is available in 16 oz. bottles packaged 8 per carton. Job site storage temperatures in excess of 90ºF (32ºC) may affect product shelf life. Should the TPO Cut-Edge Sealant be stored at temperatures below 60ºF (15ºC), restore to room temperature prior to use. Do not allow to freeze.

KEEP OUT OF REACH OF CHILDREN.

BENEFITS & SUPPLEMENTAL STATEMENTS

- Squeeze bottle packaging allows easy, no mess application
- Available in clear for use on various colors of Mule-Hide TPO
- Provides excellent sealing of exposed reinforcement at cut edges of TPO membrane

COVERAGE RATES

Approximately 225' to 275' (70 to 80 m) per 16 oz. bottle when applied with 1/8" (3 mm) bead.
Approximately 115' to 140' (35 to 40 m) per 8 oz. bottle when applied with 1/8" (3 mm) bead

INSTALLATION INSTRUCTIONS

1. All surfaces to be sealed with Cut-Edge Sealant must be clean, dry and free from oil, grease, dirt and other foreign materials.
2. Apply a 1/8" (3 mm) bead of Cut-Edge Sealant from the plastic squeeze bottle to seal cut edges of reinforced TPO Membrane. Do not apply Cut-Edge Sealant on vertical surfaces.
3. Sealant should be tack-free in 2 hours and fully cured in 24 hours depending on weather conditions and application thickness.
   Review Mule-Hide specifications and details for additional information.

PRECAUTIONS

1. Review the applicable Material Safety Data Sheets for complete safety information.
2. TPO Cut-Edge Sealant is FLAMMABLE – it contains solvents that are dangerous fire and explosion hazards when exposed to heat, flame or spark. Do not smoke while applying. Do not use in a confined area or unventilated area. Vapors are heavier than air and may travel along the ground to a distant ignition source and flashback.
3. Avoid breathing vapors. Keep container closed when not in use. Use with adequate ventilation. If inhaled, remove to fresh air. If not breathing, perform artificial respiration. If breathing is difficult, give oxygen. Call a physician immediately.
4. If swallowed, DO NOT INDUCE VOMITING. Call a physician immediately
5. Avoid contact with eyes. Safety glasses or goggles are recommended. If splashed in eyes, immediately flush eyes with plenty of water for at least 15 minutes. Contact a physician immediately.
6. Avoid contact with skin. Permeation-resistant gloves (that meet ANSI/ ISEA 105-2005) recommended. Wash thoroughly after handling. In case of contact with skin, thoroughly wash affected area with soap and water.
7. Jobsite storage temperatures in excess of 90°F (32°C) may affect product shelf life. Should the Cut-Edge Sealant be stored at temperatures below 60°F (15°C), restore to room temperature prior to use.
8. KEEP OUT OF THE REACH OF CHILDREN

PROTECTION & SAFETY

Mule-Hide maintains Safety Data Sheets on all of its non-exempt products. Safety Data Sheets contain health and safety information for your development of appropriate product handling procedures to protect your employees and customers. Mule-Hide's Safety Data Sheets should be read and understood by all of your supervisory personnel and employees before using Mule-Hide products in your facilities.

ADDITIONAL INFORMATION

The information given on this PDS is subject to change without notice. Always check the Mule-Hide website at www.mulehide.com for the latest information, changes and updates or contact Mule-Hide Products Company at 800-786-1492.

DISCLAIMER

The statements provided concerning the material shown are intended as a guide for material usage and are believed to be true and accurate at the time of printing. No statement made by anyone may supersede this information, except when done in writing by Mule-Hide Products Co., Inc. Since the manner of use is beyond our control, Mule-Hide does not authorize anyone to make any warranty of merchantability or fitness for any particular purpose or any other warranty, guarantee or representation, expressed or implied, concerning this material. Buyer and user accept the product under these conditions and assume the risk of any failure, any injury person or property (including that of the user), loss or liability resulting from the handling, storage or use of the product whether or not it is handled, stored or used in accordance with the directions or specifications. Mule-Hide must be notified in writing of any claims and be given the opportunity to inspect the alleged failure before repairs are made.

Product Data Sheet

PVC CUT-EDGE SEALANT

PRODUCT DESCRIPTION

Mule-Hide PVC Cut-Edge Sealant is a free flowing polymeric material designed for use at the cut edge (exposed scrim) of Mule-Hide PVC reinforced Membrane seams after the membrane has been welded to itself or to Mule-Hide PVC Coated Metal.

BASIC USES

Mule-Hide PVC-Edge Sealant is required to seal all cut edges of the PVC membrane where the reinforcing scrim is exposed to weather.

TYPICAL PHYSICAL PROPERTIES

Typical Properties and Characteristics*	
Base	Synthetic Polymer
Color	Clear
Solids	18%
Viscosity	740 cps
Flash Point	1ºF (-17ºC)
Net Weight Gallon	7.8 lbs (3.5 kg)
Resistance to Ozone	Excellent
Resistance to UV	Excellent
Resistance to Water	Excellent
Packaging	12, 16-oz bottles/carton (3.8 L)
Shelf Life	1 Year

LEED Properties	
Pre-consumer Recycled Content	0%
Post-consumer Recycled Content	0%
Manufacturing Location	Rockland, MA
VOC	737 g/L

* Typical properties and characteristics are based on samples tested and are not guaranteed for all samples of this product. This data and information is intended as a guide and does not reflect the specification or specification range for any particular property of this product.

PACKAGING

Mule-Hide PVC Cut-Edge Sealant is available in 16 oz. bottles packaged 12 bottles per carton. PVC Cut-Edge Sealant must be stored in a dry area protected from weather and extreme temperatures until just prior to use. Do not allow the sealant to freeze. Close container tightly after each use.

BENEFITS & SUPPLEMENTAL STATEMENTS

- Squeeze-bottle packaging allows easy, no mess application
- Available in clear color
- Provides excellent sealing of exposed fabric at cut membrane edges

COVERAGE RATES

Approximately 225'–275' (70 – 85 m) per bottle when applied with 1⁄8" (3 mm) bead.

INSTALLATION INSTRUCTIONS

1. All surfaces to be sealed with PVC Cut-Edge Sealant must be clean, dry and free from oil, grease, dirt and other foreign materials.
2. Apply a 1⁄8" (3 mm) bead of PVC Cut-Edge Sealant from the plastic squeeze bottle to seal cut edges of reinforced PVC Membrane. Do not apply PVC Cut-Edge Sealant on vertical surfaces.

INSTALLATION INSTRUCTIONS (Continued)

3. Sealant should be tack-free in 2 hours and fully cured in 24 hours depending on weather conditions and application thickness.
   Review Mule-Hide Specifications and details for additional application information.

PRECAUTIONS

1. Review the applicable Material Safety Data Sheets for complete safety information.
2. PVC Cut-Edge Sealant is FLAMMABLE – it contains solvents that are dangerous fire and explosion hazards when exposed to heat, flame or spark. Do not smoke while applying. Do not use in a confined area or unventilated area. Vapors are heavier than air and may travel along the ground to a distant ignition source and flashback.
3. Avoid breathing vapors. Keep container closed when not in use. Use with adequate ventilation. If inhaled, remove to fresh air. If not breathing, perform artificial respiration. If breathing is difficult, give oxygen. Call a physician immediately.
4. If swallowed, DO NOT INDUCE VOMITING. Call a physician immediately
5. Avoid contact with eyes. Safety glasses or goggles are recommended. If splashed in eyes, immediately flush eyes with plenty of water for at least 15 minutes. Contact a physician immediately.
6. Avoid contact with skin. Permeation-resistant gloves (that meet ANSI/ ISEA 105-2005) recommended. Wash thoroughly after handling. In case of contact with skin, thoroughly wash affected area with soap and water.
7. Jobsite storage temperatures in excess of 90°F (32°C) may affect product shelf life. Should the Cut-Edge Sealant be stored at temperatures below 60°F (15°C), restore to room temperature prior to use.
8. KEEP OUT OF THE REACH OF CHILDREN

PROTECTION & SAFETY

Mule-Hide maintains Safety Data Sheets on all of its non-exempt products. Safety Data Sheets contain health and safety information for your development of appropriate product handling procedures to protect your employees and customers. Mule-Hide's Safety Data Sheets should be read and understood by all of your supervisory personnel and employees before using Mule-Hide products in your facilities.

ADDITIONAL INFORMATION

The information given on this PDS is subject to change without notice. Always check the Mule-Hide website at www.mulehide.com for the latest information, changes and updates or contact Mule-Hide Products Company at 800-786-1492.

DISCLAIMER

The statements provided concerning the material shown are intended as a guide for material usage and are believed to be true and accurate at the time of printing. No statement made by anyone may supersede this information, except when done in writing by Mule-Hide Products Co., Inc. Since the manner of use is beyond our control, Mule-Hide does not authorize anyone to make any warranty of merchantability or fitness for any particular purpose or any other warranty, guarantee or representation, expressed or implied, concerning this material. Buyer and user accept the product under these conditions and assume the risk of any failure, any injury person or property (including that of the user), loss or liability resulting from the handling, storage or use of the product whether or not it is handled, stored or used in accordance with the directions or specifications. Mule-Hide must be notified in writing of any claims and be given the opportunity to inspect the alleged failure before repairs are made.

Product Data Sheet

PVC MOLDED SEALANT POCKET

PRODUCT DESCRIPTION

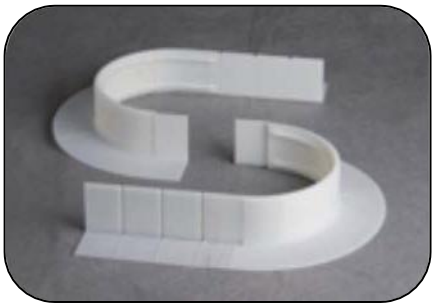

PVC Molded Sealant Pockets are Interlocking, two-piece prefabricated pockets of non-reinforced PVC material used to seal pipe clusters or other irregular shaped penetrations. Pockets length can be adjusted from 7 ½" to 11 ½" by following the pre-molded cutting lines.

BASIC USES

PVC Molded Sealant Pockets are ideal for sealing irregular, hard to flash penetrations in a Mule-Hide system.

BENEFITS & SUPPLEMENTAL STATEMENTS

- Provides a reliable, cost saving method to waterproof odd shaped penetrations
- Pockets are easily adjustable by cutting on pre-molded cutting lines.
- Larger pockets can be created with the use of pocket extensions

SPECIFICATIONS

Typical Physical Properties*	
Color:	White
Size:	11.5" to 7.5" length by 6" oval (29 cm to 19 cm by 15 cm)
Packaging:	5 Pockets per carton
Weight:	0.55 lbs each (0.25 kg)

*Typical properties and characteristics are based on samples tested and are not guaranteed for all samples of this product. This data and information is intended as a guide and does not reflect the specification or specification range for any particular property of this product.

INSTALLATION INSTRUCTIONS

1. Place PVC Molded Sealant Pocket around penetration to determine if pocket requires re-sizing. Pocket must maintain a minimum 1" clearance from penetrations. Pocket can be reduced in size by cutting on pre- molded cut lines or enlarged by using pocket extensions.
2. Clean all surfaces of the PVC Molded Sealant Pocket that will be heat welded, along with all inside surfaces that will contact sealer with PVC membrane cleaner.
3. Using PVC membrane cleaner, also clean surface of membrane to which sealant pocket will be welded, along with surface of penetration(s). Use a primer pad with the cleaner if membrane surface has been exposed for an extended period of time.
4. Place PVC Molded Sealant Pocket around penetration(s), overlapping the two sections of the pocket.
5. Place a piece of cardboard (approximately 4" x 4") between the overlapped are of the Sealant Pocket and the field membrane. Cardboard will help prevent Sealant Pocket from becoming welded to membrane when overlaps are first welded.
6. Using a hand welder, weld the angle change in the overlap area. Use of a seam probe may assist in making this weld. Hand welder temperature is typically set between 5 or 6 for this step.
7. Hand weld the remainder of the horizontal overlap.
8. Repeat steps 4 – 6 to weld the overlap on opposite side of the Sealant Pocket.
9. Position Sealant Pocket so that vertical overlap is against the penetration. This will facilitate heat welding of vertical seam by allowing proper pressure to be applied with 2" silicon roller.
10. Weld both vertical overlaps starting at the angle change and working to the top of the pocket.
11. Position Sealant Pocket in final location and hold in place with tack welds on all four side of flange.
12. Weld entire deck flange to the deck membrane.

INSTALLATION INSTRUCTIONS (continued)

13. Allow welds to completely cool and then check with seam probe. Make any repairs as needed.
14. Make sure all voids or openings between the penetration(s) and membrane inside the pocket are sealed (use caulk or tape for sealing) before filling pocket. Openings will allow sealer to penetrate into the deck and possibly the building.
15. Complete fill Sealant Pocket with Thermoplastic One-Part Sealer. Ensure that sealer is in contact with top rim of Sealant Pocket.

PRECAUTIONS

1. Maximum temperature of penetration(s) cannot exceed 160ºF (71ºC).
2. All surfaces coming in contact with sealer must be first cleaned with PVC membrane cleaner. Tape Primer is NOT USED with PVC.
3. Mule-Hide Thermoplastic One-Part Sealer must completely fill the sealant pocket.
4. There must be a minimum clearance of 1" between sealer pocket and penetration(s).
5. When working on a Mule-Hide PVC roofing system, it is recommended that UV filtering sunglass be worn.
6. Sealant Pockets or PVC membrane that has been exposed to the weather must be first cleaned with PVC membrane cleaner prior to heat welding. Use a primer pad with the cleaner if surfaces have been exposed for an extended period of time.

STORAGE & HANDLING

Store sealant pockets in a cool, shaded area and cover with light-colored, breathable, waterproof tarpaulins.

PROTECTION & SAFETY

Mule-Hide maintains Safety Data Sheets on all of its non-exempt products. Safety Data Sheets contain health and safety information for your development of appropriate product handling procedures to protect your employees and customers. Mule-Hide's Safety Data Sheets should be read and understood by all of your supervisory personnel and employees before using Mule-Hide products in your facilities.

ADDITIONAL INFORMATION

The information given on this PDS is subject to change without notice. Always check the Mule-Hide website at www.mulehide.com for the latest information, changes and updates or contact Mule-Hide Products Company at 800-786-1492.

DISCLAIMER

The statements provided concerning the material shown are intended as a guide for material usage and are believed to be true and accurate at the time of printing. No statement made by anyone may supersede this information, except when done in writing by Mule-Hide Products Co., Inc. Since the manner of use is beyond our control, Mule-Hide does not authorize anyone to make any warranty of merchantability or fitness for any particular purpose or any other warranty, guarantee or representation, expressed or implied, concerning this material. Buyer and user accept the product under these conditions and assume the risk of any failure, any injury person or property (including that of the user), loss or liability resulting from the handling, storage or use of the product whether or not it is handled, stored or used in accordance with the directions or specifications. Mule-Hide must be notified in writing of any claims and be given the opportunity to inspect the alleged failure before repairs are made.

SUMMARY SPECIFICATION
PVC – MECHANICALLY ATTACHED ROOFING SYSTEM

Revision Date: May 13, 2019
This Summary Specification is a brief overview of Mule-Hide Product's specification and requirements for a Mechanically Attached Mule-Hide Reinforced PVC Roofing System and is intended for use as a submittal in a bid package. Specifier's and Mule-Hide Warranty Eligible Applicators must comply with Mule-Hide Product's specifications and requirements prior to design or bid.

Part 1 General

1.01 Description

The Mule-Hide Mechanically Attached Reinforced PVC Roofing System utilizes a (max) 10' wide, scrim reinforced Mule-Hide PVC or PVC KEE HP membrane in thickness of 50, 60, or 80 mil. Approved insulation is attached to the substrate with either Mule-Hide Insulation fasteners and plates or Mule-Hide Helix® Max low-rise foam adhesives. The PVC membrane is attached to the substrate with System Fasteners and Plates. Adjoining sheets are overlapped approximately 5" and seamed together with a min 1.5" wide heat weld.

1.02 Quality Assurance

A. The roofing system must be installed by a Mule-Hide Warranty Eligible Applicator in accordance with installation guidelines and detail drawings as approved by Mule-Hide. Prior written approval from the Mule-Hide Warranty Department is required for all deviations from Mule-Hide's published specifications and details.

B. Projects requesting a Labor and Material Warranty will be inspected by a Mule-Hide Representative to verify that Mule-Hide's installation and material requirements have been met.

C. Mule-Hide roofing systems offer a variety of Underwriters Laboratories (UL), Factory Mutual (FM) and other ratings. Consult the appropriate approval guides and Mule-Hide Products for specific code approvals.

1.03 Submittals

A. To ensure compliance with Mule-Hide's warranty requirements contact the Mule-Hide Warranty Department if any of the following conditions exist.
   1. Specified wind speed warranty greater than 55 MPH.
   2. Building height > 100'
   3. Projects located in coastal or high wind zones.
   4. Pressurized buildings
   5. Cold Storage or Freezer Buildings
   6. Membrane exposed to chemicals

B. Submit a completed Warranty Application form to Mule-Hide prior to biding. Also include fastener pullout testing results as required for non-standard substrates.

C. All projects must have a Mule-Hide warranty application number assigned prior to inspection.

1.04 Product Delivery, Storage, and Handling

A. Deliver materials to the job site in original, unopened containers, with the manufacturer's name, brand name and installation instructions.

B. Store all materials in a dry, clean area protected from the elements, as per manufacturer's recommendations.

1.05 Job Conditions

A. All existing wet or damaged roofing materials must be removed and replaced with new materials.

B. All existing phenolic insulation and sprayed-in-place urethane roofs must be removed.

C. The specifier must determine the use and placement of vapor retarders. Consult ASHRAE (American Society of Heating, Refrigerating, and Air-Conditioning Engineers, Inc.) and NRCA (National Roofing Contractors Association) publications.

E. Coordinate work between all trades to avoid traffic over completed sections of roofing.

1.06 Warranty.

Fees are required for all Labor and Material (System) Warranties. System Warranties must be obtained through a Mule-Hide Warranty Eligible Applicator. All projects requesting a System Warranty must be inspected by a Mule-Hide Representative. Components of the roofing system must be supplied by Mule-Hide. Warranty covers only Mule-Hide supplied materials. Sample warranties are available upon request. Contact Mule-Hide Warranty Department for warranty requirements.

Part 2 Products

2.01 General

The components of this roofing system are to be manufactured, supplied, or approved in writing by Mule-Hide Products.

2.02 Membrane

Mule-Hide White reinforced 50, 60, or 80-mil thick Polyvinyl Chloride (PVC) membrane is used for this system. The membrane is available in 40.5" and 81" widths and in lengths of up to 100' (White membrane). Refer to our Product Data Sheet for physical properties and other information.

2.03 Related Materials

Mule-Hide products include: Reinforced and Non-Reinforced Flashings, Bonding Adhesives, PVC Cut-Edge Sealant, PVC Coated Metal, Membrane fasteners and discs, Thermoplastic One-Part Pourable Sealer, All-Purpose Bar, PVC Walkway Roll, Universal Single Ply Sealant, and other components.

Part 3 Execution
3.01 General

A. Work should begin at the highest point of the roof level and proceed to the lowest point. Work should be completed on a daily bases including flashings, terminations, and daily seals.

B. Prepare the existing roof deck or substrate according to Mule-Hide design guides and full-system specifications prior to applying the new roofing system.

3.02 Roof Deck Criteria

A. A proper substrate shall be provided by the building owner. The structure shall be able to withstand normal construction loads and live loads.

B. Substrate must allow for drainage so that all water is removed within 48 hours after a rain.

3.03 Substrate Preparation

A. Re-cover projects - All wet or damaged materials must be removed and replaced with new materials.

B. Substrate must be clean, level, and smooth so that the insulation lays flat. Fresh applications of bitumen based roof cement must be removed or covered.

3.04 Installation

Refer to the applicable Product Data Sheets and Safety Data Sheets for cautions and warnings.

A. Insulation Attachment

Attach roof insulation with Manufacturer supplied roofing fasteners and plates or low-rise foam adhesives. Attachment rates will vary depending upon type and size of insulation board installed. Consult Mule-Hide Warranty Department for attachment requirements.

B. Membrane Installation and Hot Air Welding

Place membrane over substrate with minimum 5" overlap at lap seams and positioned so that laps will shed water. Allow membrane to relax. After membrane has relaxed, fold membrane back to expose underlying sheet. Install System Fasteners and Plates along seam edge. Sheet width, as well as spacing of Fasteners and plates will vary depending upon wind uplift requirements. Fold sheet back and hot-air weld seams with automatic welder to achieve a min 1.5" wide heat weld. Consult Mule-Hide Warranty Department for attachment requirements.

C. Additional Membrane Securement

The membrane must be secured at the perimeter of each individual roof area, projection, and any angle change that exceeds 2" per lineal foot. Consult Mule-Hide's published detail drawings.

D. Membrane Flashing

All existing base flashings are to be removed. Install new membrane flashings as per manufactures details and guidelines. Flashings must be terminated along top edge as per appropriate Mule-Hide detail.

E. Other Related Work

1. Walkways should be provided in areas where regular rooftop traffic is expected. Walkways are considered a maintenance item and are excluded from the Mule-Hide warranty.

2. Mule-Hide PVC Walkway Rolls are to be installed over clean, dry surfaces, with a minimum 6" spacing over field seams. Hot air weld the perimeter of the Walkway Roll to the field membrane.

3. Concrete pavers may be used if installed over one layer of HP Protection Mat.

4. Copings, counter flashing and other metal work shall be fastened to resist wind uplift and prevent buckling. Metal should be sealed to prevent moisture infiltration.

This summary specification represents the applicable information available at time of publication. Mule-Hide reserves the right to change this information at any time. Contact Mule-Hide Products or visit our website at www.mulehide.com for the latest updates, changes, or modifications to this summary specification.

MULE-HIDE PRODUCTS CO., INC.
PREMIUM SINGLE-PLY NDL SYSTEM WARRANTY FOR COMMERCIAL BUILDINGS Ver.4.5

Serial Number:

Building Owner:

Building Address:

SAMPLE

Effective Date: **Expiration Date:**

In consideration of the warranty fee paid by or on behalf of the above-named Building Owner ("Owner") and the representations to Mule-Hide Products Co., Inc. ("Mule-Hide") by the independent contractor hired by the Owner and registered with Mule-Hide as eligible to apply for warranties ("Eligible Contractor") that the Mule-Hide Roofing System ("System") has been constructed in accordance with Mule-Hide specifications, Mule-Hide warrants to Owner, subject to the following Terms, Conditions and Limitations, that Mule-Hide will be responsible for the repair of leaks in the System installed on the Building for the warranty period indicated above, however, that the System shall have been installed by Eligible Contractor using Mule-Hide products and/or other materials supplied or approved in writing by Mule-Hide. "System" for purposes of this Warranty is defined as the following Mule-Hide brand materials: Single-ply Membrane and Flashing Accessories, Adhesives and Sealants, Insulation, Fasteners, Fastener Plates, Fastening/Termination Bar, Metal Edging/Coping, any other Mule-Hide brand products or other components supplied or approved by Mule-Hide and shall exclude the roof deck, wood nailers, pre-existing roof system to which the new system is applied or covers, support system, and metal flashings (non-Mule-Hide approved or supplied) and any components of the roofing assembly not supplied or approved in writing by Mule-Hide. The watertight integrity of walls, parapet walls and other adjacent structures is not covered. The paint finish on any Mule-Hide labeled metal product that is part of the System is not covered by this Warranty. Metal finish warranties can be obtained by contacting Mule-Hide directly. There is no dollar limitation (NDL) on covered repairs. Any dispute, controversy or claim between Owner and Mule-Hide arising out of or related to this Warranty or the Building shall be settled by final and binding arbitration in accordance with the rules of the American Arbitration Association for the Construction Industry. By accepting this Warranty, Owner represents that the Building is a commercial structure and is not used for owner's personal or household purposes. In consideration of the protection afforded by this Warranty, Owner accepts the following Terms, Conditions and Limitations:

1. Within thirty (30) days after Owner or any of its agents discovers (or a reasonable person in Owner's or agent's position would have discovered) any leak, Owner must give written notice (the "Notice") to Mule-Hide Warranty Claims (notice to the contractor, a re-seller or an authorized Mule-Hide Sales Representative is not notice to Mule-Hide Warranty Claims) of the existence of each leak in the System or Mule-Hide will have no responsibility for the repairs.

2. Mule-Hide shall have the right to inspect the System after receiving the Notice to determine the cause(s) of the leak before incurring any obligation hereunder. In the event the cause of the leak is not covered by the Warranty, Owner will pay to Mule-Hide a reinspection fee and expenses (in accordance with Mule-Hide's standard charges) promptly after Mule-Hide issues an invoice for same. If, upon Mule-Hide's inspection, Mule-Hide determines that the leaks in the system are caused by defects in Mule-Hide's materials or workmanship of the Contractor, Owner's remedies and Mule-Hide's liability shall be limited to Mule-Hide's repair of the portion of the System determined to be leaking using methods determined to be suitable at Mule-Hide's discretion. In no event shall Mule-Hide be obligated to perform additional services (e.g. roof drains, equipment relocation, old roof removal, etc.) or provide materials or services beyond the scope of the Owner's original contract with Contractor.

3. This warranty may be transferred provided the original owner follows the Mule-Hide Warranty Transfer Procedure. Contact Mule-Hide Technical Department at 1-800-786-1492 for a copy of the procedure.

4. If the System is damaged by any of the following causes, this Warranty shall not apply to such damages:
   (a) Any natural cause, including but not limited to lightning, the infestation or presence of plant, mold, fungi, bacteria, insects or an animal, or earthquake, peak gust wind speeds in excess of **55** mph, hurricane, tornado, hail greater than **0** inches in diameter (as reported by the National Climatic Data Center), or any debris resulting from any of these causes. Mule-Hide shall not be responsible for any changes in appearance or surface imperfections caused by hail events.
   (b) Acts of negligence, accident, misuse or abuse, including but not limited to vandalism, fire, falling object, civil disobedience, or acts of war.
   (c) The use in the System of metal work, coping, counter-flashing, rain-carrying components or other material not furnished or otherwise approved in writing by Mule-Hide.
   (d) Environmental fallout, chemical attack, use of products or materials incompatible with the System or the presence within or outside the Building of any commercial or industrial solvent, acid, caustic fluid, petroleum product, wax, grease, absorbent, clay or plasticizer.
   (e) Negligence of a contractor who is not the Eligible Contractor, or failure of the material or the workmanship provided by such a contractor.
   (f) Interior condensation and any resulting damage or condition, including but not limited to, mold, fungi or bacteria.
   (g) The infiltration of moisture in, through or around the building through any mechanism other than through the System, including but not limited to, any structural defect, wall, or other Building structure, or anything that penetrates the System, including but not limited to any vent, coping or rooftop equipment and any resulting damage or condition, including but not limited to, mold, fungi or bacteria.
   (h) Any deterioration, failure, settlement or movement of building components, including but not limited to the roof structure, roof substrate (pre-existing roof system or retained components), roof deck, wood nailers, walls, mortar, HVAC units, skylights, etc. or the expansion or contraction of any counterflashing or metal work.
   (i) Defects in the building, pre-existing conditions or roof design, including but not limited to any conditions that prevent positive drainage.

5. Mule-Hide may, in its discretion, suspend or cancel this warranty if the roof is damaged by any cause listed above as an exclusion from coverage that may affect the integrity of water tightness of the roof.

6. Occurrence of any of the following shall render the Warranty cancelable in Mule-Hide's sole discretion and terminate obligations under this Warranty:
   (a) Alteration or repair made on or through the roof without prior written authorization from Mule-Hide.
   (b) Placement upon or attachment to the roof of any object (including but not limited to any structure, fixture or utility) without prior written authorization from Mule-Hide.
   (c) Owner's or the Building occupant's failure to use reasonable care in maintaining the roof including, but not limited to, items listed on the reverse side of this document titled "Mule-Hide Owner's Care and Maintenance Information".
   (d) Internal positive pressure condition which causes or contributes to a partial or total failure of the roof.
   (e) Owner's sale of the Building or purported assignment of this Warranty, except as provided in (3), above.
   (f) Owner's failure to comply with every Term, Condition and Limitation in this Warranty.

7. Mule-Hide, its agents, employees and contractors shall have unrestricted access to the roof during regular business hours. By accepting this Warranty, Owner agrees to arrange for removal of water, snow, ice, equipment, any paving or overburden at Owner's expense to allow for investigation or repairs to be made. The Owner is responsible to provide safe access to the roof.

8. All bills for installation, supplies and services shall have been paid in full to Eligible Contractor and all material suppliers before Mule-Hide incurs any obligation or liability under this Warranty. It is the Owner's sole responsibility to confirm that payment has been made to Eligible Contractor and all material suppliers.

9. The failure of Mule-Hide at any time to assert or enforce any Term, Condition and Limitation shall not be construed to be a waiver thereof, or of any other Term, Condition or Limitation. Unless otherwise agreed in advance and in writing, any inspections made by Mule-Hide are limited to a surface inspection only. All inspections are for Mule-Hide's sole benefit, and do not constitute a waiver of any terms and conditions herein.

10. Any and all other express warranties are superseded hereby and this Warranty is in lieu thereof.

11. Owner acknowledges that the Eligible Contractor is not an agent or other legal representative of Mule-Hide. Mule-Hide is not liable for any promise, representation or other responsibility of Eligible Contractor or any other party. This warranty is not binding upon Mule-Hide unless executed by an executive officer of Mule-Hide or a duly authorized employee of Mule-Hide's Warranty Department. No representative or employee of Mule-Hide, or any other party, may alter this Warranty without the prior written consent of an executive officer of Mule-Hide. This Warranty constitutes the entire understanding of the parties with respect to the subject matter contained herein, and revokes and supersedes all prior agreements, whether written or oral, between the parties. This Warranty shall take precedence over any other documents or representations (whether oral or written, and by whomever made) which may conflict with this Warranty.

12. The predominant factor in the construction and performance of the System is the design and construction services of the contractor and not the sale of goods. In addition, Owner acknowledges that Owner had a duty hereunder to exercise reasonable care in the selection of a contractor.

13. Mule-Hide is not liable for the cleanliness or discoloration of the System caused by environmental conditions including but not limited to dirt, pollutants or any biological agent.

MULE-HIDE DOES NOT WARRANT PRODUCTS UTILIZED IN THIS INSTALLATION WHICH IT HAS NOT FURNISHED; AND SPECIFICALLY DISCLAIMS LIABILITY, UNDER ANY THEORY OF LAW, ARISING OUT OF THE INSTALLATION AND PERFORMANCE OF, OR, DAMAGES SUSTAINED BY OR CAUSED BY, PRODUCTS NOT FURNISHED BY MULE-HIDE.

Building Owner's Roof Care and Maintenance Guidelines ver.2.03

Following are guidelines on how to care for your roofing system to help ensure a long useful service life. The manufacturer's warranty is not a maintenance program or agreement. There are various items associated with your roof system that are not covered under the warranty. It is the responsibility of the Building Owner to regularly inspect and maintain their roofing system.

Mule-Hide strongly recommends the Building Owner institutes an annual inspection program with written documentation of any activities on the roof. Maintain a log of maintenance procedures and people accessing the roof. This aids the Building Owner in determining the source of any damage to the roof. The roofing system should be inspected at least twice a year (once in the spring and once in the fall) and after every major storm. These inspections should be performed by a Mule-Hide Warranty Eligible Contractor or someone specially trained in roofing systems.

READ YOUR WARRANTY CAREFULLY BEFORE EXCUTING ANY ROOF-TOP WORK OR FILING OF A CLAIM.
Understand the terms and conditions to avoid adversely affecting the warranty.

General Guidelines

1. Keep the roof surface clean of debris, especially at drain areas to avoid clogging. Good roofing practice suggests that water not be allowed to remain on the roof for more than 48 hours after a rain. Keeping the roof clear of debris will allow for proper water run-off and avoid overloading the roof with standing water.

2. Keep chemical and petroleum products (acid, chemicals, solvents, greases, oils or any liquids containing petroleum products) off the membrane to avoid degradation. If swelling occurs, contact Mule-Hide immediately.

3. Do not exhaust kitchen wastes (such as but not limited to vegetable oils or animal fats) directly onto the roof surface.

4. TPO and PVC membranes may be used for restaurant roofs but must have a rooftop maintenance program in-place to ensure that accumulations of animal fats/grease are regularly removed and the membrane surface is cleaned periodically.

5. Walkways must be provided if regular rooftop traffic is required, such as routine servicing of rooftop equipment. Exercise caution when not walking on walkways, especially on white roofing surfaces as ice or frost build-up may not be visible. All membranes and coatings are slippery when wet.

6. When it is necessary for workers to be on the roof to service rooftop equipment, workers should be cautioned to use walkways (when provided) and to exercise care with their tools and equipment to avoid causing damage to the roof system that may result in leaks. It is recommended that the Building Owner or property manager keep a "Roof-top Maintenance and activity Log" to track dates and activities by personnel or other trades.

7. Handprints, footprints, general traffic grime, industrial pollutants and environmental dirt and debris may be cleaned from the roof surface by scrubbing with detergent and water, followed by rinsing with clean water. To maximize and maintain reflectivity, it is suggested that white surfaces be cleaned once every two years.

8. Keep roof maintenance items, such as counterflashings, metal curbs, metal ductwork, etc., sealed watertight at all times. All exposed mastic and sealants regardless of the purpose or function, are required maintenance items to be remediated by the Building Owner, including but not limited to pitch pans and metal flashing sealants.

9. Loss of granules from mineral surfaced membranes is typical and not a manufacturing defect. In cases of granule loss that becomes more noticeable, additional surfacing may be applied as directed by Mule-Hide.

10. Protective coating systems may oxidize and weather, losing overall dry film thickness. This is normal and not a defect in the material.

11. When performing inspections, examine all areas adjacent to the roof, parapet walls and adjoin structures. Damage to items such as masonry, failing mortar joints, loose or missing sealants, loose stone or tiles, loose or improperly sealed counterflashings, etc., may be the source of leaks that are inadvertently blamed on the roofing system. These items need to be addressed by properly trained personnel to avoid damage to the roof system.

12. If any changes are to be made to the roof system such as but not limited to equipment changes, additions or removal, modifications to the roof systems, etc., contact Mule-Hide for prior approval. Work directly related to the roof system must be completed by a Mule-Hide Warranty Eligible Contractor.

13. If you have a leak, check for the obvious such as clogged drains, broken skylights, loose counterflashings, broken pipes, leaking HVAC units or damage caused by service personnel or storms. Note: When leaking occurs, items such as heavy or light rain, wind direction and speeds, temperature and time of day are all important clues for tracking suspected leaks. Does the leak start and stop with the rain, or, does leaking continue after rain has ceased?

If you believe that the leak may be covered under a Mule-Hide warranty, please notify Mule-Hide Warranty Claims with written notice in accordance with the warranty terms. For temporary repairs, only use products that are compatible with the roof system installed. Do not use any asphalt products on any single-ply roof system as use of such product may cause additional damage to the roof system. Please refer to the Mule-Hide Website (www.mulehide.com) for compatible products that may be used for temporary repairs on your roof system. Non-compatible products used that cause damage to the roof system will have to have that area removed and replaced at the Building Owner's expense. Compliance with the above items will aid in assuring a durable, watertight roof system.

Mule-Hide Product Co., Inc.
P.O. Box 1057
Beloit, WI 53512-1057
Phone: 800-786-1492