INTRODUCTION
to the
MULE-HIDE PRODUCTS CO., INC.
TPO SPECIFICATION MANUAL

The main purpose of this manual is to create a better understanding of specifications and conditions for the installation of Mule-Hide Roofing Systems. This information is intended to assist building owners, architects and design professional in selecting a suitable roof system.

Each successful roofing project is the product of good design, proper materials and installation. Mule-Hide Products Co., Inc. is committed to help you achieve success by helping you to knowledgeably select and use Mule-Hide products. In addition to our quality products, Mule-Hide offers a full-time technical service department and one of the most comprehensive performance warranty programs in the industry.

Mule-Hide is not, under any circumstance, responsible for the design and construction of any building nor responsible for the adequacy of any structure to support a roof system. Under no circumstances will Mule-Hide be responsible for any roofing system failures due to design errors, structural defects of any building components or damages caused by other trades. Mule-Hide's review of any specifications or building plans is for the sole purpose of making recommendations concerning details for the installation of the Mule-Hide roofing system products.

Mule-Hide reserves the right to make changes or modifications to this publication at any time without prior notice. Although Mule-Hide has attempted to take care in preparing these specifications, no representation or warranty can be made in connection with these specifications. Mule-Hide expressly disclaims all representations and warranties, whether expressed or implied, including warranties of merchantability and fitness for a particular purpose.

RUSS™ is a registered trademark of Carlisle SynTec Incorporated.

MULE-HIDE PRODUCTS CO., INC.
P.O. Box 1057, Beloit, WI 53512-1057
Phone: 800-786-1492 Fax: 888-218-7838
Web: www.mulehide.com

TABLE OF CONTENTS

TPO SPECIFICATION MANUAL

While this manual is published on a periodic basis, no manual can explicitly cover every condition or detail on a specific project or provide a detail for every new design or new product. For conditions or details not covered in this manual , please contact your local Mule-Hide representative, the Mule-Hide Technical Department or Customer Service Department for assistance.

PLEASE CONSULT THE MULE-HIDE WEBSITE FOR THE MOST CURRENT INFORMATION & LATEST UPDATES

MULE-HIDE PRODUCTS CO., INC.

P.O. Box 1057 Beloit, WI 53512-1057

Phone: 800-786-1492 Fax: 888-218-7838 Web: www.mulehide.com

SECTION 1

MULE-HIDE PRODUCTS CO., INC.

TPO SYSTEM GUIDELINES

How to Install Mule-Hide TPO Membranes

Equipment Needed to Install Mule-Hide Heat-Weld Membranes

Insulation Guidelines

Fastener Guidelines

PLEASE CONSULT THE MULE-HIDE WEBSITE FOR THE MOST CURRENT INFORMATION

Mule-Hide Products Co., Inc.
How to Install Mule-Hide Reinforced TPO Membranes

BASIC CONSIDERATIONS

The installation of a Mule-Hide roof involves procedures and techniques that have been carefully conceived and engineered to help you provide your customers with the most reliable, lowest maintenance roofing system available.

Successful roof installations do not just happen; they must be carefully planned and implemented. An understanding of the basic properties of the Mule-Hide system can help the contractor exploit its unique strengths and to avoid unnecessary problems. Keep the following in mind as you go through this section: Mule-Hide TPO Heat-Weld Membranes are polyester scrim-reinforced, single-ply roofing systems designed for mechanical, fully adhered, and ballasted attachment with hot-air welded seams. Mule-Hide TPO membrane is formulated with polymers that are highly resistant to sunlight and weather as well as many chemicals.

The remainder of this section covers the proper methods of performing each step of the installation. This material was written to provide the contractor with practical, detailed information that can help ensure the proper performance of each step of the Mule-Hide installation.

THE ADVANTAGE OF HOT-AIR WELDABILITY

The unique hot-air weldability of both the scrim-reinforced TPO field sheet membrane and non-reinforced TPO flashing membrane gives the contractor a special advantage when completing roof details. When used in connection with roofing details, hot-air welding provides the same assurance of watertightness as in field seaming - assurance that comes from permanently fused seams that can be as strong as the Mule-Hide TPO Membrane itself.

GENERAL APPROACH

The general approach to complete common roofing features involves hot-air welding, Mule-Hide Bonding Adhesive, Mule-Hide TPO Cut Edge Sealant, and terminating flashings. Common roofing features include such details as wall flashings, vertical and flat edge terminations, inside corners, outside corners, round shapes, drains, curbs and pitch pockets. Mule-Hide recommends that you rely on pitch pockets only as a last-ditch measure, although from time to time they can provide efficient means of dealing with particular problems concerning irregularly shaped projections.

As a general approach, the Bonding Adhesive is used to adhere, as appropriate, field sheet membrane to features such as curbs, vents, and parapets. Then hot-air welding is used to seam membrane overlaps and Mule-Hide TPO Cut Edge Sealant is applied to cut edges of reinforced membrane.

IMPORTANT: All roofing work must follow Mule-Hide TPO Standard Details. Any failure to complete details to Mule-Hide specifications can stand between you and a favorable inspection - and therefore, a Warranty. If no TPO Standard Detail applies to a particular requirement of your job, sketch the way you think it should be handled and submit the sketch with your Pre-Job Survey for approval. Consult Mule-Hide's Technical Department if you have any questions about the Mule-Hide TPO Standard Details.

NOTE: No deviation from Mule-Hide TPO Standard Details is authorized until: (1) it is submitted by the contractor in writing or sketch form for review and the job file, and (2) is approved by Mule-Hide's Technical Department.

PREPARING THE SUBSTRATE

The substrate under the Mule-Hide TPO Membranes must be properly prepared. The general goal of this preparation is to provide a smooth compatible surface for the insulation (when required) and the membrane.

The contractor should follow good roofing practice when evaluating and preparing the surface. For example, as general practice, especially on reroofing jobs, prepare the entire roof before starting the Mule-Hide installation in order to minimize contamination and ensure the integrity of the seams. By keeping in mind the general properties of the Mule-Hide TPO Membrane you can help evaluate unusual situations when they arise; but if you are in doubt as to the resolution of problems not addressed on the Mule-Hide TPO Standard Details or Specifications, contact the Mule-Hide Technical Service Department for advice.

New Roofing Installations

On new roofing installations, keep the deck and insulation surface free of debris and trash. Note precisely the location of structural members, electrical conduits, and gas and water lines under the deck, as well as general deck characteristics that will affect the placement of mechanical fasteners - such as the direction and spacing of steel deck flutes.

Follow good roofing practice in the loading of the roof with Mule-Hide Heat-Weld Membrane rolls. Stack carefully and store in a cool, clean, dry location.

CAUTION: Keep the packaging protecting the Mule-Hide Heat-Weld Membrane intact until ready to use.

Reroofing Installations

To ensure a successful reroofing job, you must be aware of the conditions that led to the need for the reroof. It may be that leakage has occurred from sources other than the roof. If so, be sure that the Building Owner or Operator is aware of any such sources as early as possible and understands that the application of a new roof may not solve all of the leakage problems. Some useful points to cover in your evaluation follow.

Investigate existing leakage conditions thoroughly. Before the installation begins, be sure that a thorough investigation of existing roof conditions has been performed and that a review of “as-built” plans and specifications for the building, as well as the assessment of current conditions, has determined that the building is structurally sound and otherwise suitable for reroofing.

It is helpful to know such details as the nature, extent, and duration of leaks that may have occurred through the old roofing. Because leaks often occur from sources such as building parapets, walls, and windows, a new roof may not solve all leakage problems. Check the building walls for dampness, spalling brick, large stress cracks, and efflorescence (salty, powdery deterioration) - signs of problems that extend beyond the roof itself. Look for stains inside the building and be sure that all sources of such stains are known.

Evaluate existing roof conditions: The cause(s) of poor drainage conditions should be thoroughly understood and solved as part of the reroofing process. For example, check for signs of ponding, a sure sign of poor drainage. If ponding occurs, determine the extent and duration of ponding. If needed, are overflow scuppers or other means of supplemental drainage present? Determine if a provision should be made for their installation.

Are there noticeable splits in the existing roofing? Splits may indicate a change in substrate or metal deck direction; they could be indications that an expansion joint is required.

Be sure that you know ALL types and conditions of substrate that are present, the spacing of structural members under the deck, the direction and gauge of a steel deck, the thickness of concrete, thickness of insulating fill (if present), drain placement, slope, and the location of expansion joints.

Make a roof drawing: Once on the roof, work up a detailed roof drawing on the Mule-Hide Pre-Job Survey showing all dimensions, drains, mechanical equipment, penetrations, skylights, monitors, parapet walls, and other features. You will have to submit your drawing(s) as part of the Warranty Application.

Removal (tear-off) of existing roofing: Your crews should remove no more roofing and insulation from a given area of the roof than what can be completely covered with new insulation and Mule-Hide TPO membrane that day. On tear-offs, ALL gravel and debris will have to be broomed from the deck.

Reroofing over existing roofing: When reroofing over old roofing, broom ALL gravel and debris from the old roofing surface, cut out blisters and fishmouths, and seal. When reroofing over existing single ply membranes, cut the existing membrane in 10' x 10' grids. Remove and replace wet insulation as required. Tear off all existing flashings or cover with a suitable material (plywood, OSB, metal, etc.).

LAYING INSULATION

If old insulation is present and is to be retained, you should determine if it is wet. The surest diagnostic technique is by taking and evaluating a series of roof cuts. Alternatively, three techniques currently available to make this determination by indirect means are: nuclear moisture detection, infrared thermography, and electrical capacitance.

These techniques provide measurements of factors that can be associated with the presence of moisture. As such, they can help point out certain inconsistencies in the existing roof system but do not necessarily provide valid measures of moisture. Limited direct verification is always advisable.

Whatever your method of investigation, wet insulation must be removed and replaced. The presence of wet insulation must be noted on the Pre-Job Survey. These areas must be designated on the roof diagram.

Insulation must be laid and fastened according to its manufacturer's specifications and at a minimum must follow Factory Mutual's suggested guidelines.

The longest dimension of the insulation should run PARALLEL to the flutes of a steel deck and PERPENDICULAR to the direction in which the Mule-Hide field sheet will be unrolled. Regardless of the approved lay of the insulation board, the membrane field sheet direction must be proper with respect to the deck construction, as explained in "Installing Membrane - Field Sheet Membrane."

Lay no more new insulation than will be covered by the roofing membrane on the same day. Work on any given area of the roof must be made completely watertight at the end of each workday.

Good roofing practice dictates that care should be taken to achieve smooth transitions between insulation boards and roof areas. Always consider proper drainage and adjust thicknesses accordingly to achieve proper drainage. The membrane should never have to bridge an area and transitions should never cause ponding.

INSULATION ATTACHMENT

Mechanically Attached Systems

For a Mechanically Attached System, the roof insulation is attached to the substrate in order to keep the insulation in place. The individual boards are typically attached as follows:

4' x 8' Insulation Boards, less than 2" thick – 6 fasteners/plates per board over entire roof area.

4' x 8' Insulation Boards, 2" or more thick – 5 fasteners/plates per board over entire roof area.
4' x 4' Insulation Boards – 4 insulation fasteners/plates per board over entire roof area, regardless of thickness.

The 3" Galvalume Stress Plate must be used with a minimum #12 Drill Point Fastener to fasten roof insulation. See page 3 of the Fastener Guidelines portion of this manual for basic fastener patterns. Consult the Mule-Hide Technical Department for additional questions.

Fully Adhered Systems

In a Fully Adhered System, the membrane is bonded directly to the insulation or substrate. Therefore, the strength, or wind uplift resistance of a Fully Adhered System is dependent upon the type and thickness of the *top most layer* of insulation and the method/density of insulation attachment (fasteners and/or foam adhesive). This requires increased insulation attachment for a Fully Adhered System over a Mechanically Attached one.

The density of insulation attachment used varies across the roof area. In the center of the roof, called the Field, the uplift pressures are calculated and the appropriate density of insulation attachment is specified to meet the design uplift pressures. Uplift pressures are greater in the Perimeter and Corner areas of the roof, resulting in the need to increase insulation attachment in those areas. It is the Field attachment requirements that set the requirements for the Perimeters and Corners. The Perimeter attachment requirements are generally 50% more than what is required in the Field and the attachment requirements in the Corners are generally 100% more that what is required in the Field.

The 3" Galvalume Stress Plate must be used with a minimum #12 Drill Point Fastener to fasten roof insulation. Basic insulation attachment patterns can be found in the Fastener Guidelines portion of this manual, beginning on page 3. More specific information is available in our Design Summary's located in Section 2 of this manual. Contact Mule-Hide Technical Department for addition information.

Low rise foam adhesives can be used in lieu of mechanical fasteners to attach insulation to the roof deck. Roof decks that are non-conducive to mechanical attachment, such as concrete, gypsum, lightweight concrete, or cementitious wood fiber, are prime candidates for the use of low rise foam adhesives to attach roof insulation. The Mule-Hide Technical Department must be contacted prior to bidding any project where low rise foam adhesives are being considered.

MEMBRANE ATTACHMENT

Mechanically Attached Systems

Perimeter Enhancements

To ensure that your installation meets the Mule-Hide specifications, refer to TPO Standard Details as you read this section.

CAUTION: Keep the protective packaging of the Mule-Hide Heat-Weld Membrane intact until ready to use.

NOTE: Half-sheet dimensions are 50% to 60% of the width of the field sheet. The field sheets must always be installed perpendicular to steel deck flutes, plywood deck joints, or deck plank direction, as appropriate. All field seams shall be shingled with the flow of water. Mule-Hide requires a minimum perimeter enhancement of 1 perimeter half sheet on all TPO Mechanically Attached systems. Consult TPO Tech Bulletin MA02-2006 for TPO half sheet requirements.

There are three methods for perimeter enhancements. Perimeter Enhancements can be formed by using individual 4' to 6' wide sheets, by subdividing 8' or 10' wide field sheets using 10" wide Pressure-Sensitive RUSS strip, or by installing rows of seam fastening plates through the top of the

membrane and patching with appropriate materials.

1. Individual Perimeter Sheets Method

   Position the half-sheets (either 4’ or 6’ wide) along the perimeter of the roof over the acceptable insulation/underlayment. Mechanically attach the half-sheets using Seam Plates and appropriate HD fasteners at the designated spacing dictated by the building height and roof deck type. TPO membrane is always fastened with 2.4” Seam Plates and minimum #14 HDP fasteners.

   a. Over steel roof decks

      All seams and fastener rows must run perpendicular to the ribs of the deck. This requirement will necessitate that perimeter sheets on two sides of the roof (where the seams would be running parallel with the ribs of the deck) be turned so that the seams in the perimeter sheets run perpendicular to the deck ribs. See Details MHT-FM-308B, MHT-FM-310B, or MHT-FM-312B.

2. 10” RUSS Method

   When **field sheets are positioned parallel to a roof perimeter, 10" wide TPO Pressure-Sensitive RUSS** (with 3” wide tape each side) shall be placed approximately down the center of the 8’, 10', or 12' wide TPO field membrane sheets. When a 10” RUSS divides a field sheet in half, two perimeter sheets are created.

   Unroll and position the 10" wide TPO Pressure-Sensitive RUSS over the insulation/substrate where membrane securement is desired. Locate the RUSS with the fastener markings and tape facing upwards.

   Position Mule-Hide Seam Plates at the same spacing as the field sheets and secure with an appropriate fastener. Do not fasten plates over top of the release liner as this will cause the liner to tear when removed. 10” RUSS is always fastened with 2.4” Seam Plates and minimum #14 HDP fasteners.

   Position the field sheet membrane and **thoroughly clean the underside of the TPO membrane using Weathered Membrane Cleaner if necessary.** (The entire membrane surface where the tape is to contact must be clean. The adhesive on the TPO Pressure Sensitive RUSS will not adhere to dusted / dirty surfaces). Apply Tape Primer to the underside of the membrane and let dry until tacky, remove the plastic release liners, and mate the field sheet to the 10” RUSS.

   a. Over steel roof decks

      Position “fingers” of 10” TPO RUSS below the membrane along the center of each field sheet where the field membrane sheets **extend perpendicular to the edge of the roof**. The 10” TPO RUSS should extend a distance equal to the perimeter enhancement dimension required by the specifications. Refer to Details MHT-FM-308A, MHT-FM-310A, or MHT-FM-312A.

      CAUTION: 6" wide TPO RUSS is only available with 3” wide tape on one side and therefore cannot be used for perimeter enhancements.

3. Fastening Plates Method

   In lieu of the 10” TPO RUSS securement method, position a row of seam fastening plates on top of the membrane down the center of the 8’, 10’, or 12’ wide field sheets. Secure

plates with appropriate fastener though the membrane and overlay plates with 6” wide Pressure-Sensitive TPO Cover Strip or 6” Reinforced TPO Cover Strip hot air welded to the field membrane. TPO membrane is always fastened with 2.4” Seam Plates and minimum #14 HDP fasteners.

On projects requesting warranties of 20 years or more, the plates and fasteners must be overlaid with 6” Reinforced TPO Cover Strip and hot air welded to the field membrane. Cut Edge Sealant must be applied to all cut edges of the Reinforced TPO Cover Strip.

a. Over steel roof decks

Position “fingers” of Seam Plates and appropriate fasteners on top of the membrane along the center of each field sheet where the field membrane sheets **extend perpendicular to the edge of the roof**. The rows of Seam Plates and appropriate fasteners should extend a distance equal to the perimeter enhancement dimension required by the specifications. Refer to Details MHT-FM-308A, MHT-FM-310A, or MHT-FM-312A

NOTE: Consult Fastener Guidelines (Section 5) for determination of “perimeter” and fastener spacing.

Buildings with special conditions

Air pressurized buildings, canopies and buildings with large openings where the total wall openings exceed 10% of the total wall area on which the openings are located (such as airport hangars, warehouses and large maintenance facilities) will typically require additional perimeter enhancement. Refer to Details MHT-MA-103A or MHT-MA-103B

Field Sheet Membrane

1. Unroll the first full-width sheet membrane. Roll out the full-width Mule-Hide field sheet membrane so that it laps UNDER the perimeter half sheet by 5-1/2 inches. This will produce a 2 to 2-1/2 inch clear lap area for seam welding. Position the butt end of the membrane so that it will be overlapped 5-1/2 in. by the half-sheet that will be installed perpendicular to the field sheets.

   a. On Steel Roof Decks – run the first full width sheet so that the seam is perpendicular to the ribs of the deck. If perimeter half sheets are used, roll out the first full-width sheet so that it laps under the perimeter sheet by 5-1/2 inches on the roof edge that is perpendicular to the ribs of the deck. Run the full-width sheet all the way to the roof edge on the sides that are parallel to the ribs of the deck.

   NOTE: All field seams shall be shingled with the flow of water.

2. Allow the membrane to relax at least 15 minutes prior to fastening, 30 minutes when the temperature is below 60° F.

3. Fasten the field sheet. TPO membrane is always attached with 2.4” Seam Plates and minimum #14 HDP fasteners. Mechanically fasten both edges and the butt end of the first field sheet (that overlaps a half sheet) into the deck. Take care to avoid making wrinkles. Fasteners must be installed so that the plates are 1/2 in. from the edges and end of field sheet. Space fasteners apart as required for the specific deck type and wind uplift requirements (see Section 4).

4. Install two more field sheets. These and subsequent rolls of field sheet membrane must OVERLAP by 5-1/2 inches (to the scribed lap line) the previous runs of field sheet membrane. Align ends so that they will be overlapped 5-1/2 inches by the perpendicular half-sheet, if used. Mechanically fasten field sheet into the deck along the edge that does not overlap the previous

sheet. Space fasteners apart as indicated for the specific deck type and wind uplift requirements.

5. See Hot Air Welding section on Page 9.

   NOTE: Wherever there is a change in plane greater than 2" per foot, base attachment must be installed. Base attachment can be accomplished by the use of 6" TPO Pressure Sensitive RUSS with Seam Plates and appropriate HD fasteners, Seam Plates and appropriate HD fasteners through the top of the membrane, or A/P Bar and appropriate fasteners. Refer to TPO Standard Details for approved base attachment construction.

   NOTE: Pay special attention to the "T" lap seams formed where the perpendicular half-sheet overlaps the butt ends of the field sheets and at the end laps of the field sheets. To ensure proper seaming of the "T" joints for 45 mil membrane with warranty lengths not exceeding 15 years, the top layer of the Heat-Weld Membrane is creased a minimum of one inch into the lower layer of membrane by using a heat gun with a narrow or pencil tip nozzle and a rubber hand roller. By inserting a heat gun nozzle between the layers of the membrane, the membrane will soften and begin to flow allowing it to crease and seal completely after applying pressure with a hand roller to ensure adequate bonding of the softened material. On all 60 mil and 80 mil membranes and on projects requesting warranties exceeding 15 years, a separate "T" patch constructed of non-reinforced membrane is heat welded d directly over the "T" joint.

Fully Adhered Systems

Perimeter Half Sheets are NOT required in a Fully Adhered System. However, increased insulation fastening densities are required in the perimeters and the corners to compensate for the increased wind forces in these areas. Mule-Hide requires the following additional insulation attachment provisions:

Perimeters – insulation attachment to be increased 50% over the field attachment requirements with a maximum of one (1) fastener every one (1) square feet.

Corners – insulation attachment to be increased 50% over the field attachment requirements with a maximum of one (1) fastener every one (1) square feet.

Mule-Hide defines the perimeter and corner width as a minimum of eight (8) feet. See Details MHT-UN-108A and MHT-UN-108B

To ensure that your installation meets the Mule-Hide specifications, refer to TPO Standard Details as you read this section.

CAUTION: Keep the protective packaging of the Mule-Hide Heat-Weld Membrane intact until ready to use.

Position membrane over substrate with a minimum 3" overlap at lap seams, and positioned so that laps will shed water. Allow the membrane to relax at least 15 minutes prior to adhering, 30 minutes when temperatures are below 60° F. After membrane has relaxed, fold membrane in half lengthwise exposing the underside of the sheet. Pails of adhesive are often used to weight the back edge of the membrane to hold it in position.

Using a medium nap roller, apply a smooth even coat of bonding adhesive to back side of membrane and substrate. Coverage rate should be 120 square feet per gallon per side for an installed coverage rate of 60 square feet per gallon. **Do not apply adhesive in area of seam laps.** Allow adhesive to dry to a 'tacky' state. Test adhesive by placing a knuckle into it and turning your wrist a one-quarter turn. Adhesive is ready to mate when it does not string when knuckle is lifted.

Roll coated membrane onto substrate being careful to not wrinkle the sheet or trap air bubbles. Once the membrane is mated to the substrate, thoroughly broom into place with a stiff bristled push broom

to ensure proper contact and 100% adhesion. Repeat this procedure for remaining sheets.

See Hot Air Welding section on Page 9.

NOTE: Wherever there is a change in plane greater than 2" per foot, base attachment must be installed. Base attachment can be accomplished by the use of 6" TPO Pressure Sensitive RUSS with Seam Plates and appropriate HD fasteners, Seam Plates and appropriate HD fasteners through the top of the membrane, or A/P Bar and appropriate fasteners. Refer to TPO Standard Details for approved base attachment construction.

NOTE: Pay special attention to the "T" lap seams at the butt ends of the field sheets. To ensure proper seaming of the "T" joints for 45 mil membrane with warranty lengths not exceeding 15 years, the top layer of the Heat-Weld Membrane is creased a minimum of one inch into the lower layer of membrane by using a heat gun with a narrow or pencil tip nozzle and a rubber hand roller. By inserting a heat gun nozzle between the layers of the membrane, the membrane will soften and begin to flow allowing it to crease and seal completely after applying pressure with a hand roller to ensure adequate bonding of the softened material. On all 60 mil and 80 mil membranes and on projects requesting warranties exceeding 15 years, a separate "T" patch constructed of non-reinforced membrane is heat welded directly over the "T" joint.

FLASHING DETAILS

While many roofing jobs are likely to have their own special problems, the contractor is just as likely to face certain rooftop features over and over again. This section explains how to accommodate these common roof features quickly and effectively, time after time with the Mule-Hide TPO Membrane Roofing Systems.

In general, when dealing with common roof features (curbs, vents, etc.) complete the pertinent details per Mule-Hide TPO Standard Details. When approaching such features, cut and fit the membrane around each obstacle you encounter. All membrane flashings shall be installed concurrently with the roofing membrane as the job progresses. Install night seals as necessary at the end of each workday. Should any water penetrate the new roofing because of incomplete flashings, the affected areas shall be removed and replaced. In reroofing, maintain the ability of the existing roof to drain - don't block off drains or scuppers.

Base Attachment

Wherever there is a change in plane greater than 2" per foot, base attachment must be installed. Base attachment can be accomplished by the use of 6" TPO Pressure Sensitive RUSS with Seam Plates and appropriate HD fasteners, Seam Plates and appropriate HD fasteners through the top of the membrane, or A/P Bar and appropriate fasteners. 6" RUSS is always fastened with 2.4" Seam Plates a minimum #14 HDP fasteners. Refer to TPO Standard Details for approved base attachment construction.

Standard Details

IMPORTANT: All roofing detail work must follow Mule-Hide TPO Standard Details. Any failure to complete details to Mule-Hide specifications can stand between you and a favorable inspection - and therefore, a Warranty. Consult Mule-Hide Technical Service department if you have any questions about how to solve special roofing problems using the Mule-Hide system, or about the Mule-Hide TPO Standard Details.

Curbs, Vents, and Roof-to-Wall Flashings

Install approved base attachment required around these penetrations. Cut flashing membrane using the Mule-Hide Reinforced TPO Membrane as required. All TPO Membrane flashings shall be fully

adhered using an approved Mule-Hide bonding adhesive. The following conditions must be met:

1. All existing flashing materials must be removed down to the substrate or covered with a suitable material. All surfaces to be fully adhered should be compatible, dry and smooth with no excessive surface roughness.

2. After the proper surface has been prepared, the approved Mule-Hide bonding adhesive shall be applied to both the back of the membrane and the substrate using a minimum 1/2 inch nap paint roller at a rate of approximately 1 gallon per 120 square feet of surface area depending on the type of substrate. Installed coverage rate will be 60 square feet per gallon. Apply adhesive in smooth even coat, avoiding globs, puddles, or other types of irregularities.

   Let adhesive dry sufficiently to produce strings when touched with a dry, clean finger. Mule-Hide TPO Membranes used as flashing shall be cut to a workable length and shall have an even coating of bonding adhesive applied to it at a rate of approximately 1 gallon per 120 square feet. Installed coverage rate will be 60 square feet per gallon. Carefully roll onto the previously coated substrate after the adhesive coating on the membrane has dried sufficiently as indicated above. **Coverage rates will vary depending on substrate and environmental conditions.**

Avoid wrinkling membrane when applying to substrate. The amount of adhesive that can be successfully applied to the membrane will vary depending on ambient temperatures, humidity and manpower. After mating membrane to the substrate, carefully roll the membrane with a 2-inch wide rubber hand roller to promote maximum positive contact between the membrane and the substrate. Overlap all adjacent flashing sheets a minimum of 2 inches. The TPO Membrane Flashings shall extend a minimum of 6 inches onto the field sheet to allow the use of the automatic welder on the flashing seams. There shall be a minimum 2 inches hot-air weld in front of any fastener plates used on top of the membrane.

Areas of the flashings and membrane to be welded are not to have bonding adhesive applied to them.

All flashings shall extend a minimum of 8 inches above roof membrane level unless previously accepted by the Mule-Hide Technical Department. All flashings shall be hot air welded at their connections with the roofing membrane. Apply Cut Edge Sealant at all welded edges of reinforced flashings. All flashings shall be properly terminated according to Mule-Hide's published TPO Standard Details.

Roof Drains

Install roof drains according to the TPO Standard Details. Field seams must not run through drains. If seams are located within 24 inches of a roof drain, a minimum 36" x 36" target patch must be installed. In reroofing, old drains must be "**thoroughly cleaned**" or replaced. Existing sealing materials must be completely removed to avoid contamination and interference with the new membrane seal and with consistent clamping pressure. Insure that drain bolts and clamping ring are in good condition. Replace missing or broken parts as required, including screens. Missing drain bolts will not be allowed.

Metal Work

Install metalwork in a manner that prevents damage from expansion or contraction and from the wind. Seal and waterproof all metalwork in an acceptable manner. Note that metalwork other than Mule-Hide Coated Metal and Mule-Hide Metal Accessories supplied by Mule-Hide are not covered by Mule-Hide Warranty.

HOT AIR WELDING OF SEAMS

To qualify for a labor and material warranty, Mule-Hide requires that all seams be welded using an automatic welder, when it is practical for the automatic welder to be used. Some examples where using an automatic welder is impractical would be:

- Highly sloped surfaces
- Severely congested roof areas where there are limited open runs down the seams
- Small roofing details

The use of an automatic welder provides a consistent 1-½" to 2" wide solid weld at the seams. Take care to avoid wrinkles. Refer to the next section of TPO System Guidelines entitled Equipment Needed to Install Mule-Hide Heat-Weld Membranes for detailed information on heat welding.

Probing Seams

Probe all seams and repair all deficient seams no later than the following workday. **FAULTY SEAMS HAVE BEEN THE SINGLE MOST COMMON DEFICIENCY NOTED BY MULE-HIDE INSPECTORS.** Make it a routine to probe seams each workday, and to repair all seam deficiencies with the hand welder before leaving the work site.

The probing of seams should not be done until the hot-air welds have thoroughly cooled. As a general procedure, seam probing and repair of deficiencies should be done for all seams approximately 8 hours after they are initially welded.

WARNING: Premature probing can open or damage warm seams that would have been perfectly acceptable once they had cooled.

1. Draw probing tool tip along seams. Gripping the probing tool by its handle, draw its tip along the edge of the hot-air welded seam. Apply firm pressure into the seam junction - not into the bottom sheet. The tool should not penetrate into the lap area.

2. Mark deficiencies. Using a water-soluble marker, mark off the beginning and end of voids.

3. Repair deficiencies promptly. Using a hand-held welder, repair all seam deficiencies as quickly as possible. It is required by Mule-Hide that repairs be made the same day that they are discovered.

4. Check repairs. After the repaired seams have cooled completely, probe them again. If the repair is successful, wipe off the water-soluble marker line; if not, do the repair over.

Voids and Wrinkles in Seams - General

Unprobed, defective seams are the most common problem found by Mule-Hide inspectors. If defective seams are found by the Inspector on your job, they are likely to delay the issuance of a Mule-Hide Warranty. Therefore, it is in your best interest and good roofing practice to thoroughly check your seams to ensure they are acceptable to Mule-Hide BEFORE the final inspection occurs.

Probe all seams daily. Be sure to probe ALL new seams approximately 8 hours after completion or at the beginning of the next workday. Mark all voids and other defects for repair with a water-soluble marker. All seam welds must be at least 1-½ to 2" inches wide and free of voids. Seams that do not meet these specifications are not acceptable to Mule-Hide.

Defective seams must be repaired the same day as found. All voids and otherwise defective seams must be repaired by hot-air welding with a Mule-Hide approved hand-held hot-air welder the same day as probed.

NOTE: Seams do not deteriorate over a few days' or weeks' time when properly welded. When an inspector finds voids, the contractor could have found the problem with effective probing during the installation.

Repairing Voids and Wrinkles

Voids. The presence of voids generally indicates that not enough heat is being applied to the membrane, and therefore the movement of the welding machine should be slowed down. It may also be possible that you are trying to weld membrane that is dirty or wet. Follow this procedure to clean dirty TPO:

Clean the surface to be welded. Clean the surfaces of both sheets to be welded thoroughly with Fantastik® or other similar general cleaner. Rinse clear and let dry. Surfaces must be cleaned until they are white. Make a final pass over the cleaned area with a clean rag dampened with Mule-Hide Weathered Membrane Cleaner.

Wrinkles. The presence of wrinkles in seams indicates the possibility of voids and a weak seam. Wrinkles may form if the hot-air welding machine drags the membrane at an angle to the seam. Such dragging can be caused by a machine that is out of alignment, by the welding of seams along, up, or down too great a slope, or by the improper unrolling of the membrane so that it does not lie flat and/or parallel to the seam direction.

Wrinkles and other distortions may also occur in hand welding operations because of inconsistent hand-rolling and welder movement. The operator should strive for smooth, consistent progress. Use a low enough heat setting to permit smooth work, especially with non-reinforced sheet.

Hand welding for field seams may be necessary on steep slopes, although some contractors find that the hot-air welder machine can be "held back" by the operator (possible with a helper) when welding DOWN slopes. This practice increases the difficulty of "staying on course," and is not recommended for the novice operator.

SPECIAL PROBLEMS

Many roofing jobs are likely to have some special problems. This section explains how to accommodate some of these problems quickly and effectively with the Mule-Hide Roofing System.

Repairing Punctures and Holes in Membranes

Occasionally, punctures and holes may occur in the Mule-Hide TPO Membrane. Punctures and holes are frequently the result of other trades working on the roof, which should be kept to a minimum by the building owner/manager or project general contractor.

To repair punctures and holes in the TPO Membrane, follow this procedure for hand welding a patch:

1. Clean the surface to be patched. Clean an area a minimum of 4 inches in all directions around the puncture or hole thoroughly with Fantastik® or other similar general cleaner. Rinse thoroughly. Wipe with clean, damp rags and dry well. Surface must be cleaned until it is white.

2. Wipe the cleaned area of the field sheet membrane with Mule-Hide Weathered Membrane Cleaner, following all directions and precautions on the label. Final cleaning with the Mule-Hide Weathered Membrane Cleaner will help ensure the removal of any remaining dirt or soap film.

3. Cut out patch. Cut a round or rectangular patch with rounded corners from reinforced field sheet membrane. The patch must be 3 inches larger in all directions than the puncture or hole.

   NOTE: All patches must be cut from scrim-reinforced membrane.

4. Position patch over the puncture or hole. Take care to allow for even laps on all sides.

5. Hot-air weld the patch. Using the hand-held hot-air welder and hand roller, hot-air weld the patch over the puncture or hole.

6. Probe the edges of the patch after it has cooled sufficiently.

7. Seal all edges of the patch with Mule-Hide Cut Edge Sealant.

Making a Temporary Tie-In

While the roofing job is underway, it is vital to keep insulation, roofing board, and/or other substrates and the deck dry. Moisture that is present under the Mule-Hide TPO Membrane will have a difficult time escaping once the membrane is hot-air welded.

Therefore, a “night seal,” or temporary waterstop, should be applied whenever storms threaten and at the end of every workday. The time needed to apply a night seal is well invested. The resulting protection can prevent the need for costly and time-consuming tear-off of wet substrate materials!

IMPORTANT! The membrane used to make a night seal must be trimmed back prior to work.

Temporary Sealing of a Penetration

From time to time, at the end of a workday or before a storm breaks, it may be necessary to seal penetrations temporarily. Follow this procedure:

1. DO NOT make finished cuts at this time. A surplus of membrane will ensure that the next steps do not compromise the eventual, final completion of the penetration detail.

2. Turn membrane up on curb or equipment a minimum of 2 inches.

3. Install duct tape. Tape should be a minimum of 4 inches wide. Make sure you have a good bond between the tape and the curb. Tape should always be used in a manner that does not rely strictly on the tape adhesive to stay in place; e.g. ballast, wrap, or tack in place.

4. Before permanent seaming and adhesive bonding, trim membrane that is contaminated with tape adhesive. Remember, adhesive from the duct tape will prevent successful hot-air welding and good bonding with Mule-Hide bonding adhesive.

WARNING: Duct tape is not a suitable means for permanent sealing of seams in the Mule-Hide TPO Membrane System. Only hot-air welding is an acceptable means of seaming.

ROOF WALKWAYS

A walkway must be provided to accommodate regular traffic to service rooftop units. You can use smooth surface paver blocks over a slip sheet, or use our Mule-Hide TPO Walkway Rolls.

End of Section

Mule-Hide Products Co., Inc.
Equipment Needed to Install Mule-Hide Heat-Weld Membranes

Introduction - This section is intended to serve as a general guideline of the equipment that the contractor may need to successfully install a Mule-Hide Heat-Weld Membrane Roofing System.

General - The following list of hand tools should be included for an average crew of 4 to 6 men:

- One automatic welder
- Asphalt-free extension cord (#10/3 wire, 220 volt) with 220/30 amp male-female twist lock plugs for use with the automatic welder, not to exceed 100 feet in length
- 2 or 3 hand welders with nozzles
- Asphalt-free extension cords (#14/3 wire, 110 volts)
- 3 or 4 rubber hand rollers
- 1 pair of scissors per man
- 3 standard screw guns with disengaging clutch (RPM range of 1800-2500 with adjustable nose piece)
- Tape measures and one 100-foot tape
- 2 or 3 cotter pin extractors for probing seams
- Non-permanent ink pens (water soluble)
- Chalk lines with non permanent chalk (blue chalk)
- 4-inch wide paint brushes
- One-half inch nap paint rollers with solvent-resistant cores and handles
- Clean cotton rags
- Caulking guns
- Push Brooms
- Asphalt free waterproof canvas or other type of waterproof tarp for covering Mule-Hide products and equipment

Specialized Equipment - The Mule-Hide Roofing System requires 4 types of specialized equipment:

- Mule-Hide-approved automatic hot air seaming machine
- Mule-Hide-approved hand-held seaming machine
- Generator large enough to provide power to automatic welder and hand gun(s)
- Cotter pin puller or other type of pointed instrument to probe seams

WARNING: Never touch the metal portion of the fan housing, blower tube or blower nozzle of the automatic welder or hand held heat guns. They become extremely hot and can cause severe burns.

The Mule-Hide Heat-Weld Membranes can be permanently fused to itself by the application of super-heated air and pressure. To provide the required heat and pressure, Mule-Hide Heat-Weld Membrane Roofing Systems specifies an automatic welder for making field seams. A hand welder is specified when an automatic welder cannot be used (see next Section).

Automatic Welder

General Description: An automatic welder is an electrically powered, self-propelled device that utilizes electrical resistance heating and fan-forced hot air in combination with its own weight (including additional weight mounted on the exterior housing) to fuse the Mule-Hide Heat-Weld Membranes to themselves.

Technical Specifications

The following specifications are for general information. Consult the manual accompanying the equipment for additional details.

- **Electrical requirements:** 220V, 30A (minimum fused), 7500 W (minimum recommended available power), single-phase current. If using a generator, ensure generator is of sufficient size to power all welding tools (hand gun(s), automatic welder) run from generator.

- **Power cord and extensions:** #10, 3-conductor type may be used for distances up to 100 ft.; for longer lengths, consult an electrical contractor. We suggest the use of the highest quality electrical cords to extend the life of your equipment and improve overall performance.

- **Supplemental weight:** When welding Mule-Hide field membrane, an additional weight is to be fixed on the exterior housing over the wheels of the automatic welder. Most automatic welders have removable external weights.

- **Adjustments:** Tracking alignment, nozzle alignment, forward speed, temperature of heating element and airflow louver (and therefore hot air output).

- **Welding speed:** The speed of the welder must be no faster than necessary to reproduce good hot air weld and will vary according to environmental conditions. As a general rule, 10 to 12 feet per minute (fpm) is a typical speed in warm summer temperatures; 8 fpm or less is typical in cold weather temperatures.

- **Metal track (if required by welder manufacturer):** Several lengths, 8 foot each of 24-26 gauge galvanized metal for use as a track for the automatic welder. The metal tracks may be necessary to minimize wrinkles during welding.

NOTE: Conditions seldom justify running at maximums speed, which usually result in inconsistent seam quality. As ambient temperatures change throughout the day, the operator must rely on his judgment to determine the optimum operating speed and temperature of the automatic welder. It is good roofing practice to conduct test seaming before welding the field seams. See page 4 for test welding instructions.

Procedure - Before Connecting to Power

Use the automatic hot-air welder to make all field seams as general practice; the nozzle can be adjusted to weld near-horizontal seams (typical field seams). .

Be sure to take the following preliminary steps when using an automatic unit.

1. Supplemental weight. Fix the supplemental weight to the exterior housing over the wheels. This weight will ensure that the proper pressure is applied to the seam being welded.

2. Check hot-air nozzle alignment and adjust if required.

3. Welding and non-welding positions. The hot-air nozzle can be locked into an UPWARD non-welding position, or into its DOWNWARD welding positions. The nozzle and blower assembly can be freely raised from the welding position after the release trigger on the blower housing is pulled and the entire assembly is slid OUTWARD from the machine. In this OUTWARD position, the nozzle and blower assembly escapes the detent that locks it into the DOWN position, and can be rotated to the UP position, where it will lock when the trigger is released. Position the hot-air nozzle so that it is in its DOWNWARD welding position and visually check to ensure that the nozzle will not direct the hot air into the silicone drive wheel or belt. Such misdirected super-heated air can quickly ruin the expensive wheel or belt drive. Any misalignment of the nozzle should be corrected at this time. After ensuring that the nozzle is properly aligned, return the hot-air nozzle to its UPWARD, non-welding position.

Be sure that the blower and transmission power switches are OFF and that the blower temperature control and speed control are set to ZERO.

CHECKPOINT: At this point, it is assumed that you are ready to hot-air weld a field seam, and the following requirements have been met:

- A roll of Mule-Hide Heat-Weld Membrane has been attached to the roof deck, and a second roll has been unrolled to provide a 5-1/2-inch overlap for mechanically attached and a 3” overlap for fully adhered over the previously attached edge, per Standard Mule-Hide Specifications.

- The surfaces to be hot-air welded are clean. If these surfaces are dirty, they must be rag-wiped clean with Fantastik® (or similar cleaner), then wiped with a clean rinse rag and thoroughly dried. The seam area should then be wiped with a clean rag dampened with Mule-Hide Membrane Cleaner to ensure removal of any remaining dirt or soap film.

- With the nozzle and blower assembly in the UP position, the automatic welder is positioned so that the silicone pressure wheel or belt is placed at the edge of overlapping sheet and the beveled guide wheel in front is at the edge of the top Mule-Hide sheet.

- Transmission and blower switches are OFF and speed and heat controls are set to ZERO.

WARNING: Never touch the metal portion of the fan housing blower tube, or blower nozzle. They become extremely hot and can cause severe burns.

Procedure - Connecting to Power

With the preliminaries done, you are ready to hot-air weld.

4. Connect the machine to power.

5. Turn the heater/blower power switch ON.

6. Set the temperature switch to the desired setting (1004º F is a good starting point).

7. Allow the machine to warm up (generally around 5 minutes).

NOTE: Test seams should be made at least at the start of work each morning and afternoon or any

other time there is a noticeable change in temperature. Test seams should be made on use scrap material. After scrap material has cooled, attempt to physically tear them apart and examine them for consistent 1-1/2 to 2 inch wide fully laminated seam.

8. Prepare to set the machine in motion.

   - If ambient temperature is higher than 60 degrees F, adjust the transmission speed control switch so that the machine will move at about 12 fpm; further adjustment may be required once you are underway, depending on the quality of the seam produced.

   - If ambient temperature is 40-60 degrees F, adjust the machine to move at about 10 fpm; further adjustment may be required, depending on the quality of the seam produced.

   - If ambient temperature is less that 40 degrees F, adjust the machine to move at less than 8 fpm; the best rate will have to be determined based on the quality of the seam produced. As a general rule, the colder the ambient temperature - and, hence, the membrane - the more slowly the automatic welder will have to proceed in order to produce good seams.

   NOTE: As there are no ideal working conditions and ambient temperatures change throughout the day, the operator must rely solely on his own judgment to determine the operating speed of the automatic welder.

   CAUTION: the operator of the welding equipment should be absolutely sure that the machine is positioned properly to begin welding before proceeding to the next step. Remember that the guide handle points IN THE DIRECTION THAT THE MACHINE WILL MOVE.

9. Separate the overlapping sheets. Place one hand palm-down on the blower housing, and put your index finger on the release trigger. With your other hand, use a seam probe (or similar tool) to separate the two overlapping Mule-Hide Heat-Weld Membranes so that the nozzle can be slid between them.

10. Insert the blower nozzle between the sheets. Pull the trigger, and position the nozzle between the membrane sheets, locking it in its DOWN welding position. Immediately proceed to the next step to prevent burning the membrane!

11. Start the machine moving. Quickly turn the transmission switch ON. NOTE: Some machines start automatically. The machine will start moving and welding the seam. Mark the start of the seam with a water-soluble marker.

12. Stay on course. As the automatic welder proceeds, keep the small guide wheel at the front of the machine at the edge of the top sheet. Steer the machine from the front to minimize zigzagging, which is likely to result from steering from the rear. If you go off-course, simply get back on course quickly. Seam deficiencies will be repaired later, with the hand welder.

    IMPORTANT: Keep plenty of slack in the power cord. Any drag can pull the machine off-course.

13. Adjust to the speed that produces the best weld. The guidelines set in Step 8 provide good starting points. As welding proceeds, some trial-and-error adjustments will be required. Generally, adjusting the speed will be the most effective means of “dialing in” the best seam production. When the ambient temperature is very high, it may be necessary to turn the temperature down.

Rules-of-Thumb for Judging Seam Quality

- The seamed membrane is not discolored: Increase speed if membrane discolors (yellow/brown). If ambient temperature is very high and membrane discolors even when

speed is at maximum, turn down the temperature control.

- Bubbling. If welder setup is marginally too hot, the seam surface may exhibit a slight bubbling appearance.

- Voids and wrinkles. A good seam has no voids or wrinkles and is 2 inches wide with the exposed edge tight. If not, see “Repairing Voids and Wrinkles,” and “Repairing Holes in Membranes.”

- Seam strength may be tested when cool. For best results, testing seams 8 hours after hot-air welding is recommended.

14. Completing a welding run. At the end of a run, lock the nozzle in its UP, non-welding position and turn the transmission switch OFF to stop the machine’s movement. NOTE: some machines stop automatically when the nozzle is taken out of the seam. Mark the end of the seam with a water-soluble marker.

15. Clean the nozzle frequently. The nozzle should be wire-brushed frequently to remove hot particles of the Mule-Hide Heat-Weld compound. (Some applicators wire-brush after each welding run.) If not removed, such particles are likely to be deposited by the nozzle, forming brown streaks at the edge of the lap; more than aesthetics is at stake - the presence of such particles in the seam can affect seam integrity.

16. Cool the welder down. At the completion of a period of welding - for example, at lunchtime or quitting time - with the nozzle locked in its UPWARD position, turn the temperature adjustment dial to its lowest setting. The heating element will shut off, but the blower will continue to operate, cooling the heating element. After about five minutes, turn the power switch OFF. NOTE: some machines will shut down automatically after pushing only one button.

Precautions

As with any high power electrical equipment used outdoors, use accepted practice and common sense to avoid injury. Some suggestions:

- Do not operate any heat welder during storms.

- Use extreme caution to avoid burns. The temperature of the super-heated air in this machine can reach approximately 1200 degrees F (645 degrees C).

- Guard against snagging the power cord.

- If the power cord should become disconnected while the machine is operating, it is desirable to reconnect as quickly as possible, with careful attention to safety, to avoid possible damage from overheating. Switch the machine OFF to avoid arcing when reconnecting to power. Reconnect to power. Turn the power switch ON to resume normal operation.

- Inspect the power cord and connections before each welding session. Repair or replace worn or frayed cords and connectors promptly.

- Although the unit may be a double-insulated design, a ground fault interrupter (G.F.I.) at the power source is still recommended.

NOTICE: This equipment is for industrial use only. These instructions are for general information only. Prior to actual operation of the hot-air welding equipment, refer to the operating instructions that are provided by the manufacturer. Because the handling and use of this equipment is beyond Mule-Hide's control, we will not accept any liability for the results obtained.

All statements herein are expressions of opinion, which by performance and testing are believed to be accurate and reliable, and are presented without any knowledge that such recommended uses may infringe any patent. No warranty of any kind whatsoever, expressed or implied, is made or intended.

Hand Welder

General Description: The hand-held hot-air welder is an electrical powered, hand-held device that utilizes electrical resistance heating and fan-forced super-heated air to heat Mule-Hide Heat-Weld Membranes. A hand-held rubber roller is used in conjunction with the welder to apply the pressure that fuses the heated Mule-Hide Heat-Weld Membrane surfaces to each other.

The hand-Held welder is used as general practice to touch up imperfect seams. It is also used when the self-propelled automatic model is inappropriate, such as in roofing details and on highly sloped surfaces.

Technical Specifications:

- **Electrical requirements:** 115V, 15A (minimum fused), 2,500 W (minimum recommended available power), single-phase current. If using a generator, ensure generator is capable of providing adequate wattage for using the automatic welder and hand gun(s) at the same time.
- **Power cord and extensions:** #12, 3-conductor type may be used for distances up to 100 ft.
- **Adjustments:** Temperature of heating element and air flow louvers (and therefore hot air output).
- **Accessories:** 3/4-in. (20-mm) nozzle (for welding details), 1-1/2-in. (40-mm) nozzle (for straight welding, as when repairing field seams), hand-held silicone rubber roller.
- **Welding speed:** Speed will vary according to ambient weather conditions, element control settings, and user proficiency.

Procedure - Before Connecting to Power

Use the hand-held hot-air welder to repair and/or make all seams that cannot be made by the automatic welders. Be sure to take the following preliminary steps before plugging in the equipment:

1. Fit the appropriate nozzle. In general, the 1-1/2-in. (40 mm) nozzle should be fitted to the welder when making or repairing straight welds; the 3/4-in. (20 mm) nozzle should be fitted when welding flashing details.
2. Be sure the power is OFF and the heat adjustment switch is set to ZERO.

   CHECKPOINT: At this point, it is assumed that you are ready to hot-air weld a seam, and the following requirements have been met:

   - All fasteners are in place and the two surfaces to be welded are in position.
   - The surfaces to be hot-air welded are clean, free of adhesive (a potential problem with flashing details) and other contaminants. If these surfaces are dirty or contaminated, they must be rag-wiped clean with Fantastik® or similar general cleaner, then wiped with a

clean rinse rag and dried thoroughly. The seam area should then be wiped with a clean rag dampened with Mule-Hide Membrane Cleaner to ensure removal of any remaining dirt or soap film.

- During its warm-up period, hot air from the welder should be directed in a safe direction.
- A rubber hand roller is available.

WARNING: Never touch the metal portion of the fan housing, blower tube, or blower nozzle. They become extremely hot and can cause severe burns.

Procedure - Connecting to Power

With the preliminaries done, you are ready to hot-air weld.

1. Connect the machine to power. Ensure that the welder is pointed in a safe, unobstructed direction.
2. Switch the power on. Turn the power switch ON and turn the heat adjustment switch to its highest position.
3. Warm-up the welder for 5 minutes.

NOTE: When first starting out or when welding confined work areas such as corners and pipe penetrations, it is advisable to turn the heat setting down a few notches to avoid applying heat faster than you can work effectively.

4. Insert the nozzle into the lap approximately 2” back from the edge of the membrane to create an air dam. Position the nozzle between the surfaces to be welded and quickly position the hand roller on the outer membrane about 1/8 to 1/4 in. from the end of the nozzle.

NOTE: More heat is needed when beginning a weld than after a weld is underway, because the membrane is cool. In addition, the super-heated air has an easy escape before a seam is formed. As welding proceeds, the membrane warms up and the hot air from the welder is partially trapped by the seam. Be prepared to pick up the pace as you proceed.

5. Roll the seam. When the membrane becomes softened, apply a firm pressure to the roller and roll it across the seam in strokes about 3 in. long.
6. After finishing the first pass down the seam to create the air dam, repeat the process to complete the seam. When making the final pass down the seam, keep a small (1/8”) portion of the tip exposed beyond the edge of the membrane to ensure a complete weld all the way across the seam.
7. Adjust seaming speed to produce the best weld. As the seaming continues, some trial-and-error adjustment of seaming speed will be required. The membrane surfaces must be heated sufficiently to permit the roller pressure to fuse them together, yet the membrane must not be overheated.

Rules-of-Thumb for Judging Seam Quality

- The seamed membrane is not discolored: Increase seaming speed if membrane discolors (yellow-brown).
- Bubbles and thinning: Overheating the membrane causes small bubbles and overstretching to the point of leaving too little sheet thickness, especially when working with unreinforced

material. Another sign of overheating is a darkened “smeared” appearance on the seam.

- Voids and wrinkles. A good seam has no voids or wrinkles. If voids or wrinkles are present, see “Repairing Voids and Wrinkles.”

8. Clean the nozzle frequently. As with the automatic welding machine, the nozzle of the hand welder should be wire-brushed frequently to remove hot particles of the Mule-Hide Heat-Weld compound that may adhere to it. If not removed, such particles are likely to be deposited by the nozzle; the presence of such burned particles in the seam can affect seam integrity.

9. Cool the welder down. When the welder is to be shut down at the completion of a period of welding - turn the temperature adjustment dial to its lowest setting. The heating element will shut off, but the blower will continue to operate, cooling the heating element. Set the welder down so that hot air from the welder is pointed in a safe direction. After about five minutes, turn the power switch OFF.

Precautions

As with any high power electrical equipment used outdoors, use accepted practice and common sense to avoid injury. Some suggestions:

- Do not operate any heat welding equipment during storms.
- Use extreme caution to avoid burns. The temperature of the super-heated air in this machine can reach approximately 800 degrees F (427 degrees C).
- Guard against snagging the power cord.
- If the power cord should become disconnected while the machine is operating, it is desirable to reconnect as quickly as possible, with careful attention to safety, to avoid possible damage from overheating. Switch the machine OFF to avoid arcing when reconnecting to power. Reconnect to power. Turn the power switch ON to resume normal operation.
- Inspect the power cord and connections before each welding session. Repair or replace worn or frayed cords and connectors promptly.
- Use of a ground fault interrupter (G.F.I.) at the power source is recommended.

NOTICE: This equipment is for industrial use only. These instructions are for general information only. Prior to actual operation of the hand-held welding equipment, refer to the operating instructions that are provided by the manufacturer. Because the handling and use of this equipment is beyond Mule-Hide’s control, we will not accept any liability for the results obtained.

All statements herein are expressions of opinion, which by performance and testing are believed to be accurate and reliable, and are presented without any knowledge that such recommended uses may infringe any patent. No warranty of any kind whatsoever, expressed or implied, is made or intended.

Seam Probing

General Description: the probing of hot-air welded seams is an important step in the application of a Mule-Hide roof, and is your best insurance for successful inspection. **SEAMS WITH VOIDS AND WRINKLES HAVE BEEN THE MOST COMMON DEFECTS CITED BY MULE-HIDE INSPECTORS OVER THE YEARS.**

To ensure consistently high-quality seaming on your job, be sure that ALL seams are probed with an appropriate seam probing tool each work day, and all deficiencies noted/marked with a water-soluble

marker and repaired as promptly as possible with a hand-held hot-air welder. Mule-Hide recommends that you probe seams with a cotter pin puller.

Procedure for Probing the Seams

The probing of seams should not be done until the hot-air welds have thoroughly cooled. As a general procedure, seam probing and repair of deficiencies should be done for all seams approximately 8 hours after they are initially welded.

WARNING: Premature probing can open warm seams that would have been perfectly acceptable once they had cooled.

1. Draw probing tool tip along seams. Gripping the probing tool by its handle, draw its tip along the edge of the hot-air welded seam. Apply firm pressure into the seam junction - not into the bottom sheet. The tool should not penetrate into the lap area.

2. Mark deficiencies. Using a water-soluble marker, mark off the beginning and end of each void.

3. Repair deficiencies promptly. Using a hand-held welder, repair all seam deficiencies as quickly as possible. It is required by Mule-Hide that repairs be made the same day that they are discovered.

4. Check repairs. After the repaired seams have cooled completely, probe them again. If the repair is successful, wipe off the water-soluble marker line; if not, do the repair over.

End of Section

MULE-HIDE PRODUCTS CO., INC.
INSULATION GUIDELINES

1.0 Insulation Guidelines

A. The following is a list of generic insulations acceptable for use with Mule-Hide Roofing Systems. Requests to use other types of insulation boards are to be made to Mule-Hide's Technical Department in writing prior to job bid. Such requests must include the conditions for approval, project name and location of project.

B. Insulation must be no less than 1 inch thick with the exception of high-density wood fiberboard, high density polyisocyanurate, extruded polystyrene and tapered boards. When the insulation is applied directly over a steel deck, in no case shall the minimum allowable thickness be less than that required to span the flutes of a steel deck.

C. Applicable building codes should always be checked prior to proposing the application to Mule-Hide or the building owner.

D. Factory Mutual (FM) and Underwriters Laboratory (UL) assemblies can be found in the Factory Mutual Approval Guide and/or Underwriters Laboratories Building Material Directory and Fire Resistance Directory. Code requirements may dictate the use of specific types and thicknesses of insulation. You can contact the Mule-Hide Technical Department for help in determining which Mule-Hide system may meet your code requirements.

2.0 Insulation

Insulation Type	Used as Overlay Board	Roof Systems		
		Adhered	Ballasted	Mech Attached
Polyisocyanurate - Min 1" thick (top layer) - Min 20 psi	Yes	Yes	Yes	Yes
OSB/Polyisocyanurate Composite - Min 1.5"	Yes	Yes	Yes	Yes
HD Polyisocyanurate Coverboard – Min ½" thick	Yes	Yes	Yes	Yes
HD Fiberboard - Min 1/2" thick [8]	Yes	Yes	Yes	Yes
Dens Deck Prime / Securock - Min 1/4" thick	Yes	Yes	Yes	Yes
OSB - Min 7/16" thick [2]	Yes	Yes	Yes	Yes
Expanded Polystyrene - Min 1" - Type I [3 4 6]	NO	NO [1]	Yes	NO [1]
Expanded Polystyrene w/facer - Min 1" - Type II [3 4 7]	NO	NO [1]	Yes	Yes [5]
Extruded Polystyrene - Min 3/4" thick - Type X [3 4]	NO	NO [1]	Yes	NO [1]
Extruded Polystyrene - Min 1" - Type IV [3 4]	NO	NO [1]	Yes	Yes [5]
Extruded Polystyrene Fan Fold – Min ¼" thick [3 4]	NO	NO [1]	NO	Yes
Protection Mat - Min 6 oz.	NO	NO [1]	Yes	Yes

Notes:
1 - Requires overlay board
2 - OSB must be installed with the rough side up
3 - Not approved over Coal Tar Pitch
4 - Can not be placed in contact with PVC, requires a separation layer
5 - Overlay board recommended
6 - Type I = min 0.90 lb density
7 - Type II = min 1.35 lb density
8 - DO NOT use '6-sided' or asphalt coated board for PVC or water based adhesive

See other requirements listed below.

3.0 Minimum Insulation Specifications

A. Project or Code requirements may dictate use of materials other than those listed below. Contact Mule-Hide Technical Department with questions regarding use insulations in a Mule-Hide Roofing System.

1. Wood fiberboard (High Density)
   Thickness: 1/2" Minimum
   Classification: ASTM C-208, Type 2

2. Polyisocyanurate
   Thickness: 1" Minimum
   Classification: ASTM C 1289,
   Facers: Fiber reinforced facers, both sides

3. High Density Polyisocyanurate
   Thickness: 1/2" Minimum
   Compressive Strength: Min 90 psi at 10% deformation
   Facers: Fiber reinforced facers, both sides

4. Extruded Polystyrene Boards (flat stock)
   Thickness: 3/4" Minimum
   Classification: Type X
   Compressive Strength: Min 15 psi at 10% deformation
   Not for use over Coal Tar Pitch. Applications may require use of higher density material or overlay.

5. Extruded Polystyrene Boards (fan fold)
   Thickness: 1/4" Minimum
   Compressive Strength: Min 15 psi at 10% deformation
   Not for use over Coal Tar Pitch.

6. Expanded Polystyrene Boards
   Thickness: 1" Minimum
   Classification: Type 1
   Compressive Strength: Min 10 psi at 10% deformation
   Not for use over Coal Tar Pitch. Applications may require use of higher density material or overlay.

7. Expanded Polystyrene Boards (fan fold)
   Thickness: 1/2" Minimum
   Classification: Type 1
   Compressive Strength: Min 10 psi at 10% deformation
   Not for use over Coal Tar Pitch. Applications may require use of higher density material or overlay.

8. Perlite is a mineral fiber insulation board that Mule-Hide does not recommend be used in conjunction with the Mule-Hide Roofing Systems. However, should perlite be required to meet building codes, FM, or UL requirements, the perlite **must** be overlaid with an acceptable insulation. **Perlite is not acceptable for use in recover applications.**

9. Fiberglass is not an acceptable insulation for use in Mule-Hide Roofing Systems.

4.0 Insulation Fastening Patterns

A. Insulation that is mechanically attached to the substrate shall use approved Mule-Hide fasteners. Minimum insulation attachment rates shall be as per Mule-Hide's requirements or insulation manufacturer's specifications, whichever is greater. Projects requiring Factory Mutual or other Code approvals may require heavier gauge fasteners or additional fasteners. In no case shall the insulation attachment rate be less than Mule-Hide's requirements.

B. Insulation is always fastened with 3” Galvalume Stress Plates with minimum #12 Drill Point fasteners.

C. Refer to Mule-Hide specifications and details for minimum fastening rates and patterns.

5.0 Other Methods of Insulation Attachment

A. Asphalt - While Mule-Hide may accept (on a job to job basis) attachment of insulation with hot asphalt for use with Mule-Hide systems, asphalt is neither supplied nor manufactured by Mule-Hide; therefore, the attachment of the insulation with asphalt shall not be covered by Mule-Hide's Standard Warranty. However, if a qualified project designer specifies asphalt attachment, the following recommendations are given:

1. Steep asphalt ASTM D312, Type III or IV, shall be specified

2. Asphalt may only be used to attach approved insulations to primed structural concrete decks, properly nailed base sheets or a base layer of mechanically attached, approved insulation. Insulation must be approved by Manufacturer for use with hot asphalt.

3. Maximum insulation board size shall not exceed 4'x 4'. **4'x 8' boards are not permitted.**

4. Expanded or extruded polystyrene insulation shall not be attached with asphalt.

B. Other insulation adhesive products may be an acceptable method of attaching certain insulation boards to approved substrates. As Mule-Hide does not supply or manufacture insulation adhesives, the products must be installed in strict compliance with the requirements published by the manufacturer. Contact the manufacturer for information and recommendations regarding the appropriate use of these products. Mule-Hide must be contacted prior to the use of any such product. The attachment of the insulation is not covered by the Standard Mule-Hide warranty.

C. Mule-Hide Premium warranties require that Mule-Hide give approval of the insulation adhesive prior to bidding. A copy of the Insulation Adhesive Manufacturer's letter of acceptance for the project must be forwarded to Mule-Hide for review and acceptance by Mule-Hide prior to bidding the project.

6.0 Insulation Storage

A. Insulation boards stored or stocked on the job site or roof must be stacked on pallets (or other supports) above the deck or ground.

B. Insulation shall be covered with waterproof tarps to protect insulation from sun and inclement weather. Wet or damaged insulation must not be used in Mule-Hide roofing systems.

C. Insulation should not be stored on the job site for more than thirty (30) days if at all possible.

7.0 Insulation Application - Recommended Practices

A. For mechanically attached systems, install field sheets perpendicular to long dimension of the top layer of insulation. Where possible, boards should run parallel to the direction of the flutes of the deck.

B. Install insulation boards in parallel courses with tightly fitted and staggered joints. Cut all boards accurately to fit neatly around all projections and at all edges. Gaps greater than 1/4" shall be filled. End joints should be staggered a minimum of 6 inches or as approved by insulation manufacturer.

C. Do not use wet or damaged insulation boards. Install no more insulation than can be covered with seamed membrane and watertight details before any precipitation occurs.

D. On steel decks, the ends of the insulation boards shall rest on the top of the flutes and not in suspension over the valleys.

E. When two layers of insulation are used, the second layer must have the joints staggered to the first layer a minimum of 6 inches or as approved by insulation manufacturer. One set of fasteners may be used to secure both layers of insulation unless otherwise required by the insulation board manufacturer or the design professional.

F. In accordance with Mule-Hide specifications, provide proper water cutoffs to completely seal the insulation on a daily basis.

Caution: Do not install over wet, damp or uneven substrates.

Caution: Keep all insulations away from fire, flame and ignition sources during storage and installation.

End Of Section

MULE-HIDE PRODUCTS CO., INC
FASTENER GUIDELINES

Fastener Overview

A. Mule-Hide offers a variety of fasteners and plates to:
- Attach roof insulation
- Attach mechanically fastened roofing membranes
- Secure All Purpose Bar and termination bars

Mule-Hide fasteners must be used to fasten the roof insulation, roof membrane, and All Purpose Bar. On a job-to-job basis, the Mule-Hide Technical Department may accept the use of non-Mule-Hide fasteners and/or insulation adhesives for attachment of Mule-Hide accepted insulation. Any non-Mule-Hide fastener and plate used must be approved by the Mule-Hide Technical Department prior to job start-up. Your local Mule-Hide Territory Manager can advise you of the acceptability of any proposed non-Mule-Hide fastener. The following fastener guidelines apply:

Technical Specifications - Drill Point Fasteners (#12 Insulation fasteners)

A.

Technical Specifications	Minimum Performance
Material	C-1022 Phillips Cold Heading Wire
Thread OD	0.209 to 0.218 diameter
Point	Double Flute Self-Drilling
Corrosion Coating	Cathodic Epoxy Electrocoat
Average Pull-out	600 lbs. - 3/4" plywood
	480 lbs. - 22 gauge steel

Technical Specifications - HDP Fasteners (#14 membrane or insulation fasteners)

A.

Technical Specifications	Minimum Performance
Material	C-1022 Phillips Cold Heading Wire
Thread OD	.233 - .241 diameter
Point	Double Flute Self-Drilling
Corrosion Coating	Cathodic Epoxy Electrocoat
Average Pull-out	710 lbs. - 3/4" plywood
	575 lbs. - 22 gauge steel

Technical Specifications - EHD Fasteners (#15 membrane or insulation fasteners)

A.

Technical Specifications	Minimum Performance
Material	C-1022 Phillips Cold Heading Wire
Thread OD	.275 - .285 diameter
Point	Double Flute Self-Drilling
Corrosion Coating	Cathodic Epoxy Electrocoat
Average Pull-out	810 lbs. - 3/4" plywood
	725 lbs. - 22 gauge steel

Note: Additional information is available on our website at www.mulehide.com

Physical Characteristics - Drill Point & Heavy Duty Fasteners

A. **Drill Point Fasteners** (#12 Insulation fasteners)

Screw Length*	Thread Length*	Pieces / Box*	Weight / Box*
1 5/8	Full	1000	12#
2 1/4	Full	1000	16#
2 7/8	Full	1000	19#
3 1/4	2 7/8	1000	22#
3 3/4	2 7/8	1000	25#
4 1/2	4	1000	29#
5	4	1000	32#
6	4	1000	37#
7	4	500	21#
8	4	500	24#

*Approximate Values - Other sizes available as special order

B. **HDP Fasteners** (#14 membrane or insulation fasteners)

Screw Length*	Thread Length*	Pieces / Box*	Weight / Box*
1 1/2	Full	1000	13#
2	Full	1000	16#
3	2 7/8	1000	24#
4	3 7/8	1000	31#
5	3 7/8	1000	38#
6	3 7/8	1000	44#
7	3 7/8	500	26#
8	3 7/8	500	30#

*Approximate Values - Other sizes available as special order

C. **EHD Fasteners** (#15 membrane or insulation fasteners)

Screw Length*	Thread Length*	Pieces / Box*	Weight / Box*
1 1/4	Full	1000	15#
2	Full	1000	22#
3	2 7/8	1000	29#
4	3 7/8	1000	38#
5	3 7/8	1000	47#
6	3 7/8	500	29#
7	3 7/8	500	33#
8	3 7/8	500	38#

*Approximate Values - Other sizes available as special order

D. Determine minimum screw length per following:

Plywood / OSB Decks:	Fastener length must penetrate deck a minimum of 3/4"
Wood Plank Decks:	Fastener length must embed deck a minimum of 1”
Steel Decks:	Fastener length must penetrate deck a minimum of 3/4"
Structural Concrete Decks:	Fastener length must embed deck a minimum of 1"

Method of Application

A. Install fasteners with variable low speed drill with depth sensing tip, if possible, to prevent over-drill of fastener. Use a #3 Phillips bit to drill fasteners. Structural concrete should be pre-drilled with a hole 1/2" deeper than the fastener to be used using a masonry 3/16" carbide drill bit. **Caution:** Eye protection is recommended during the installation of all fasteners.

General Requirements

A. Plywood decks require a 3/4” penetration through the bottom surface of the deck.

B. Steel decks require 3/4" minimum deck penetration by the fastener. The threaded portion of the fastener must be secured to the deck. Fasteners must engage the top rib of fluted steel decks. Fastening through the bottom rib of a fluted steel deck is not permitted.

C. Structural concrete decks require the fastening of the insulation with fasteners approved by Mule-Hide for use in concrete roof decks and insulation plates. The fastener must penetrate the deck by at least one inch. It is suggested that each hole drilled in a concrete deck be at least 1/2" deeper than the potential penetration of the concrete fastener. The additional 1/2" depth is for the residual filings left by the concrete after the drill has been removed.

D. Gypsum, either poured or precast, cementitious fiber decks (tectum, etc.) and lightweight concrete decks must be secured with Mule-Hide TL Fasteners, Peel Rivets (a registered trademark of Creative Construction Components, Inc.) or an acceptable fastening system approved by Mule-Hide Technical Department.

E. All decks must have a pull-out resistance of 360 pounds minimum. Mule-Hide recommends a test installation be performed to check the pull-out resistance of the appropriate fastener prior to bidding the project. Pull-out tests should be performed by a qualified individual and include different sections of the roof to assure uniformity of the deck.

Approved Fasteners

A. Only approved Mule-Hide fasteners supplied by Mule-Hide Products Co. may be used on warranted Mule-Hide systems. **Caution:** Some fasteners have unusual design characteristics which could harm the membrane if used with the Mule-Hide membrane; therefore, it is recommended that Mule-Hide approved fasteners be used whenever possible.

B. All fasteners shall be corrosion resistant coated and meet the corrosion resistance requirements of Factory Mutual Standard 4470.

C. All fasteners shall be compatible with and suitable for the insulation used and the deck to be penetrated.

Fastener Patterns - Insulation

A. Insulation shall be mechanically attached using approved fasteners per insulation manufacturers' specifications and FM wind uplift requirements. Unless the insulation manufacturer's fastening requirements are more stringent, Mule-Hide requires the following minimum fastening rates and suggests the following patterns:

Mechanically Attached Systems

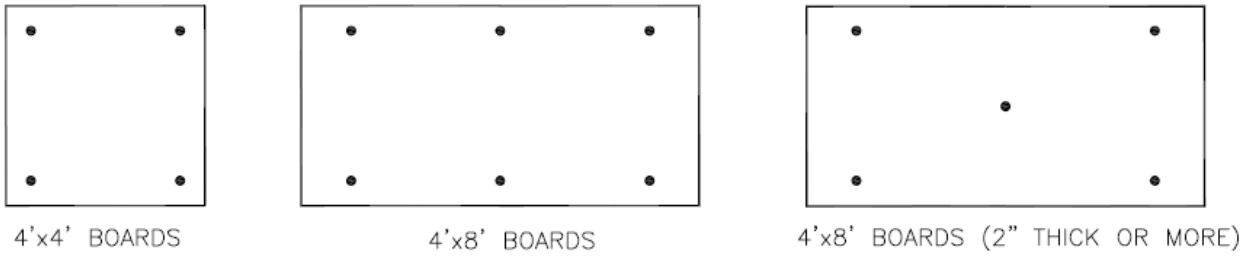

All of the insulation must be pre-fastened to the deck with Mule-Hide #12 DP fasteners and 3" plates at a minimum as shown above. All fasteners must be at least six (6) inches from the edge of the board and

centered as shown.

Fully Adhered

Wood Fiber

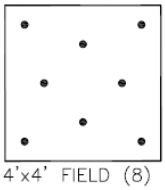
4'x4' FIELD (8)

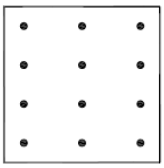
4'x4' PERIMETERS (12)

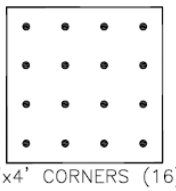
4'x4' CORNERS (16)

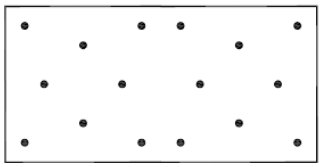
4'x8' FIELD (16)

1 FASTENER PER EVERY 2 SQ. FT.

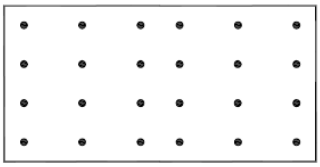
4'x8'PERIMETERS (24)

1 FASTENER PER EVERY 1.33 SQ. FT.

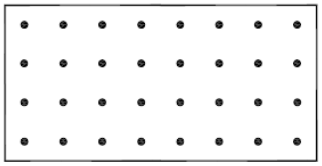
4'x8' CORNERS (32)

1 FASTENER PER EVERY 1 SQ. FT.

Polyisocyanurate Insulation – 1.5" to less than 2" thick

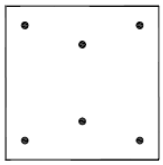
4'x4' FIELD (6)

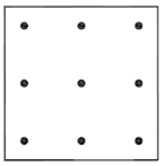
4'x4' PERIMETERS (9)

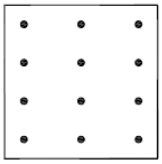
4'x4' CORNERS (12)

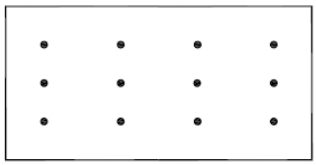
4'x8' FIELD (12)

1 FASTENER PER EVERY 2.66 SQ. FT.

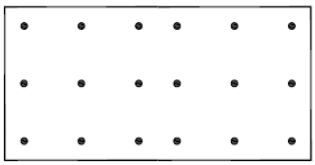
4'x8' PERIMETERS (18)

1 FASTENER PER EVERY 1.77 SQ. FT.

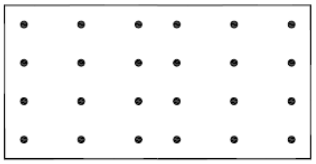
4'x8' CORNERS (24)

1 FASTENER PER EVERY 1.33 SQ. FT.

Polyisocyanurate Insulation – 2" thick or greater

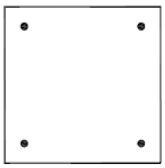
4'x4' FIELD (4)

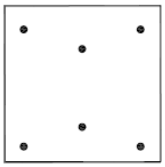
4'x4' PERIMETERS (6)

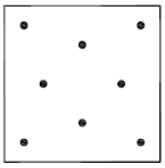
4'x4' CORNERS (8)

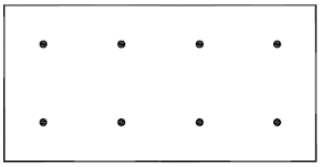
4'x8' FIELD (8)

1 FASTENER PER EVERY 4 SQ. FT.

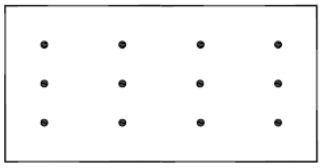
4'x8' PERIMETERS (12)

1 FASTENER PER EVERY 2.66 SQ. FT.

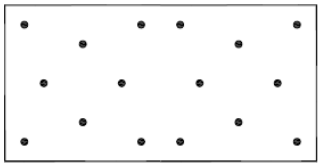
4'x8' CORNERS (16)

1 FASTENER PER EVERY 2 SQ. FT.

Dens Deck or SecurRock

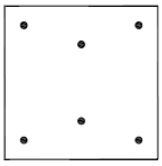

4'x4' FIELD (6)

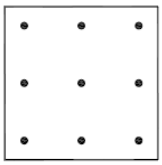

4'x4' PERIMETERS (9)

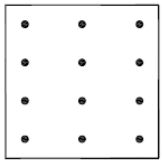

4'x4' CORNERS (12)

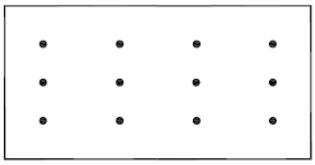

4'x8' FIELD (12)

1 FASTENER PER EVERY 2.66 SQ. FT.

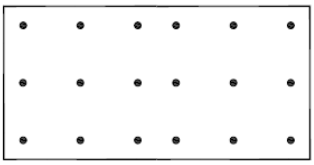

4'x8' PERIMETERS (18)

1 FASTENER PER EVERY 1.77 SQ. FT.

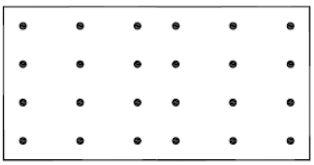

4'x8' CORNERS (24)

1 FASTENER PER EVERY 1.33 SQ. FT.

OSB

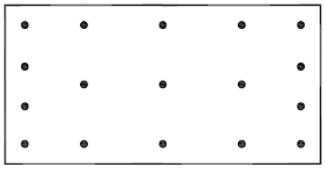

4'x8' FIELD (17)

FASTENER PER EVERY 1.88 SQ. FT.

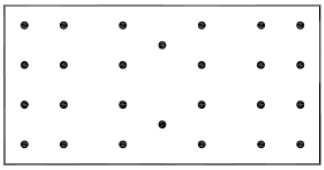

4'x8' PERIMETERS (26)

1 FASTENER PER EVERY 1.23 SQ. FT.

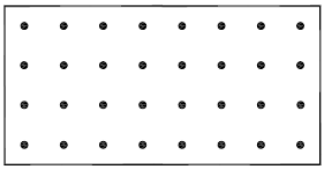

4'x8' CORNERS (32)

1 FASTENER PER EVERY 1 SQ. FT.

Perimeter enhancements:

To meet increased uplift requirements in the perimeters and corners of each roof area, additional insulation attachment provisions must be installed as follows:

Perimeters – insulation attachment to be increased 50% over the field attachment requirements with a maximum of one (1) fastener every one (1) square feet.

Corners – insulation attachment to be increased 50% over the field attachment requirements with a maximum of one (1) fastener every one (1) square feet.

All of the insulation must be pre-fastened to the deck with Mule-Hide #12 DP fasteners and 3" plates at a minimum as shown above. All fasteners must be at least six (6) inches from the edge of the board and centered as shown.

See attached details MHFM-208, MHFM-212, & MHFM-216 for examples of Factory Mutual Attachment patterns for those projects requiring Factory Mutual Approval.

Fasteners Available From Mule-Hide

Typical Fasteners - Refer to Mule-Hide website at www.mulehide.com for most current information.

Fastener (1) (2)	**Uses**	**Roof Deck** (3)
Mule-Hide DP #12	Insulation attachment Only	Steel, Wood
Mule-Hide HDP-14	Insulation attachment System attachment	Steel, Wood, Concrete
Mule-Hide EHD-15 (4)	System attachment	Steel, Wood, Concrete

Notes:

1. Heavier gauge fasteners may be required to meet Factory Mutual or code requirements.
2. Other fasteners may be considered, submit request to Mule-Hide prior to bidding.
3. Contact Mule-Hide Technical Department for non-standard roof decks.
4. Required for Factory Mutual, mechanically attached systems

Attachment of Wood Nailers

A. Wood nailers shall be firmly attached to the deck, wall or existing structurally sound surface, so as to resist a force of 200 pounds per linear foot in any direction (fastening 16 inch o.c. maximum is recommended for most applications). See below the Factory Mutual Loss Prevention Data Bulletin 1-49 for recommended type and size of fasteners, nailers and spacing:

Factory Mutual
Loss Prevention Bulletin 1-49 and Other Nailer Attachment

	Fastener Type			
Deck Type	Mule-Hide Fastener	1/2" Dia. Anchor Bolts	3/8" Dia. Anchor Bolts	3/4" Dia. Structural Steel Posts
1/2" to 5/8" Plywood	12" o.c.	N/A	N/A	N/A
5/8" or Greater Plywood	16" o.c.	N/A	N/A	N/A
Wood Plank	16" o.c.	N/A	N/A	N/A
Existing 2X Wood Nailers	16" o.c.	N/A	N/A	N/A
Steel Deck	16" o.c.	N/A	N/A	N/A
Concrete	16" o.c.	4'0" o.c.*	2'8" o.c.**	N/A
Structural Steel	N/A	N/A	N/A	4'0" o.c.
Lightweight Concrete	16" o.c.	N/A	N/A	N/A

* Within 8' of all corners, spacing shall be 2'0" o.c.
** Within 8' of all corners, spacing shall be 16" o.c.

SECTION 2

MULE-HIDE PRODUCTS CO., INC.

TPO SYSTEM WARRANTY INFORMATION

Warranty Program Overview

Heat Weld Warranty Offerings

Owner's Care and Maintenance

Contractor Eligibility Warranty Program

10 / 15 Year Warranty - LL-TPO Design Summary

10 / 15 Year Warranty - FA-TPO Design Summary

10 / 15 Year Warranty - MA-TPO Design Summary

10 / 15 Year Warranty - Premium Warranty Enhancements

PLEASE CONSULT THE MULE-HIDE WEBSITE FOR THE MOST CURRENT INFORMATION

"The name trusted in roofing since 1906"

MULE - HIDE PRODUCTS CO., INC.

1195 Prince Hall Drive
Beloit, WI 53511-3964

Phone (608)365-3111
Fax (608)365-7852
www.mulehide.com

P.O. Box 1057
Beloit, WI 53512-1057

Warranty Program

OVERVIEW

Overview

Mule-Hide Products Co., Inc. ("Mule-Hide") offers several types of warranties ranging from material warranties to System warranties. These warranties are available in 10, 15, and 20 year durations. Mule-Hide presently offers three types of warranties for our single-ply membranes/systems:

- Roofing Membrane Limited Warranties
- Standard System Warranties
- Premium System Warranties

A Membrane Only warranty may be combined with select Standard or Premium warranties. Available selections are as follows;

- Standard-10 or Premium-10 + Membrane-15 OR Membrane-20
- Standard-15 or Premium-15 + Membrane-20

Roofing Membrane Limited Warranty

This warranty covers only the Mule-Hide membrane (or portion thereof) determined by Mule-Hide to be defective and resulting in roof leaks. This Warranty does not cover workmanship or other components not supplied by Mule-Hide. Mule-Hide does not perform inspections of the installation before issuing the Roofing Membrane Limited Warranty. A Mule-Hide Warranty Application must be submitted to Mule-Hide to obtain this warranty (check with Mule-Hide for those programs that may not require submittal of a Warranty Application). Certain warranties may require fees and proof of purchase. Mule-Hide recommends that Warranty Applications be submitted for review prior to project start.

Note: *Projects requesting a 20-year Roofing Membrane Limited Warranty require specific membranes and design enhancements. Contact Mule-Hide for additional information.*

Standard System Warranty

The Standard System warranty is a "No Dollar Limit" labor and material warranty. It covers the Mule-Hide labeled membrane and other components supplied by Mule-Hide and must be installed by a Mule-Hide Warranty Eligible Applicator. The Standard System warranty does not cover the roof insulation, attachment of the roof insulation, or metal flashing components (unless Mule-Hide Metal Accessories are purchased from Mule-Hide). A Mule-Hide Warranty Eligible Applicator must submit a Warranty Application and the appropriate fee to Mule-Hide. Standard System warranties require inspections by a Mule-Hide representative. Mule-Hide recommends that Warranty Applications be submitted for review prior to project start.

Note: *Projects requesting a 20-year Standard System Warranty require specific membranes and design enhancements. Contact Mule-Hide for additional information.*

Mule-Hide Warranty Program Overview - Continued

Premium System Warranty

The Premium System warranty is a "No Dollar Limit", labor and material warranty. It covers the Mule-Hide labeled membrane, insulation, other components supplied by Mule-Hide, as well as approved products (such as metal flashing, insulation adhesive and other pre-approved accessories) installed by a Mule-Hide Warranty Eligible Applicator. The Warranty Application and the appropriate fee must be submitted to Mule-Hide by a Mule-Hide Warranty Eligible Applicator. Premium System warranties require inspections by a Mule-Hide representative. Distributor invoices showing purchase of Mule-Hide materials are required and are to be submitted to Mule-Hide before the warranty can be issued. Mule-Hide recommends that Warranty Applications be submitted for review prior to project start. *Premium System Warranties require the use of Mule-Hide Polyisocyanurate Insulation.*

Note: *Projects requesting a 20-year Premium Warranty require specific membranes and design enhancements. Contact Mule-Hide for additional information.*

Fees are required for all System warranties. System Warranties must be obtained through a Mule-Hide Warranty Eligible Applicator. System warranties are not available for residential projects. Membrane material warranties do not require the applicator to be Mule-Hide Warranty Eligible, but certain membrane/material warranties do require fees.

Terms and Conditions of Warranties

Mule-Hide's obligations under these warranties are limited to the specific terms and conditions of the respective Warranty. Sample copies of the Mule-Hide Warranties are available from Mule-Hide upon request for review of the actual terms, conditions and limitations. Mule-Hide warranties are not issued until the warranty fee has been paid and any required Distributor invoices have been received by Mule-Hide.

Mule-Hide Warranty Eligible Applicator Program

Those contractors wishing to become Mule-Hide Warranty Eligible Applicators for the purpose of offering System Warranties should contact their local Mule-Hide Territory Manager. Please call Mule-Hide at 800-786-1492 or check the Mule-Hide web site (www.mulehide.com) to obtain the name and phone number of your local Mule-Hide Territory Manager.

Mule-Hide Warranty Types

Refer to the appropriate product pages for listings of available warranty types by product line. Mule-Hide reserves the right to change this information at any time. Contact Mule-Hide or check the Mule-Hide web site (www.mulehide.com) for the latest updates regarding changes or modifications to this document or the Mule-Hide Warranty Program.

"The name trusted in roofing since 1906"

MULE-HIDE PRODUCTS CO., INC.

1195 Prince Hall Drive
Beloit, WI 53511-3964

Phone (608)365-3111
Fax (608)365-7852

P.O. Box 1057
Beloit, WI 53512-1057

www.mulehide.com

WARRANTY OFFERINGS

HEAT-WELD

TPO and PVC

Warranty Type	Warranty Fees Cost/SF	Min $
Membrane Only - 10 Years	$0.00	$25.00
Membrane Only - 15 Years [4]	$0.01	$100.00
Membrane Only - 20 Years [4,6]	$0.02	$200.00
Standard - 10 Years [3,4]	$0.05	$400.00
Standard - 15 Years [3,4]	$0.08	$525.00
Standard - 20 Years [2,3,4,6]	$0.11	$800.00
Standard -10 + Membrane -15 [3,4,5]	$0.06	$500.00
Standard -10 + Membrane -20 [3,4,5]	$0.07	$600.00
Standard -15 + Membrane -20 [3,4,5,6]	$0.10	$725.00
Premium - 10 Years [1,3,4]	$0.04	$350.00
Premium - 15 Years [1,3,4]	$0.07	$475.00
Premium - 20 Years [1,2,3,4,6]	$0.10	$750.00
Premium-10 + Membrane-15 [1,3,4,5]	$0.05	$450.00
Premium-10 + Membrane-20 [1,3,4,5,6]	$0.06	$550.00
Premium-15 + Membrane-20 [1,3,4,5,6]	$0.09	$675.00

Important Warranty Notes:

Current Warranty fee schedules are as listed. Please contact Mule-Hide for pre-approval when applying for any non-published Warranty timeframes.

[1] Mule-Hide Premium Warranties are offered only on new construction and total tear-off systems, or for recover (retrofit) systems when an independent company has performed a moisture survey. Accepted survey types are nuclear, infrared and conductive. The moisture survey must be submitted with the Warranty application for recover applications. All wet roofing materials found in the survey must be removed.

[2] Refer to 20-Year Design Enhancement Documents

[3] These warranties are only available to Mule-Hide Warranty Eligible Applicators.

[4] Commercial projects only. Standard and Premium System Warranties are not available for residential projects.

[5] Upon expiration of the Standard or Premium warranty component the terms and conditions of the membrane only warranty apply.

[6] Requires Min. 60 mil reinforced TPO or Min. 60 mil reinforced PVC.

Mule-Hide Limited Membrane and NDL System Warranties are only valid when components are installed according to manufacturers' specifications. Always refer to Mule-Hide Application Guidelines for additional information.

"The name trusted in roofing since 1906"

MULE - HIDE PRODUCTS CO., INC.

1195 Prince Hall Drive
Beloit, WI 53511-3964

Phone (608)365-3111
Fax (608)365-7852
www.mulehide.com

P.O. Box 1057
Beloit, WI 53512-1057

Care and Maintenance

OVERVIEW

Overview

Following are some recommendations on how to care for your roof to help ensure a long useful service life.

Inspect your roof on a regular basis

All roofs require periodic maintenance and inspections in order to perform as designed and to provide a long useful service life. Mule-Hide recommends that your roofing system be inspected at least twice a year, and after every major storm. These inspections should be performed by a Mule-Hide Warranty Eligible Applicator or by someone specially trained in single-ply and modified bitumen roofing installations.

The inspection should concentrate on high-risk areas such as roof hatches, drains and around all rooftop equipment as well as general inspection of the entire roof. The inspector should be looking for membrane damage (cuts and tears), oil or Freon leaks, chemical spills, or water infiltration into the roofing System.

Such inspections are needed because problems stemming from neglect, abuse, contamination, accidents, or storm damage can result in extensive and costly repairs if not detected and repaired promptly.

Regular inspection and maintenance is also critical to sustaining the roof Warranty in force. Your Warranty could be compromised if the roof fails due to lack of basic maintenance on the part of the building owner. Therefore, it is critical that the owner understands and follows our maintenance requirements.

Drainage

Ponding water is a source of potential damage for all roofing systems. A small puncture or cut in a well-drained roofing system may result in limited damage. However, a significant amount of damage may occur to the roof insulation, roof deck, and building interior if the same puncture or cut occurs in an area of ponding water. Good roofing practice suggests that water not be allowed to remain on the roof for more than 48 hours after a rainfall. Roof drainage should be evaluated by the specifier in accordance with all applicable codes. In addition, the roof surface must be kept clean of debris that can impede drainage. This is especially important at drain areas to avoid clogging. Such areas include roof drains, wall scuppers, gutters and downspouts.

Care and Maintenance Information Continued…….

Chemicals & Petroleum Products

Even though our membranes provide outstanding resistance to natural weather, exposure to organic substances such as oils, fats, and organic solvents may affect their durability. How a membrane is affected depends upon the membrane's composition. An adverse reaction to a substance typically results in membrane splitting, cracking, and swelling.

Periodic inspections can help assure that such damage is quickly identified and addressed. If swelling occurs, contact Mule-Hide immediately.

Some common sources of potential problems include:

Air Conditioner Compressors - Oil may be spilled during maintenance of the compressor or it may leak oil.

Kitchen Exhaust Fans - Grease from cooking exhausts can accumulate on the roofing surface, especially if the units are not serviced frequently.

Animal Fats – EPDM & Self-Adhering Mod Bit Membranes

EPDM and Self-Adhered Modified Bitumen Membranes are susceptible to damage from kitchen wastes (vegetable oils) or other animal fats that are vented directly onto the roof surface. If incidental contact is likely, contact Mule-Hide for recommendations on preventative measures.

Animal Fats – TPO & PVC Membranes

The use of TPO and PVC membranes for restaurant rooftops will not void the Warranty. However, a rooftop maintenance program must be in-place to ensure that accumulations of animal fats/grease are regularly removed and the membrane surface cleaned with a mixture of warm soap and water and/or by other approved cleaning methods (see Cleaning below).

Cleaning

General cleaning of the field membrane can be accomplished with detergent and water. Mule-Hide recommends a detergent such as Trisodium phosphate (TSP), a granular detergent that is available at most paint stores. Use of TSP is preferred as it does not leave a 'film' on the membrane that may inhibit seaming or patching.

Mix the TSP with water as per directions and brush wash the affected area by hand with a stiff bristled brush. Thoroughly rinse with clean water and repeat as necessary.

For more aggressive cleaning, a polypropylene scouring pad can be used in conjunction with the TSP detergent.

A light power wash can also be used, however, care must be taken to not damage the membrane, flashings, or field seams.

Before seaming or repairs are attempted, ensure that the surface of the field membrane is clean, has been thoroughly rinsed to remove all detergent and contaminates, and that the membrane has been allowed to dry completely.

To maximize reflectivity, white membrane(s) should be cleaned once every two years.

Care and Maintenance Information Continued…….

Foot Traffic

Mule-Hide membranes are designed to be part of a roofing system and are not a traffic-bearing component of the building. However, virtually all roofs are subjected to some amount of roof traffic, such as that required to service roof top units.

When it is necessary for workers to be on the roof to service rooftop equipment, e.g., HVAC units, antennas, etc., workers should be cautioned to use walkways and to exercise care with their tools and equipment to avoid puncturing the roofing membrane. Mule-Hide recommends that the building owner or property manager keep a "Roof-Top Maintenance and Activity Log" to track dates and activities by personnel or other trades.

Walkways must be provided if regular rooftop traffic is required, such as servicing of rooftop equipment on a regular basis. If a unit on the roof has a monthly maintenance schedule, walkways to and around the unit are recommended. Exercise caution when not walking on walkways, especially on white membranes (White-on-Black EPDM, Elastomeric Acrylic Coatings, TPO and PVC) since ice or frost build-up may not be visible. All membranes are slippery when wet.

Metal Work

Moisture can enter your roofing system in many different ways. Not all leaks are the result of issues with the roofing system. Moisture can also enter the roofing system and building through building walls, parapets, roof top units, skylights, and variety of other items. Maintaining these in a watertight condition will help to prevent damage to your roofing system. In addition, leaking that occurs from any of these items is not covered under the Mule-Hide warranty.

Keep roof maintenance items, such as counterflashings, metal curbs, metal ducts, etc., sealed watertight at all times.

Leaks – Standard & Premium Warranties

If you have a leak, check for the obvious such as clogged roof drains, broken skylights, loose counterflashings, broken water pipes, leaking roof units, and storm damage. Note when the leaking occurs. Items such as heavy or light rain, wind direction, temperature and time of day are important clues for tracking suspected leaks. Does the leak start and stop with the rain, or does leaking continue after the rain has ceased?

Leaks resulting from the deterioration or failure of building components or physical damage are not covered by the Warranty. If you believe that the leak is related to the Mule-Hide Warranty, please notify Mule-Hide's Warranty Department at (800) 786-1492 as soon as possible and follow up with written notification. The building owner must pay the investigation and repair cost if the problem is found to be outside the scope of the Warranty.

Temporary Repairs

If your roof becomes damaged, prompt action can limit damage to our roofing system. Small cuts and tears can be repaired with a one-part urethane sealant. Remember, these are only temporary repairs to the Mule-Hide membrane. Contact Mule-Hide for additional information.

Care and Maintenance Information Continued…….

Roof Cement

Do not use Any Asphalt Product to make repairs on single ply membranes (EPDM, TPO, or PVC) as it **WILL** degrade the membrane. If any asphalt product is used on the roofing membrane, that area will have to be removed and replaced at the Owner's expense.

Changes to Roof

Notify Mule-Hide of any changes made to the roofing system. This includes replacement of existing roof top equipment, installation of new roof top equipment, TV Antennas, tie-ins to new roofing systems, etc. Contact Mule-Hide before any changes are made to the roofing system so that the proper procedure can be followed and the change authorized by Mule-Hide. Un-authorized changes to your roofing system can compromise your Mule-Hide warranty.

This overview represents the applicable information available at the time of publication. Please visit the Mule-Hide website at www.mulehide.com, or contact either Mule-Hide or your Mule-Hide Territory Manager for information that may be more current.

"The name trusted in roofing since 1906"

MULE - HIDE PRODUCTS CO., INC.

1195 Prince Hall Drive
Beloit, WI 53511-3964

Phone (608)365-3111
Fax (608)365-7852
www.mulehide.com

P.O. Box 1057
Beloit, WI 53512-1057

Contractor Warranty Eligibility

PROGRAM

Contractors wishing to become Warranty Eligible, should obtain a **Contractor Warranty Eligibility Application** form from their Mule-Hide Territory Manager. You can find the contact information for your Mule-Hide Territory Manager by checking the Mule-Hide website at www.mulehide.com or by calling (800) 786-1492 and asking for the Warranty Program Coordinator.

The Contractor Warranty Eligibility Application form shall be filled out completely and signed by an officer of the company. Forward the completed application to the Mule-Hide National Support Center, marked to the attention of the Warranty Program Coordinator. Submission of the Contractor Warranty Eligibility Application form does not guarantee or imply acceptance by Mule-Hide.

Upon receipt of the application, the Mule-Hide Territory Manager will be advised of the application submittal and will contact the contractor to evaluate his qualifications and training needs. Training requirements may include attendance at a training seminar and a commitment to a training session for the contractor's crew(s). A review of the Contractor's workmanship on completed roofing projects will be requested and documented by the Mule-Hide Territory Manager.

Only Warranty Eligible Contractors are able to apply for Mule-Hide's Standard or Premium System (labor and material) Warranties and Coatings System Warranties. **It is the contractor's responsibility to contact Mule-Hide should they wish to be able to obtain System Warranties**.

MULE-HIDE PRODUCTS CO., INC
10 or 15 Year Warranty Design Summary
With Standard 55-MPH Wind Speed Coverage
For Ballasted TPO

TPO Systems

All products specified for this roofing system must be manufactured or approved by Mule-Hide Products Co. This criteria is limited to buildings of 100' in height or less, located in urban or suburban exposure areas. Not applicable for coastal or high wind areas.

1. 0.045" or 0.060" or 0.080" thick Mule-Hide Reinforced TPO
2. On 0.045" thick membrane, all 'T' joints must be creased with a roller while still hot as shown in Detail MHT-UN-105A.
3. On 0.060" or 0.080" thick membrane, all "T" joints must be overlaid with TPO Non-Reinforced Flashing Membrane with heat welded seams as shown in Detail MHT-UN-105B.
4. All Field/Wall seam transitions on all membrane thicknesses must be overlaid with TPO Non-Reinforced Flashing Membrane with heat welded seams as shown in Detail MHT-UN-105C.
5. All field seams must be heat welded.

Deck Type / Typical Fastener - Refer to Specifications for minimum pullout criteria.

1. Any roof deck capable of supporting the weight of a Ballasted System may be used.
2. The determination that the roof deck can support the required additional loads shall be the responsibility of the building owner/owner's representative.

Slope Requirement/Drainage

1. Positive drainage required (no ponding 48 hours after a rain)
2. 1/4" per horizontal foot preferred
3. 1/8" slope with sufficient number of drains and crickets/saddles may be considered
4. Maximum slope of 2:12

Construction Type

1. New Construction
2. Reroof - with full tear-off
3. Recover - all wet materials removed

Insulation/Overlayment*

Insulation Type or Overlay
Approved Polyisocyanurate - Min 1" thick - Min 18 psi
Approved Extruded Polystyrene - Min 3/4" - Min 15 psi
Approved Expanded Polystyrene - Min 1" - Min 1 lbs density
HD Fiberboard - Min 1/2" thick- Installed over Approved Insulation

***NOTES:**

1. Thicknesses stated are for single layer of material.
2. Consult Specification Manual for list of approved insulations for use under overlayment.
3. Insulation must be loose-laid over an approved substrate.
4. Mechanical attachment of insulation is not permitted.
5. An approved insulation adhesive may be used with prior approval.

MULE-HIDE PRODUCTS CO., INC.
10 or 15-Year Warranty Design Summary
With Standard 55-MPH Wind Speed Coverage
For Ballasted TPO

Ballast Requirements

Building Height	Ballast Requirements
Up to 25'	#2 Stone @ 13#/SF for 10' wide perimeter #4 Stone @ 10#/SF for field of roof
26' to 50'	#2 Stone @ 13#/SF for 20' corners #2 Stone @ 13#/SF for 10' wide perimeter #4 Stone @ 10#/SF for field of roof
Over 50'	Mule-Hide recommends the use of a interlocking ballast paver system

Concrete Pavers

1. Minimum Size: 2' x 2' x 2"
2. Minimum Weight: 22 pounds per square foot
3. Membrane Protection: Rubber or plastic pedestals, 4" x 4" sections of Mule-Hide Walkway Pads, or HP Protection Mat.
4. Paver type must be submitted to Mule-Hide for approval prior to bid.

Metal Accessories

1. All Metal copings, gravel stops, fascia, and drip aprons must be installed according to Mule-Hide approved details.
2. Conventional metal edge details that require flanges to be 'stripped in' may be overlaid with TPO Cover Tape or White EPDM Cured Cover Tape (Mate-Line Tape).
3. All Metal Scuppers must have welded (soldered) seams.
4. Metal accessories provided by Mule-Hide will be included in Standard and Premium System warranties.

Other Requirements

1. No 'As-Built' projects. All projects are to be reviewed and approved prior to installation.
2. Shop drawings must include all pertinent details.
3. Contact Mule-Hide Technical Department for specific code requirements such as Florida NOA, Factory Mutual (FM) or Underwriters Laboratory (UL).

NOTES:

1. **This is a summary of the Mule-Hide TPO Ballasted System Specification, as written in the Mule-Hide TPO Specification Manual. Refer to Mule-Hide TPO Specification Manual for complete specification and details.**

2. **The information contained in this document is general information. Requirements may be different for each specific job based on the conditions of each building. Always contact Mule-Hide Technical Department to review the specific job conditions prior to bidding the project.**

MULE-HIDE PRODUCTS CO., INC
10 or 15 Year Warranty Design Summary
With Standard 55-MPH Wind Speed Coverage
For Fully Adhered TPO

TPO Systems

All products specified for this roofing system must be manufactured or approved by Mule-Hide Products Co. This criteria is limited to buildings of 100' in height or less, located in urban or suburban exposure areas. Not applicable for coastal or high wind areas.

Membrane / Adhesive Type / Other

1. 0.045" or 0.060" or 0.080" thick Mule-Hide Reinforced TPO
2. Mule-Hide TPO Bonding Adhesive - Solvent Based or Mule-Hide Low Voc Bonding Adhesive – Solvent Based, Mule-Hide Low Voc 1168 Bonding Adhesive, or WBBA-2000 Water Base Bonding Adhesive.
3. On 0.045" thick membrane, all 'T' joints must be creased with a roller while still hot as shown in Detail MHT-UN-105A.
4. On 0.060" or 0.080" thick membrane, all "T" joints must be overlaid with TPO Non-Reinforced Flashing Membrane with heat welded seams as shown in Detail MHT-UN-105B.
5. All Field/Wall seam transitions on all membrane thicknesses must be overlaid with TPO Non-Reinforced Flashing Membrane with heat welded seams as shown in Detail MHT-UN-105C.
6. All field seams must be heat welded.

Deck Type / Typical Fastener - Refer to Specifications for minimum pullout criteria.

Standard Roof Deck (4)	**Insulation Fastener** (1)	**Insulation Plate** (5)
Steel (22 gauge or heavier)	Mule-Hide DP #12	Mule-Hide 3" Metal Stress Plates
Structural Concrete (3,000 psi)	Mule-Hide HD-14 (2)	Mule-Hide 3" Metal Stress Plates
Plywood (Min 15/32" thick)	Mule-Hide DP #12	Mule-Hide 3" Metal Stress Plates
Wood Plank (Min 1-1/2" thick)	Mule-Hide DP #12	Mule-Hide 3" Metal Stress Plates
Fibrous Cement & Gypsum (2)(3)	TL Fasteners by Tru-Fast	3" TL Galvalume Insulation Plate by Tru-Fast

Notes:

1. Heavier gauge fasteners may be required to meet Factory Mutual or code requirements.
2. Other fasteners may be considered, submit request to Mule-Hide prior to bidding.
3. Pullout testing is required, must exceed 360 pounds with TL Fastener.
4. Contact Mule-Hide Technical Department for other roof decks or non-standard roof decks.
5. 2.4" Seam Plates are NOT approved for use to fasten insulation.

Slope Requirement/Drainage

1. Positive drainage required (no ponding 48 hours after a rain)
2. 1/4" per horizontal foot preferred
3. 1/8" slope with sufficient number of drains and crickets/saddles may be considered

Construction Type

1. New Construction
2. Reroof - with full tear-off
3. Recover - all wet materials removed

MULE-HIDE PRODUCTS CO., INC.
10 or 15-Year Warranty Design Summary
With Standard 55-MPH Wind Speed Coverage
For Fully Adhered TPO

Insulation/Overlayment - Mechanical Attachment into Standard Roof Decks*

Insulation Type or Overlay	Fasteners per 4' x 8' board		
	Field	**Perimeter**	**Corner**
Approved Polyisocyanurate - Min 2" thick (top layer)	8	12	16
Approved Polyisocyanurate - Min 1.5" up to 2" thick	12	18	24
HD Fiberboard - Min 1/2" thick- Installed over Approved Insulation	16	24	32
Dens Deck Prime - Min 1/4" thick - Installed over Approved Insulation	12	18	24
OSB - Min 7/16" thick - Installed over Approved Insulation	17	25	32
Approved OSB/Polyisocyanurate Composite - Min 2" thick	17	25	32

***NOTES:**

1. Thicknesses stated are for single layer of material.
2. Consult Specification Manual for list of approved insulations for use under overlayment.
3. Polyisocyanurate less than 1.5" in thickness requires approved overlayment.
4. Insulation fastening density shall not be less than 1 per 2 square feet on fibrous cement and gypsum decks.
5. Certain codes may require additional fastening requirements.
6. Mule-Hide defines perimeter areas as a minimum of 8 feet. Corners areas are the intersections of the perimeter areas.
7. Factory Mutual defines perimeter areas as the lesser of 0.1 times the building width or 0.4 times the building height. Corners areas are the intersections of the perimeter areas.

Insulation/Overlayment - Adhesive Attachment

1. Insta-Stik by Dow Chemical Company - Warranty Application must include a copy of the manufacture's letter of acceptance for the project, including application rates for that specific project.
2. Weather-Tite by Millenium - Warranty Application must include a copy of the manufacture's letter of acceptance for the project, including application rates for that specific project.
3. Other Manufactures may be considered, submit prior to bidding.

Metal Accessories

1. All Metal copings, gravel stops, fascia, and drip aprons must be installed according to Mule-Hide approved details.
2. Conventional metal edge details that require flanges to be 'stripped in' may be overlaid with TPO Cover Tape or White EPDM Cured Cover Tape (Mate-Line Tape).
3. All Metal Scuppers must have welded (soldered) seams.
4. Metal accessories provided by Mule-Hide will be included in Standard and Premium System warranties.

Other Requirements

1. No 'As-Built' projects. All projects are to be reviewed and approved prior to installation.
2. Shop drawings must include all pertinent details.
3. Contact Mule-Hide Technical Department for specific code requirements such as Florida NOA, Factory Mutual (FM) or Underwriters Laboratory (UL).

NOTES:

1. **This is a summary of the Mule-Hide TPO Fully Adhered System Specification, as written in the Mule-Hide TPO Specification Manual. Refer to Mule-Hide TPO Specification Manual for complete specification and details.**

2. **The information contained in this document is general information. Requirements may be different for each specific job based on the conditions of each building. Always contact Mule-Hide Technical Department to review the specific job conditions prior to bidding the project.**

MULE-HIDE PRODUCTS CO., INC
10 or 15 Year Warranty Design Summary
With Standard 55-MPH Wind Speed Coverage
For Mechanically Attached TPO

TPO Systems

All products specified for this roofing system must be manufactured or approved by Mule-Hide Products Co. This criteria is limited to buildings of 100' in height or less, located in urban or suburban exposure areas. Not applicable for coastal or high wind areas.

Membrane

1. 0.045" or 0.060" or 0.080" thick Mule-Hide Reinforced TPO
2. Mule-Hide TPO Bonding Adhesive - Solvent Based or Mule-Hide Low Voc Bonding Adhesive – Solvent Based, Mule-Hide Low Voc 1168 Bonding Adhesive, or WBBA-2000 Water Base Bonding Adhesive.
3. On 0.045" thick membrane, all 'T' joints must be creased with a roller while still hot as shown in Detail MHT-UN-105A.
4. On 0.060" or 0.080" thick membrane, and all warranties longer than 15 years, all "T" joints must be overlaid with TPO Non-Reinforced Flashing Membrane with heat welded seams as shown in Detail MHT-UN-105B.
5. All Field/Wall seam transitions on all membrane thicknesses must be overlaid with TPO Non-Reinforced Flashing Membrane with heat welded seams as shown in Detail MHT-UN-105C.
6. All field seams must be heat welded.

Deck Type / Typical Fastener - Refer to Mule-Hide Specifications for minimum pullout criteria.

Standard Roof Deck	**Max Sheet Width**	**Max Fastener Spacing**	**Fastener** (1)	**Seam Plate** (1)(5)
Steel - Min 22 ga.	12' 10' 8'	6" OC 12" OC 12" OC	HD-14 HD-14 HD-14	2.4" 2.4" 2.4"
Wood Plank - Min 2x or Plywood - Min 23/32"	12' 10' 8'	6" OC 12" OC 12" OC	HD-14 HD-14 HD-14	2.4" 2.4" 2.4"
Plywood - Min 15/32"	8'	6" OC	HD-14	2.4"
OSB – Min 15/32" (3)	8'	6" OC	HD-14	2.4"
Structural Concrete - Min 3,000 psi	12' 10' 8'	6" OC 12" OC 12" OC	HD-14 HD-14 HD-14	2.4" 2.4" 2.4"

Notes:

1. Heavier gauge fasteners may be required to meet Factory Mutual or code requirements.
2. Other fasteners may be considered, submit request to Mule-Hide prior to bidding.
3. Mechanically attached systems are not allowed over Oriented Strand Board (OSB) decks without prior approval by the Mule-Hide Technical Department. Mule-Hide will not issue system warranties on "As-Built" projects where Mule-Hide did not grant approval prior to the start of the work.
4. Contact Mule-Hide Technical Department for other roof decks or non-standard roof decks.
5. 3" Insulation Plates are NOT approved for use to fasten membrane.

Slope Requirement/Drainage

1. Positive drainage required (no ponding 48 hours after a rain)
2. 1/4" per horizontal foot preferred
3. 1/8" slope with sufficient number of drains and crickets/saddles may be considered

Construction Type

1. New Construction
2. Reroof - with full tear-off
3. Recover - all wet materials removed

MULE-HIDE PRODUCTS CO., INC.
10 or 15-Year Warranty Design Summary
With Standard 55-MPH Wind Speed Coverage
For Mechanically Attached TPO

Insulation/Overlayment - Mechanical Attachment into Standard Roof Decks*

Insulation Type or Overlay	Board Size	
	4' x 4'	4' x 8'
Approved Polyisocyanurate - Min 1.0" thick (top layer) - Min 20 psi	4	6
Approved Polyisocyanurate - Min 2.0" thick (top layer) - Min 20 psi	4	5
Extruded Polystyrene - Min 1.0" thick - Min 25 psi	4	6
HD Fiberboard - Min 1/2" thick- Installed over Approved Insulation	4	6
Dens Deck Prime - Min 1/4" thick - Installed over Approved Insulation	4	6

***NOTES:**
1. Gypsum board or suitable base sheet may be approved as needed to meet required fire code.
2. Consult Specification Manual for list of approved insulations for use under overlayment.
3. Contact Mule-Hide Technical Department for Polyisocyanurate less than 1.5" in thickness.
4. Certain codes may require additional fastening requirements.

Insulation/Overlayment - Adhesive Attachment
1. Insta-Stik by Dow Chemical Company
2. Weather-Tite by Millenium
3. Other Manufactures may be considered, submit prior to bidding.

Metal Accessories
1. All Metal copings, gravel stops, fascia, and drip aprons must be installed according to Mule-Hide approved details.
2. Conventional metal edge details that require flanges to be ‘stripped in’ may be overlaid with TPO Cover Tape or White EPDM Cured Cover Tape (Mate-Line Tape).
3. All Metal Scuppers must have welded (soldered) seams.
4. Metal accessories provided by Mule-Hide will be included in Standard and Premium System warranties.

Other Requirements
1. No ‘As-Built’ projects. All projects are to be reviewed and approved prior to installation.
2. Shop drawings must include all pertinent details.
3. Contact Mule-Hide Technical Department for specific code requirements such as Florida NOA, Factory Mutual (FM) or Underwriters Laboratory (UL).

MULE-HIDE PRODUCTS CO., INC.
10 or 15-Year Warranty Design Summary
With Standard 55-MPH Wind Speed Coverage
For Mechanically Attached TPO

Perimeter Enhancement Widths - Number Required

Building Height	Perimeter Sheets
0 to 34 feet	Minimum of one (1) perimeter enhancement width
35 to 69 feet	Minimum of two (2) perimeter enhancement widths
70 to 100 feet	Minimum of two (2) perimeter enhancement widths (for wind zones up to 80 mph)
70 to 100 feet (wind zones over 80 mph)	Contact Mule-Hide Technical Department
Over 100 feet	Contact Mule-Hide Technical Department

Perimeter Enhancement – Width Dimension

Width of Field Sheet	Width of Perimeter Enhancement		
	Half Sheets	10” RUSS	Plates/Fasteners Through Membrane
8'	4'	4'	4'
10'	6’	5’	5’
12'	6'	6'	6'

NOTES:

1. **This is a summary of the Mule-Hide TPO Mechanically Attached System Specification, as written in the Mule-Hide TPO Specification Manual. Refer to Mule-Hide TPO Specification Manual for complete specification and details.**

2. **The information contained in this document is general information. Requirements may be different for each specific job based on the conditions of each building. Always contact Mule-Hide Technical Department to review the specific job conditions prior to bidding the project.**

MULE-HIDE PRODUCTS CO., INC
10 or 15 Year **Premium** Warranty Upgrade Requirements With Standard 55-MPH Wind Speed Coverage

ALL Systems

All products specified for this roofing system must be manufactured or approved by Mule-Hide Products Co. These are upgrades to Mule-Hide's Standard Specifications that are required for either a 10 or 15 Year Premium Warranty.

INSULATION/OVERLAYMENT

A 10 or 15 Year Premium Warranty requires the use of following insulation / overlayments .

Insulation Type or Overlay
Mule-Hide Polyisocyanurate (1) (2)
Insulfoam II, VIII, IX, XIV and XV expanded polystyrene (1), (3), (4), (5)
Insulfoam R-Tech expanded polystyrene (1), (3), (5), (6), (7)
Insulfoam R-Tech Fan-Fold (3), (5), (6), (7), (8)
Approved Overlay - Installed over Mule-Hide Polyisocyanurate or Insulfoam

NOTES:

1. Minimum 1" thickness for Ballasted or Mechanically Attached Systems.
2. Minimum 1.5" Thickness for Fully Adhered Systems.
3. Contractor to provide proof of purchase of Mule-Hide / Insulfoam Insulation.
4. Minimum 1.25 lb density for all systems.
5. Must have approved overlay for Fully Adhered Systems.
6. Polymeric facer side up
7. Coverboard recommended for high traffic areas

INSULATION ATTACHMENT

Mechanical Attachment - Must use Mule-Hide Insulation plates and fasteners. Fastener density and placement must be as per Mule-Hide Specifications and recommendations. Contact Mule-Hide Technical Department for job specific attachment requirements.

Insulation Adhesive - Insta-Stik by Dow Chemical Company or Weather-Tite by Millenium - Warranty Application must include a copy of the manufacturer's letter of acceptance for the project, including application rates for that specific project. Other Manufactures may be considered, submit request prior to bidding.

SHEET METAL

If the perimeter sheet metal is to be included in the Mule-Hide Warranty, it must be Mule-Hide Metal Accessories purchased from Mule-Hide or Anchor-Tite as manufactured by Metal-Era. Contractor to submit proof of purchase of Mule-Hide Metal Accessories. Contractor to provide proof of purchase and copy of Metal-Era Warranty for project.

MULE-HIDE PRODUCTS CO., INC.
10 or 15-Year Premium Warranty Enhancements
With Standard 55-MPH Wind Speed Coverage

NOTES:

1. **This is a summary of the Mule-Hide upgrade requirements for a 10 or 15 year Premium Warranty. Refer to Mule-Hide's Specification Manuals for complete specification and details.**

2. **The information contained in this document is general information. Requirements may be different for each specific job based on the conditions of each building. Always contact Mule-Hide Technical Department to review the specific job conditions prior to bidding the project.**

SECTION 3

MULE-HIDE PRODUCTS CO., INC.

TPO Ballasted Specification

TPO Ballasted Summary Specification

PLEASE CONSULT THE MULE-HIDE WEBSITE FOR THE MOST CURRENT INFORMATION AT WWW.MULEHIDE.COM

MULE-HIDE PRODUCTS CO., INC.
BALLASTED TPO SYSTEM
SPECIFICATION

07 54 00/MUL

TABLE OF CONTENTS

PLEASE CONSULT THE MULE-HIDE WEBSITE FOR THE MOST CURRENT INFORMATION AT WWW.MULEHIDE.COM

MULE-HIDE PRODUCTS CO., INC.
BALLASTED TPO SYSTEM SPECIFICATION

Revised: Nov 2014
07 54 00/MUL

PART 1 – GENERAL

1.01 Description

A. Scope:

1. Furnish and install a Ballasted TPO Roofing Membrane with flashings and accessories necessary to comprise a roofing system. The Mule-Hide TPO products and accessories shall be installed in strict compliance with current specifications and drawings as published by Mule-Hide Products Co., Inc. ("Mule-Hide").

2. The Mule-Hide Ballasted TPO (Thermoplastic Polyolefin) Membrane Roof System utilizes a 45-mil (.045 inch), 60-mil (.060 inch) or 80-mil (.080 inch) thick reinforced TPO sheet. The TPO membrane is loose laid over an acceptable substrate and ballasted. Adjoining sheets are overlapped a minimum of 3 inches and welded with a robotic welder. The field membrane is secured at all changes in plane greater than 2" per foot. A minimum of 10 lbs. per square foot (sf) of smooth river bottom stone is required as ballast. Note: All membrane thicknesses listed in this specification are nominal thicknesses.

B. Related Work:

The work includes, but is not necessarily limited to the installation of:

1. Vapor Retarder (where specified)
2. Wood Blocking (Nailers)
3. Insulation
4. Slip Sheet (where required)
5. Fasteners
6. Roof Membrane
7. Roof Membrane Flashings
8. Metal Flashings
9. Adhesives
10. Sealants
11. Walkways

Note: Mule-Hide recommends adherence to industry standards (SMACNA) for the installation of any metalwork.

1.02 Quality Assurance

A. The Mule-Hide Ballasted TPO Membrane Roofing System shall be installed by an independent roofing contractor eligible (Warranty Eligible) to apply for Mule-Hide "system warranties" when Standard System or Premium System Warranties are requested.

B. There shall be no deviations from this specification or the Mule-Hide Products Co., Inc. ("Mule-Hide") standard details without prior written approval from Mule-Hide's Warranty Department.

C. Upon completion of the installation according to the terms and conditions stated in this specification and in accordance to the information given in the Warranty Application and Pre-Job survey form and any additional approvals which might have been given by Mule-Hide, an authorized representative of Mule-Hide may perform an on-site inspection of the roof to verify that all installation and material requirements have been met.

Note: Inspections are only conducted on projects where a "System Warranty" is

requested. Inspections are not conducted on projects not requiring a Mule-Hide System Warranty or when only a "Roofing Membrane Limited Warranty" is requested. The sole purpose of an inspection by a Mule-Hide Representative is not to be a final inspection for the benefit of the Building Owner/Owner's Representative. It is for the benefit of Mule-Hide to determine if a warranty may be offered for the project.

D. Mule-Hide reserves the right to reject any roof system and refuse to issue any warranty on roofs which do not comply with Mule-Hide's specifications or current policies.

1.03 Submittals

A. Prior to the time of bidding, the roofing contractor shall submit to the Owner or Owner's representative the following items:

1. Copies of Mule-Hide specifications and published product data.
2. Samples of each material to be used in the roof system.
3. Specimen copy of Mule-Hide Products Co. warranty
4. Dimensioned shop drawings to include an outline of the roof and appropriate details for flashings and terminations.
5. Certification from insulation, roofing and accessory components manufacturers that all materials supplied comply with identified ASTM and industry standards.
6. Verification that system specifications meet all identified code and insurance requirements including but not limited to the following:

a. Factory Mutual Research Laboratories
Norwood, MA

b. Underwriters Laboratories
Northbrook, IL

Note: It is the Building Owner/Owner's Representative's responsibility to determine what submittals are required for the project.

B. Submit to Mule-Hide, prior to the job start, a Heat-Weld System Warranty Application to be reviewed by the Mule-Hide Warranty Department to determine the acceptability of the project based on the information provided.

1. The Heat-Weld System Warranty Application ("Warranty Application") must be completely filled out and should be accompanied with a copy of the written roof specification (if available). Also included should be any requests for deviations to Mule-Hide's standard published specification and details.

2. A roof drawing shall be submitted with the Warranty Application indicating all dimensions and locations of all penetrations.

1.04 Product Delivery, Storage and Handling

A. All products delivered to the job site shall be in their original unopened containers or wrappings and clearly labeled with the manufacturer's name, product identification and date of manufacture.

B. Protect all materials from damage during transit, storage and delivery to the job site. Place all materials on pallets and protect from moisture.

C. Store all materials in a dry, clean area protected from the elements. All rolls of membrane shall be stored flat on pallets.

D. All adhesive and caulking shall be stored at temperatures between 60°F and 80°F. Materials exposed to lower temperatures affect the workability and performance of the

product. Products shall be restored to the above temperature prior to use.

E. All flammable materials shall be stored in a cool, dry area away from open flames and sparks. Follow precautions outlined on containers or supplied by the material manufacturer/supplier.

F. All materials determined as being damaged (confirmed by Mule-Hide) due to improper storage on the job site are to be replaced with new materials.

1.05 Job Conditions

A. This specification shall not be considered applicable without the appropriate additional specifications approved by Mule-Hide if it should be determined that any of the following conditions exist:

1. The installation of any Mule-Hide Roof System is in a coastal area or high wind zone.

2. If the Mule-Hide Roof System should exceed the structural load conditions as determined by an architect or Engineer.

3. When chemical or hazardous materials are discharged onto the Mule-Hide Roof System.

B. Mule-Hide TPO roofing materials may be installed in temperatures below 40° F but only after consultation with the Mule-Hide Technical Department as special precautions or procedures may be necessary. The performance of the materials, installation costs and production rates may be affected.

C. The General Contractor or the building owner shall be responsible for providing adequate surfaces and structures to receive the insulation, Mule-Hide Roof System and related sheet metal necessary for the successful completion of the project.

D. Only as much new roofing as can be made watertight each day shall be installed each day. This includes all flashing work.

E. All substrates to receive new insulation, membrane or flashing shall be thoroughly dry. Should surface moisture occur, the contractor shall provide adequate equipment to dry the substrate prior to application of new materials.

F. Prior to and during application, all dirt, debris and dust shall be removed from surfaces to be roofed for both new and reroofing substrates.

G. On all projects where the Ballasted TPO system is specified, it is the responsibility of the independent roofing contractor to have the owner or owner's representative verify the condition of the deck or substrate and to confirm the roof deck can withstand the additional load.

H. Precautions shall be taken to prevent wind blow-off or wind damage during the course of the roofing application. This may necessitate additional securement of temporary construction, materials and equipment.

I. The contractor shall verify and ensure that all roof drain lines are unblocked before starting work. Any blockages found shall be reported to the owner's representative and Mule-Hide's Warranty Department in writing.

J. Temporary waterstops shall be installed at the end of each day's work. Temporary waterstops shall be removed at the start of the next day's work and disposed of properly. Waterstops shall be compatible with all materials.

K. Do not install the Mule-Hide TPO Roofing Membrane in direct contact with any product

containing coal tar pitch, creosote or penta-based materials. Consult the Mule-Hide Technical Service Department for special installation requirements.

L. Do not allow contaminants such as petroleum, grease, acid, solvents, vegetable or mineral oil, animal oil, animal fat, etc. or direct steam venting to come into direct contact with the Mule-Hide TPO Roofing Membrane. Contact the Mule-Hide Technical Service Department for recommendations if such conditions exist.

M. The contractor shall follow and comply with all safety regulations as recommended by OSHA.

N. All work shall be scheduled and executed without exposing interior building areas to the effects of inclement weather. The existing building and its contents shall be protected against all risks.

O. Arrange work sequence to avoid use of newly constructed roofing for storage, walking surfaces and equipment movement. Contractor shall provide all necessary protection and barriers to segregate the work areas and prevent damage to adjacent areas. If excessive traffic over newly installed membrane is necessary, contractor shall provide plywood or polyester felt protection to prevent damage. All damaged materials shall be replaced with new materials.

P. All existing roofing materials to be removed for construction shall be immediately removed from the construction site to a dumping area authorized to receive such debris. Any hazardous materials such as asbestos or materials containing asbestos fibers shall be removed and disposed of in accordance with applicable City, State and Federal requirements.

Q. Any unusual or concealed condition discovered during the course of the work is to be reported to the owner and Mule-Hide immediately in writing. Work is to be halted until the owner has responded with a solution to the problems.

R. All local building codes and requirements should be followed where applicable. It is the roofing contractor's sole responsibility to determine and ensure that the roofing system selected complies with all local codes and requirements.

S. Both interior and exterior building areas affected by construction shall be cleaned up and any damaged areas shall be repaired to the owner's satisfaction.

T. Certain project conditions may require modifications to this specification. Contact the Mule-Hide Warranty Department if any of the following conditions exist:

1. Roof heights greater than 60 feet.

2. Geographical location in a 100 mph or greater wind zone, per the ANSI 100 year mean recurrence interval wind isotach.

3. Location with a D exposure as determined in ANSI A58.1

U. When using heat-welding equipment, always review the equipment manufacturer’s instructions, precautions and warnings.

V. Consideration should be given in the project design to problems that can precipitate from the smooth surface characteristic of the Mule-Hide TPO membrane. The Ballasted TPO Roofing System shall not be installed where the slope of the roof exceeds an incline of 2 inches per foot. Pavers or other type of membrane protection should be installed in areas that are subject to routine foot traffic.

W. On all projects where the ballasted TPO system is specified, it is the responsibility of the independent roofing contractor to have the owner or owner's representative verify the

condition of the deck or substrate and to confirm the roof deck can withstand the additional load. A ballast waiver, signed by the building owner or owner's representative, or a copy of the project specification shall be submitted to Mule-Hide's Warranty Department with the warranty application.

1.06 Warranties

All Mule-Hide warranties are available for commercial projects. A Roofing Membrane Limited Warranty for a maximum of 10 years is available for residential projects.

A. Mule-Hide's Roofing Membrane Limited Warranty

Mule-Hide offers a 10, 15, or 20-year Roofing Membrane Limited Warranty ("Warranty") for a charge. The Warranty covers only the Mule-Hide TPO membrane (or portion thereof) determined by Mule-Hide to be defective and resulting in roof leaks. This Warranty does not cover workmanship or other components not supplied by Mule-Hide. Mule-Hide does not perform inspections of the installation before issuing the Roofing Membrane Limited Warranty. A Mule-Hide Warranty Application and the appropriate fee must be submitted to Mule-Hide to obtain this warranty. Proof of purchase may be required.

Note: Projects requesting a 20-year Roofing Membrane Limited Warranty require the use of a minimum 60-mil (.060 inch) thick TPO membrane and shall incorporate additional design enhancements as outlined in the 20-year Design Enhancements for TPO Ballasted Roofing System Specification. Mule-Hide recommends that Warranty Applications be submitted for review prior to bidding the project.

B. Mule-Hide's Standard System Warranty

Mule-Hide offers a 10, 15, or 20-year Standard System Warranty ("Standard") for commercial projects for a charge. The Standard warranty is a "No Dollar Limit", labor and material warranty that covers the Mule-Hide labeled membrane and other components supplied by Mule-Hide installed by a Mule-Hide Warranty Eligible Applicator. The Standard warranty does not cover insulation or its attachment system. Metal flashing components not supplied by Mule-Hide are not covered under this warranty. A Mule-Hide Warranty Eligible Applicator must submit a Warranty Application and the appropriate fee to Mule-Hide. Standard warranties require inspections by a Mule-Hide representative.

Note: Projects requesting a 20-year Standard System Warranty require the use of a minimum 60-mil thick TPO membrane and shall incorporate additional design enhancements as outlined in the 20-year Design Enhancements for TPO Ballasted Roofing System Specification. Mule-Hide recommends that Warranty Applications be submitted for review prior to bidding the project.

C. Mule-Hide Premium System Warranty

Mule-Hide offers a 10, 15, or 20-year Premium System Warranty ("Premium") for commercial projects for a charge. The Premium warranty is a "No Dollar Limit", labor and material warranty that covers the Mule-Hide labeled membrane, insulation, other components supplied by Mule-Hide and approved products (such as insulation adhesive or other pre-approved accessories) installed by a Mule-Hide Warranty Eligible Applicator. A Mule-Hide Warranty Eligible Applicator must submit a Warranty Application and the appropriate fee to Mule-Hide. Premium warranties require inspections by a Mule-Hide representative.

Note: Projects requesting a 20-year Premium Warranty require the use of a minimum 60-mil thick TPO membrane and shall incorporate additional design enhancements as outlined in the 20-year Design Enhancements for TPO Ballasted Roofing System Specification. Mule-Hide recommends that Warranty Applications be submitted for review prior to bidding the project.

D. Metal flashing products supplied by Mule-Hide (Mule-Hide Metal Accessories) and installed by a Mule-Hide Warranty Eligible Applicator will be covered under a Standard or Premium System warranty.

E. Standard and Premium System warranties are not available for residential projects.

F. TPO tie-ins to built-up (BUR) or any other type of roof system are not covered by Mule-Hide warranties.

G. Contact Mule-Hide for other extended warranties that may be available.

H. Terms and Conditions of Warranties

Mule-Hide's obligations under the Roofing Membrane Limited Warranty, the Standard System Warranty, and the Premium System Warranty are limited to the specific terms and conditions of the respective Warranties. Sample copies of the Mule-Hide Warranties are available from Mule-Hide upon request.

PART 2 - PRODUCTS

2.01 General

A. The components of the Ballasted Mule-Hide TPO Membrane Roofing System are to be products manufactured or supplied by Mule-Hide Products Co., Inc.

B. Components other than those supplied or manufactured by Mule-Hide may be submitted for review and acceptance by Mule-Hide's Warranty Department. Mule-Hide's acceptance of any other product is based solely on chemical compatibility and published performance data provided by the component manufacturer. Other components may be considered on a job-by-job basis and must be approved in writing by Mule-Hide's Warranty Department. Mule-Hide offers no warranty or guarantee for the performance or suitability of any component not supplied or manufactured by Mule-Hide.

2.02 Roofing Membrane

The Mule-Hide Reinforced TPO-c Membrane is available 45 mils (.045 inch), 60 mils (.060 inch) or 80 mils (.080 inch) thick. The Mule-Hide TPO-c membrane is a polyester scrim reinforced thermoplastic polyolefin roofing membrane that meets and exceeds the requirements of ASTM D6878 Standard Specification for Thermoplastic Polyolefin Based Sheet Roofing. Refer to the Product Data Sheets for physical properties and additional information.

2.03 Accessory Materials

The following Mule-Hide materials must be used to install Mule-Hide Roof Systems. Mule-Hide will not warrant any application where another manufacturer's product is substituted for a Mule-Hide product. **All products listed below are physically and chemically compatible with each other.**

A. Mule-Hide TPO Bonding Adhesive - A solvent-based rubberized adhesive used for bonding Mule-Hide TPO-c Membrane to various vertical substrates and insulation boards. Mule-Hide TPO Bonding Adhesive is a two-surface contact adhesive that is applied to both the underside of the membrane and substrate surface. This product may be used with TPO field membrane and flashing membrane. Adhesive is compatible with polyisocyanurate, wood fiberboard insulations, fiberglass-faced gypsum panels, concrete, masonry, metal and wood surfaces.

B. Mule-Hide Low VOC Bonding Adhesive - A high strength solvent-based contact adhesive that allows bonding of TPO membrane to various porous and non-porous substrates. It is specially formulated using a blend of VOC exempt and non-exempt solvents to meet the < 250 g/l VOC content requirements of the OTC Model Rule for Single Ply Roofing Adhesives.

C. Mule-Hide Low VOC Bonding Adhesive - 1168 – A high strength solvent-based contact adhesive that allows bonding of TPO membrane to various porous and non-porous substrates. It is specially formulated using a blend of VOC exempt and non-exempt solvents to meet the < 250 g/l VOC content requirements of the OTC Model Rule for Single Ply Roofing Adhesives. **This product COMPLIES with the following California counties' VOC regulations:** Alameda, Contra Costa, El Dorado, Los Angeles, Marin, Napa, Orange, Riverside, Sacramento, San Bernardino, San Diego, San Francisco, San Mateo, Santa Clara, Solano, Sonoma, and Tehama.

D. Mule-Hide WBBA-2000 – A water base adhesive used to bond Mule-Hide TPO-c membrane to various vertical substrates and insulation boards. WBBA-2000 is applied as a two-sided contact adhesive when used with standard (non-fleece back) TPO membranes, or as a single-side, wet lay-in adhesive when used with Mule-Hide Fleece Back TPO membrane.

E. Mule-Hide TPO Primer - A high-solids-content, clear (translucent color), polymer-based splice primer used to prepare TPO membrane for improved adhesion to pressure-sensitive TPO accessories such as: RUSS Strips, TPO Pressure Sensitive Cover Strips, Uncured Flashing Tapes and Cured Cover Tapes. Mule-Hide TPO Primer is required to prepare TPO membrane surfaces prior to the application of any pressure sensitive Mule-Hide accessories.

F. Mule-Hide Low VOC Primer - a solvent-based product designed to prepare TPO membrane for improved adhesion to pressure-sensitive TPO accessories such as: RUSS Strips, TPO Pressure Sensitive Cover Strips, Uncured Flashing Tapes and Cured Cover Tapes. This Low-VOC product is ideal for use in states where VOC content is a concern.

G. Mule-Hide TPO Flashing - a non-reinforced, .060-inch thick material primarily used to seal details where field fabrication is necessary, such as drain details, pipe flashings, pitch pocket flashings, seaming joints of the Mule-Hide TPO Coated Metal, and any place where reinforced membrane is not practical.

H. Mule-Hide TPO Universal Corners - .060-inch thick pre-molded, non-reinforced TPO material. They are uniform in shape and size and provide water tightness at corners formed by TPO coated metal and flashing membrane. They provide a neat, finished look to building corners, curbs and parapet flashings with no cutting or stretching required. Universal Corners are available in white only.

I. Mule-Hide TPO Outside Corners – are pre-molded and are used for flashing outside corners on a variety of details. Installation is fast and easy with no cutting or stretching required. TPO Outside Corners are available in white, gray, and tan.

J. Mule-Hide TPO Inside Corners – are pre-molded and are used for flashing inside corners on a variety of details. Installation is fast and easy with no cutting or stretching required. TPO Inside Corners are available in white, gray, and tan.

K. Mule-Hide Weathered Membrane Cleaner - Used to clean in-service TPO-c membrane prior to the welding process. This cleaner helps to loosen and remove dirt and other contaminants from the surface of the TPO-c membranes and leaves a suitable surface for welding or the subsequent application of TPO Primer.

L. Mule-Hide TPO Pipe Seal - An injection molded, pre-formed flashing for pipes made of Mule-Hide non-reinforced TPO material. They are designed to add ease to the installation process while offering increased watertight security and improved aesthetics. TPO Pipe Seals are designed as an economical flashing for single pipe penetrations on Mule-Hide TPO-c Membrane roof systems. The TPO Pipe Seals can be used wherever the TPO Pipe Seals may be slipped over the top of the pipe.

M. Mule-Hide TPO T-Joint Cover - 60-mil non-reinforced flashing cut into a 4.5” diameter circle used to seal step-offs at splice intersections. Installation is mandatory on all 60-mil and 80-mil TPO systems and on all jobs warranted longer than 15 years.

N. Mule-Hide TPO Coated Metal – 24-gauge, galvanized steel to which is laminated 35 mils (.035" thick) of Mule-Hide non-reinforced TPO Membrane used for flashing and edge metal detailing.

O. Mule-Hide All-Purpose Bar ("A-P Bar") - an extruded aluminum bar, 50 mils (.050") thick, used to terminate adhered reinforced membrane vertical flashings in certain constructions. Mule-Hide A-P Bar may also be used to anchor the field sheet at the base of vertical angle changes.

P. Membrane Fasteners and Discs - Mule-Hide offers a variety of membrane fasteners and discs to meet specific job conditions and substrates.

Q. Mule-Hide Thermoplastic Pourable Sealant - a one-component thermoplastic sealant for use in pitch pockets.

R. Mule-Hide TPO .045 Reinforced 6” X 100’ – used for stripping-in TPO Coated Metal and as cover strips over TPO Coated Metal joints.

S. Mule-Hide TPO Cut Edge Sealant – A solvent-based liquid sealant used to seal the cut edge of the Mule-Hide TPO Membrane.

T. Mule-Hide TPO Walkway Rolls – a 1/8-inch thick embossed TPO membrane available in rolls (34" x 50’) having a herringbone traction surface. Walkway Rolls are trimmed in safety yellow along the length of the sheet to better define the walkway area. Walkway Rolls may be welded directly to the TPO roofing membrane. The yellow edges are smooth without safety lugs to allow for easier welding. Walkway Rolls are available in White and Gray colors.

U. Mule-Hide Insulation - Mule-Hide Poly ISO polyisocyanurate insulation (flat or tapered) is a closed-cell polyisocyanurate foam core laminated to heavy, black (non-asphaltic) glass fiber reinforced felt facers.

V. Mule-Hide HP Protective Mat - A nominal 6.0-ounce per square yard (140 grams per square meter) UV resistant polypropylene needle punched fabric. It can be used above the membrane as a slipsheet for crushed stone or pavers on ballasted system applications.

2.04 Related Materials By Others

A. Wood Nailers

1. Nailers shall be #2 or better lumber. Creosote and asphaltic preservatives are not acceptable. Pressure treated lumber is not required on new construction unless specified by the architect.

2. Wood nailers shall conform to Factory Mutual's Loss Prevention Data Sheet 1-49.

3. Wood nailers shall be installed as specified on the project drawings and shall be of a height sufficient to match the thickness of the insulation being used.

B. Vapor Retarders

1. Vapor retarders shall meet specified codes and insurance requirements.

2. Vapor retarders shall be compatible with insulation and other accessories.

3. The use and placement of a vapor retarder should be determined by an architect or engineer. Mule-Hide does not require the use of vapor retarders. However, Mule-Hide recommends that a vapor retarder be considered when both of two conditions are anticipated:

   a. The outside average January temperature is below 40°F, and

   b. The expected interior winter relative humidity is 45% or greater.

4. Mule-Hide must be contacted for buildings that are refrigerated (freezers or cold storage) or have a high interior humidity such as, but not limited to, swimming pools, produce storage or locker rooms.

C. Insulation

1. Insulation shall be installed as a protection layer over the existing substrate or to obtain a desired thermal value.

2. Insulation shall be compatible with the Mule-Hide TPO Membranes, Mule-Hide Adhesives, Mule-Hide TPO Flashings and other Mule-Hide Accessories.

3. The following insulation boards are acceptable for use with a ballasted roofing system when a standard warranty is requested:

   a. Polyisocyanurate insulations having non-asphaltic facers (foil facers are not acceptable) meeting the physical property requirements of Fed. Spec HH-I-1972 and having a minimum compressive resistance of 18 psi. Thickness minimum is 1.0" or greater as required by insulation manufacturer to span steel deck flutes.

   b. High Density Wood Fiberboard - may be used as an overlay over other insulations. 1/2-inch thick is the minimum requirement when used as an overlay. Mule-Hide requires a minimum 1-inch thick board when installing directly over steel decks. Wood and concrete decks require a minimum 1/2-inch thick board. Minimum thicknesses and attachment rates will vary with wind requirements and deck types.

   c. Expanded Polystyrene. Density of boards must be 1.0 PCF certified minimum and meeting ASTM C578, Type II physical properties. Minimum thickness shall be 1.0 inch. When installing directly over a steel deck the minimum thickness shall be as required by insulation manufacturer to span flutes. Check local building codes as a layer of gypsum board may be required under the EPS insulation (on steel decks).

   d. Extruded polystyrene meeting ASTM C578, Types IV, VI or VII physical properties. Minimum thickness shall be as required by insulation manufacturer to span steel deck flutes.

   e. Perlite Insulation – Perlite is not an acceptable insulation. Perlite may only be used as fill insulation under an approved insulation. The TPO membrane cannot be adhered directly to perlite insulation.

   f. Dens Deck Prime or Securock - A minimum 1/4" thick layer of Dens Deck Prime or Securock may be used as an overlay over an approved insulation or as a thermal barrier over a combustible deck.

   g. State and local building codes should be reviewed regarding the installation of expanded or extruded polystyrene insulation directly over a steel deck.

4. Insulation manufacturer shall provide its recommendations for use and attachment to the owner with a copy sent to Mule-Hide's Warranty Department. In addition, the insulation manufacturer shall provide a copy of their specific warranty conditions.

5. Mule-Hide Premium Warranties require the use of the Mule-Hide labeled insulation or insulation by an approved Mule-Hide manufacturer. Use of other insulations may disqualify the project for consideration of the issuance of a Premium warranty. Contact the Mule-Hide Technical Service Department for specific requirements.

D. UL and FM Approved Assemblies

1. Contact Mule-Hide Technical Department for proper insulated assemblies when projects require compliance with UL or FM requirements. The components may change with the slope, deck type and classification requested.

E. Sheet Metal

1. Metal flashing products supplied by Mule-Hide (Mule-Hide Metal Accessories) and installed by a Mule-Hide Warranty Eligible Applicator will be covered under a Standard or Premium System warranty.

2. TPO Coated Metal and non-coated metal components such as gravel stops, drip aprons, counterflashings, copings, etc., should be fabricated and installed in accordance ES-1 recommendations and requirements.

3. Sheet metal components supplied by others are not covered by the Mule-Hide warranties. Contact Mule-Hide's Technical Department for specific requirements.

F. Ballast Types

1. **Rounded Water-Worn Gravel** may be placed directly on the TPO membrane without additional membrane protection.

a. Minimum acceptable gradation:

1. Nominal 1-1/2" rounded water worn gravel which conforms to the following gradation: 50% retained by a 3/4" screen, 95% retained by a 1/2" screen and 98% retained by a 1/4" screen. Use ASTM C136 method for sizing gravel.

2. Alternately, #4, #3 and #24 stone (sized in accordance with ASTM D448 method of sizing) may be used in lieu of the stone listed above.

3. Coverage rate shall be no less than 1000 pounds per 100 square feet and ballast must be evenly distributed to maintain an average of 10 pounds per square foot.

4. Nominal 2-1/2" rounded water worn gravel which conforms to gradation #1 or #2 when sized in accordance with ASTM D448 method of sizing. Coverage rate shall be no less than 1300 pounds per 100 square feet and gravel must be evenly distributed to maintain an average of 13 pounds per square foot.

b. **Standard sizes of coarse aggregate** - Based on ASTM D448

Size Number	1	2	24	3	4
Nominal Size Square Openings	3-½" – 1-½"	2-½" – 1-½"	2-½" – ¾"	2" – 1"	1-½" – ¾"
Amounts Passing Each Lab Sieve (Square Opening), Percent (%)					
4"	100				
3-½"	90 to 100				
3"		100	100		
2-½"	25 to 60	90 to 100	90 to 100	100	
2"		35 to 70		90 to 100	100
1-½"	0 to 15	0 to 15	25 to 60	35 to 70	90 to 100
1"				0 to 15	20 to 55
¾"	0 to 5	0 to 5	0 to 10		0 to 15
½"			0 to 5	0 to 5	
3/8"					0 to 5

2. **Crushed Stone,** when specified, shall conform to the gradations approved for rounded water-worn gravel and must be installed in conjunction with Mule-Hide HP Protective Mat.

   a. HP Protective Mat must extend a minimum of 2" above the crushed stone at the perimeter and penetrations, but must be discontinued at scuppers, Dutch gutters and at drain bases.

   b. A minimum 6" overlap between adjacent sheets of HP Protective Mat must be specified.

3. **Individual Concrete Pavers**

   a. Individual pavers with a minimum weight of 18 pounds per square foot may be substituted for nominal 1-1/2" stone. Individual pavers with a minimum weight of 22 pounds per square foot may be substituted for nominal 2-1/2" stone.

   b. Individual pavers must be a maximum of two feet square. Unless otherwise required by Mule-Hide, pavers must weigh no more than 80 pounds per unit to allow for easy removal and replacement.

   c. Individual pavers with a surface other than a steel troweled finish as approved by Mule-Hide, must be installed over Mule-Hide HP Protective Mat and must be accepted by Mule-Hide prior to installation.

   d. Elevating pavers should increase life expectancy, reduce freeze/thaw effects and promote more positive drainage. Acceptable pedestals can be specified under corners of pavers to elevate paver.

   e. Individual concrete pavers shall be loose laid and butted together with no gaps greater than 1/2".

4. **Lightweight Interlocking Concrete Pavers**

   a. Depending on the type of lightweight interlocking system, Mule-Hide HP Protective Mat or manufacturer's recommended matting may be required by Mule-Hide as a protection layer for the membrane. **Mule-Hide's Technical Department must be consulted prior to installation concerning protective matting requirements.**

b. Lightweight interlocking pavers (minimum 10 pounds per square foot) may be substituted for nominal 1-1/2" stone or nominal 2-1/2" stone.

c. When lightweight interlocking pavers are specified, the respective paver manufacturer must be consulted concerning installation criteria.

CAUTION: The securement method suggested by the respective interlocking paver manufacturer must be reviewed by Mule-Hide to determine membrane accessibility. If access to the membrane system is impaired by the paver interlocking mechanism (mechanical clips, strapping, adhesive, etc.), the building owner must assume the responsibility of providing access to the membrane for the purpose of investigation and warranty related repairs.

d. Lightweight Ballast Paver – 2" x 2" x 1.25" weighing 15 lbs/sq. ft.

2.05 Precautions

A. Consult Material Safety Data Sheets and container labels for specific safety instructions prior to use.

B. Avoid breathing vapors of solvents, cleaners, primers, sealants and adhesives. Use with adequate ventilation. Avoid prolonged contact of solvents, sealants, cleaners, primers and adhesives with skin. Solvent resistant rubber gloves should always be worn during use.

C. Do not use Mule-Hide TPO roofing products near fire or flame. Do not use open flames for drying of surfaces, sealants or adhesives. **Do not smoke near flammable products.**

D. Do not use oil-based paint on TPO Coated Metal or membrane. Contact Mule-Hide's Technical Service Department for recommendations for compatible color coatings.

E. Do not allow muriatic acid (masonry cleaner) to come in direct contact with the Mule-Hide TPO membrane or accessory products.

F. Do not allow Mule-Hide TPO membranes or accessories to come into direct contact with steam or vents that produce temperatures in excess of 160°F (71°C).

G. The Mule-Hide TPO Roof System may be installed in cold weather provided the adhesives are stored at room temperature until just prior to use and used within 2 hours. Adhesives left in the cold must be returned to room temperature prior to use.

H. Cover Tapes may lose tack when exposed to temperatures below 40° F. for extended periods of time. A heat gun may be used to warm the product. Only apply heat to the TPO side. Be careful not to over heat. Hot boxes are the preferred method to warm tapes.

I. In colder temperatures when the ambient temperature is near the dew point, condensation may form on the tape primer and adhesive as the solvents flash off. If condensation occurs, discontinue the application and allow the surface to dry. **Do not attempt to dry the surface with heat guns or torches.** When weather permits apply a new coat of product.

PART 3 - EXECUTION

3.01 General

A. When installing a Ballasted Mule-Hide Reinforced TPO Membrane Roofing System in cooler weather, it is recommended that liquids such as solvents, sealants, etc. be stored at warmer temperatures (60°F or more but not exceeding 80°F) until just prior to use in

order to facilitate the installation.

3.02 Substrate Conditions

The following general conditions apply to the substrate that will receive a Mule-Hide Ballasted TPO Membrane Roofing System for recover, reroof and new construction:

A. The roof deck must be structurally sound to provide proper securement for mechanical fasteners and strong enough to withstand the load of a ballasted roofing system. Areas showing a loss of integrity due to corrosion, rotting, warping, concrete spalling, etc., must be repaired or replaced prior to installing the roofing system. It is the responsibility of the independent roofing contractor to have the owner or owner's representative verify the condition of the deck or substrate and to confirm the roof deck can withstand the additional load.

B. It is the responsibility of the roofing contractor to perform test cuts at each roof area prior to reroofing. The condition of the substrate must be suitable to receive a Ballasted Mule-Hide TPO Roofing System. Wet insulation must be removed and replaced. See Single Ply Roofing Institute's guidelines for determining wet insulation.

C. Contact the material manufacturer when the substrate is exposed to excessively high humidity and/or a corrosive environment. Special fasteners (i.e.- stainless steel) or details may be required.

D. A determination must be made regarding the presence or absence of coal tar pitch within the existing roof assembly when considering a recover of the old roof system. The presence of coal tar pitch requires the use of a 6-mil poly slipsheet under the insulation unless the coal tar pitch is 10 years or older and is separated from the Mule-Hide TPO membrane by a layer of insulation a minimum of 1-1/2" thick having a minimum "R" value of 5.0. All joints must be butted tightly together or have joints completely taped to prevent volatiles from damaging roof membrane.

E. It is acceptable to install a Ballasted Mule-Hide TPO Membrane Roofing System over the following deck substrates provided that an acceptable insulation is installed over the substrate as required and the building owner/owner’s representative has confirmed the additional weight of the ballasted roof system shall not exceed the design load limits of the roof deck:

1. Structural Metal Deck (22 gauge minimum) shall conform to recommendations outlined in Factory Mutual's Loss Prevention Data Sheet 1-28 (requires insulation). Contact Mule-Hide's Warranty Department for attachment requirements for decks less than 22-gauge in thickness. All FM testing is based on attachment to a 22-gauge steel deck.

2. Structural Concrete, pre-cast and pre-stressed concrete (3,000 p.s.i. minimum) shall be cured and dry to industry standards and surface shall be smooth, clean and free of moisture or frost. All sharp ridges or other projections above the surface shall be removed before roofing. An approved insulation board is recommended. Minimum deck thickness shall be 2 inches with 3 inches preferred due to possible spalling damage that may occur to the underside of the deck when using fasteners for membrane attachment.

3. Lightweight Insulating Concrete Fill and Metal Form work (minimum 24 gauge metal form work) - the roof deck shall be cured and dry to the deck manufacturer's and/or industry standards and shall be smooth and free of ridges and depressions. All necessary venting as recommended by the roof deck manufacturer shall be accomplished. Any membrane attachment must be through the insulating concrete into the steel or concrete deck. Insulation board is required. Vapor barriers may be required when installing insulation over new decks.

4. Wood Plank (1" minimum) shall conform to Factory Mutual's requirements for Class 1 impregnated decks (insulation is required). FM approved wood decks are a minimum, nominal 2-inch thick, tongue and groove planks.

5. Plywood (15/32" minimum) shall be exterior grade (minimum CDX grade). A layer of an approved insulation is required for reroof applications. Decks attached with common or cement coated nails or staples shall be covered with an approved insulation.

6. Cementitious Wood Fiber Decks - Certain cementitious wood fiber decks may be acceptable upon confirmation that the new roof system shall not exceed the design load limits of the roof deck and support structure.

7. Gypsum Concrete Deck - shall be cured and dry to manufacturers' and/or industry standards. The surface of the deck shall be smooth and free from ridges and depressions. Certain gypsum concrete decks may be acceptable upon confirmation that the new roof system shall not exceed the design load limits of the roof deck and support structure.

F. For reroofing projects having plywood decks, a minimum of one layer of an approved insulation is required after the tear-off has been completed.

G. Mule-Hide recommends that all roof surfaces have a positive slope to provide adequate drainage. There should not be any ponding water 48 hours after a rainfall.

3.03 Preparation Of Existing Substrate

A. General

1. To prevent delays or interruptions, coordinate work with other trades or suppliers to ensure that components to be incorporated into the Ballasted Mule-Hide TPO Membrane Roofing System are available as the work progresses. Examine substrates to which the roofing materials are to be applied to ensure that their condition is satisfactory for the Mule-Hide TPO Membrane Roofing System application.

2. Do not permit voids greater than 1/4" wide in the substrate. Concrete substrates shall be cured and free of laitance and curing compounds. Substrates for roofing materials shall be dry and free of oil, dirt, grease, sharp edges and debris. Inspect substrates and correct defects before application of roofing membrane.

3. Specifier or roofing contractor shall determine the condition of the existing roof deck and roofing system. Areas with deteriorated decking, wet insulation or other failed materials shall have those affected materials removed and replaced. Make sure all decking is securely fastened. The roofing contractor has the final responsibility to ensure an acceptable deck is provided to receive the new roof system.

4. Large blisters shall be cut and patched to provide a reasonably level substrate surface.

5. On recover projects, tear off all existing base flashings, cant strips and projection flashings down to the substrate. The flashing substrate shall be dry and free of oil, dirt, grease, sharp edges and debris.

6. Gravel over existing nailers must be totally removed prior to installing new nailers and flashings. Verify that the existing nailers are in good condition and securely anchored to the roof decks.

7. When an additional thickness of insulation is being added, new nailers must be

added to match the height of the new insulation. Nailers must be securely anchored to the roof deck per Section 3.05 of this specification.

8. All roof surfaces shall be free of ponded water, ice, or snow. Significant ponding that remains after a period of 48 hours should be eliminated by either installing tapered insulation to create positive drainage of the roof surface or by installing new drains in the low areas where the ponding remains. Positive drainage shall also eliminate the possibility of excessive live loads caused by ponding water that could cause structural damage or failure.

9. When removing an existing roof during reroofing, remove only that amount of roofing and flashing that can be made watertight with new Mule-Hide TPO materials in a one-day period or prior to the onset of inclement weather.

10. Recovering over a gravel surfaced BUR systems require the installation of an acceptable insulation. Loose gravel must be removed. All lead pipe and drain flashings shall be removed.

11. Recovering over a smooth surfaced BUR and smooth Modified Bitumen roofing systems shall require the installation of an acceptable insulation. All lead pipe and drain flashings shall be removed. Single-ply membranes such as EPDM, Hypalon, PVC or CPA must have all existing flashings removed, the field sheet must be cut up into sections no larger than 10' by 10' and an acceptable layer of insulation shall be installed over the existing field membrane.

12. Polyurethane Foam roofing systems ("PUF") are not acceptable for recover applications. The PUF system must be completely removed and new insulation installed prior to the installation of the new TPO Roofing System.

13. If a Mule-Hide Premium warranty is requested, the existing roof system **must be removed to the deck** prior to the installation of the new roofing system or a moisture survey by an independent third party must be taken, all wet areas removed and a copy of the survey submitted to Mule-Hide with the warranty application.

3.04 Vapor Retarder Installation (where specified)

A. Specific climatic and job conditions may require the use of a vapor retarder. It is the sole responsibility of the design professional to determine the need for a vapor retarder, and its type and location in the roofing system. A vapor retarder may often act as an "air barrier" which may have a positive effect in reducing internal air pressure. Vapor retarders should be strongly considered for buildings subject to high internal air pressures such as airplane hangars and buildings with many loading bays such as warehouse facilities.

B. The National Roofing Contractor's Association recommends the installation of vapor retarders when interior relative humidity is 45% or greater and the outside mean average January temperature is below 40° F.

C. Install a vapor retarder over a suitable substrate with all side and end laps and all penetrations sealed in accordance with the manufacturer's instructions. The vapor retarder may be loosely laid or adhered with the manufacturer's recommended adhesive. In reroofing where the existing built-up roof is to remain, the built-up roof may be an adequate vapor retarder as long as all splits or tears are repaired in order to provide a total barrier to vapor penetration.

3.05 Wood Nailers

A. Wood nailers are required at all roof perimeter edges where metal edging and gutter systems are specified or where indicated in Mule-Hide's published Standard TPO Details.

B. Nailers shall be firmly anchored to the decks at a maximum 2'-0" o.c. and shall resist a pullout force of 200 lbs./linear foot in any direction. A 1/2" vent space shall be provided between adjacent lengths of nailers. Fasteners shall be installed within 6 inches of each end. Spacing and fastener embedment shall conform to Factory Mutual Loss Prevention Data Sheet 1-49.

C. Height of nailers shall match the surface level of the insulation and roof membrane. The width of the wood nailer shall extend beyond the metal flange to prevent damage to the membrane.

D. All woodwork to be reused shall resist a minimum force of 200 lbs/linear foot in any direction and shall be free of rot.

E. Wood nailers with creosote and asphaltic preservatives are not acceptable. Pressure treated lumber is not required on new construction unless specified by the architect.

3.06 Insulation Installation

A. Mule-Hide accepted roof insulations shall be installed in accordance with Mule-Hide specifications.

B. Mule-Hide accepted roof insulations shall be loose laid to the deck in accordance with Mule-Hide's requirements.

C. All roof insulation shall be neatly cut to fit around all penetrations and projections with a maximum allowable gap of 1/4-inch.

D. Open joints shall be repaired with like insulation material.

E. Insulation shall be feathered or tapered to provide a minimum sump area of 36" x 36" where possible at all drains. Crickets and saddles may be installed beneath the specified insulation where possible. Crickets and saddles made from non-compatible insulations materials must be overlaid with an acceptable insulation or underlayment.

F. Install no more roof insulation in one day than can be covered with the Mule-Hide TPO Membrane or when the onset of inclement weather is anticipated.

G. Insulation installed over steel decks shall be checked so that no edges are left unsupported along the flutes. All insulations shall be of sufficient thickness and density to prevent breakage under normal roof construction traffic.

H. When installing insulation, the end joints of each row of insulation shall be offset against the previous row. When more than one layer of insulation is to be used, succeeding layers are to be laid staggered in relation to the previous layer of insulation and all joints shall be offset.

I. When a Mule-Hide Premium Warranty is requested, only Mule-Hide labeled insulation may be used unless written approval is obtained, prior to job bid, for an alternative insulation.

J. Insulation other than Mule-Hide labeled insulation must be an FM approved insulation and acceptable to Mule-Hide for use under the Mule-Hide Ballasted Roofing System. Refer to the insulation manufacturers guidelines for the appropriate type, size and thickness of the insulation needed for use over the respective substrate and under the Mule-Hide Ballasted Roofing System.

K. Mule-Hide does not require the insulation to be attached to the roof deck.

L. Mule-Hide does not permit mechanical attachment of the top layer of insulation when installing a ballasted system. Contact Mule-Hide for alternative methods of attachment

when insulation attachment is required by the specifier. Should mechanical attachment of the insulation be required by the specifier, an additional layer of insulation must be installed over the plates and fasteners. Contact Mule-Hide Technical Department for recommendations.

3.07 Membrane Installation

A. General - Unroll the Mule-Hide TPO Membrane and position without stretching. Allow the membrane to relax at least 15 minutes when the temperature is above 60°F, or 30 minutes when the temperature is below 60°F, prior to installation. Inspect and remove any damaged membrane.

B. Membrane should run perpendicular to the direction of steel deck flutes and orientation of wood decks where possible.

C. All membrane overlaps shall be installed to facilitate the flow of water. Seams shall be shingled or run parallel to the flow of water. Backwater seams are not permitted.

D. Lap sheets a minimum of 3 inches to provide space for a continuous, minimum 2” weld. Membrane overlaps shall be shingled with the flow of water or parallel to the flow of water. All welded field seams shall be a minimum of 2 inches wide. End laps shall be overlapped a minimum of 3 inches.

E. The roofing contractor shall check all welded seams for continuity and integrity using a cotter pin puller or other suitable blunt object. The contractor shall make sample test seams each day prior to welding field seams. The contractor shall, using scrap material, run at least two test seams, each a minimum of 2' long. Each test seam shall be used to determine adequate seam strength and to ensure the equipment has warmed up, is operating properly and proper settings have been determined. This should be done each time the equipment is turned on after a cool down period.

F. Perimeter - When installing the Mule-Hide Ballasted TPO Roofing membrane system, it is not necessary to install Half Sheets parallel with the perimeter. Full size sheets should be used everywhere practical to minimize the number of field seams. In place of Half Sheets, additional ballast is installed as defined in 3.08.B.5 Ballast Criteria (perimeter enhancement). Weld all laps (seams and end laps) continuously with a minimum weld width of 2 inches. All field welds shall be completed with an automatic welder.

3.08 Field Sheet Attachment

A. Ballasting - General

1. Use of temporary ballast to prevent wind uplift is the responsibility of the Roofing Applicator. For immediate protection against wind uplift, Mule-Hide requires ballast to be installed as each section of the installation is completed.

2. Care must be exercised during application of gravel or pavers. Heavily traveled areas during ballast installation must be protected by placing temporary protection courses to prevent possible damage to the TPO deck membrane and insulation.

3. Factory Mutual does not test ballasted single-ply roofing systems. FM 1-60 and FM 1-90 ratings are not available. Mule-Hide recommends following the “Wind Design Guide for Ballasted Single-Ply Roofing Systems” as jointly published by the RMA and SPRI.

B. Field Sheet Attachment (Ballast Requirements)

The coverage rates listed in this section are considered minimum and are required by Mule-Hide for issuance of the standard Mule-Hide warranty. Depending on specific project conditions (building height, parapet height and project location), additional ballast

may be necessary to provide wind uplift protection. Comply with the specifier's requirements when an additional ballast coverage rate is specified.

1. **Rounded Water-Worn Gravel** must be applied over the TPO membrane at the minimum rate of 1000 pounds per square and must be evenly distributed to maintain an average of 10 pounds per square foot.

ASTM D 448 SIZE NUMBER	MINIMUM COVERAGE RATE (pounds per square)	AVERAGE COVER RATE (lbs/sq. ft. continuously distributed)
4 (1-½" nominal diameter)	1000	10
3 (2" nominal diameter)	1000	10
24 (2-½" nominal diameter)	1000	10
2 (2-½" nominal diameter)	1300	13
1 (3-½" nominal diameter)	1300	13

Notes: In the field of the roof, some bare spots resulting from installation are permitted; however, they must not exceed 64 square inches and must be limited to no more than 2 per square (100 square feet). No bare spots are permitted in the perimeter area of the roof that is 10' wide.

2. **Crushed Stone** must be applied in conjunction with Mule-Hide HP Protective Mat placed over the TPO membrane. The crushed stone must be applied at the minimum rate of 1000 pounds per square and must be evenly distributed to maintain an average of 10 pounds per square foot.

3. **Smooth Surfaced Individual Concrete Pavers** or **Lightweight Interlocking Concrete Pavers**

   a. Lightweight interlocking pavers and individual concrete pavers with a surface other than steel troweled finish must be installed over Mule-Hide HP Protective Mat. Contact Mule-Hide for verification of acceptable pavers.

   b. **Individual Concrete Pavers,** when specified, must be installed loose laid and butted with no gaps greater than 1/2".

   Note: Do not install pavers heavier than 80 pounds per unit unless approved in writing by Mule-Hide

   c. Lightweight Interlocking Concrete Pavers, when specified, must be installed in accordance with the respective manufacturer's specification and as approved by Mule-Hide prior to installation.

4. Placement of Mule-Hide HP Protective Mat

   a. When specified or required by Mule-Hide, position Mule-Hide HP Protective Mat loosely over the membrane with all edges overlapped a minimum of 6".

   b. Extend the mat a minimum of 2" above the anticipated ballast level at the perimeter and around penetrations except for roof drains and scuppers.

   c. The mat must extend to drain bases, scupper openings and the base of Dutch gutters but must not restrict drainage.

   d. Additional matting must be installed around penetrations to prevent direct contact between crushed stone or pavers and flashing.

   Note: Following the placement of the fabric, it is necessary to install the ballast or temporary ballast to prevent the movement or displacement of unballasted

fabric.

5. Ballast Criteria (perimeter enhancement)

a. Stone Ballast

Building Height	Ballast Requirements
Up to 25'	#2 Stone @ 13#/SF for 10' wide perimeter #4 Stone @ 10#/SF for field of roof
26' to 50'	#2 Stone @ 13#/SF for 20' corners #2 Stone @ 13#/SF for 10' wide perimeter #4 Stone @ 10#/SF for field of roof
Over 50'	Mule-Hide recommends the use of a interlocking ballast paver system

b. Concrete Pavers

1. Minimum Size: 2’ x 2’ x 2”
2. Minimum Weight: 22 pounds per square foot
3. Membrane Protection: Rubber or plastic pedestals, or 4” x 4” sections of Mule-Hide Walkway Pads.
4. Paver type must be submitted to Mule-Hide for approval prior to bid.

C. Do not run any seams through field drains or sumps. Any seams running through drains or shall be cut out and target patches (36” x 36”) shall be installed.

3.09 Welding of Lap Areas

A. General

1. Roofing membrane is to be hot air welded only. Seaming of "membrane to membrane" and "flashing/detail membrane to membrane" shall be by hot air welding only.

2. All surfaces to be welded shall be clean and dry.

B. Hot Air Welding

1. Machines for hot air welding are available from several different sources. Each manufacturer's instructions for use shall be followed, as well as all local codes regarding electric grounding, supply and other related functions. Since most automatic welding machines require 218 to 230 volts, the use of a portable generator on the roof is recommended for greater flexibility. **Mule-Hide requires the use of automatic welding machines for all field sheet seaming. Hand welding is only acceptable for flashings and those seams where the automatic welder cannot be used.**

2. Hand-held welding equipment is also available to weld membrane. After the preheated nozzle tip is applied in the overlap area and the material starts to soften, immediately follow with a silicone hand roller to press the heated membrane surfaces together with slow, even movements. Keep the roller within 1 inch of the nozzle tip. Angle the hot air tool so that the flowing air faces the roller. Seam strength may be tested when cool. For best results, testing seams 8 hours after hot air welding is recommended.

C. “T” Joint Covers

1. **For 45-mil membrane and maximum warranty length of 15-years.** Pay special attention to the “T” lap seams formed where three layers of membrane

overlap at a seam. To ensure proper seaming of the “T” joints, the top layer of the Heat-Weld Membrane is creased a minimum of one inch into the lower layer of membrane by using a heat gun with a narrow or pencil tip nozzle and a rubber hand roller. By inserting a heat gun nozzle between the layers of the membrane, the membrane will soften and begin to flow allowing it to crease and seal completely after applying pressure with a hand roller to ensure adequate bonding of the softened material. After heat-sealing the “T” joint, Edge Sealant must be applied on all cut edges of reinforced membrane. See detail MHT-UN-105A

2. **For membrane thickness greater than 45-mil or warranty length greater than 15-years.** Separate “T” joint patches are required over all “T” joints. See detail MHT-UN-105B

D. Seam Patches at Roof/Wall Transitions

1. Mule-Hide requires the installation of Non-Reinforced TPO Flashing Membrane patches over any seam that transitions from the horizontal to the vertical. These patches are to be constructed with Non-Reinforced TPO Flashing Membrane only and hot air welded. Refer to Mule-Hide Detail MHT-UN-105C.

E. Daily Welding Equipment Setup

1. The roofing contractor shall make sample test seams each day prior to welding field seams. The contractor shall, using scrap material, run at least two test seams, each a minimum of 2 feet long. Each test seam shall be used to determine adequate seam strength and to ensure the equipment has warmed up, is operating properly and proper settings have been determined. This should be done each time the equipment is turned on after a cool down period.

F. Quality Control of Seams

1. After seaming, the seams are checked for integrity with a probe. Any openings or "fishmouths" are to be repaired with a hand-held hot air tool fitted with a narrow nozzle tip and with a roller. Each day the contractor shall attempt to pull apart several sections of welded seams to test the quality of the welds. Should the welds be deficient, a more thorough examination of the work performed must be carried out and necessary repairs made.

3.10 Additional Membrane Securement (Base Attachment)

A. Additional securement of the TPO membrane by mechanical attachment must be provided at the perimeter of each roof level, base of walls, curbs, skylights, expansion joints, tie-ins, interior walls, bottom of valleys and any angle changes that exceed inclines of 2:12 (2” rise in 12”) and various penetrations as shown in the Mule-Hide Standard Details. All securement must be either horizontally to the roof deck or vertically to the base of the various penetrations as shown in the Mule-Hide Standard Details.

B. The mechanical attachment of the membrane may be achieved by the following methods:

1. 2.4” Seam Plate and appropriate fasteners through the membrane

a. The 2.4” Seam Plate and appropriate fasteners are placed with the edge of the Seam Plate approximately ½” away from the angle change. Seam Plates may be placed either horizontally or vertically depending on the conditions encountered. Refer to the Mule-Hide TPO Standard Details for proper placement.

2. Mule-Hide All Purpose Bar

a. The Mule-Hide All Purpose Bar is a specially extruded aluminum bar that

has pre-punched holes 6 inches on center. Bar may be placed either horizontally or vertically depending on the detail followed. Refer to the Mule-Hide TPO Standard Details for the proper placement. Refer to Mule-Hide Detail # MHT-UN-330 appropriate placement of the All Purpose Bar.

b. The maximum spacing of the fasteners shall not exceed 12 inches on center. Adjoining bars should be spaced approximately ½ inch to 1 inch apart. All bars must be attached at the ends a maximum of 1 inch from the end of each bar. This may require pre-drilling additional holes. All cut bars shall be deburred.

c. Under no circumstances shall the All Purpose Bar be stripped-in with TPO PS Cover Strip. TPO .045 Reinforced 6” X 100’ product may be used to strip-in the All Purpose Bar with a continuous, minimum of 1-1/2” (40 mm) wide weld.

d. The All Purpose Bar must be installed a minimum of 3 inches to a maximum of 6 inches from inside and outside corners.

3. TPO PS RUSS attachment strip

a. The RUSS is a 6" wide reinforced strip of TPO membrane that may be installed at the base of walls and curbs. Mule-Hide 2.4 inch Seam Plates are used to attach the RUSS horizontally with appropriate fasteners. Refer to Mule-Hide Detail # MHT-UN-305B for appropriate placement of the RUSS, plates and fasteners. The RUSS attachment strip is installed prior to the placement of the field sheet. The RUSS attachment strip is to be placed on horizontal surfaces only and not turned up the vertical.

b. Follow the standard procedures for cleaning, applying primer and adhering the RUSS and field sheet. Only Mule-Hide TPO Primer or Low VOC Primer may be used to adhere the RUSS to the field sheet. Bonding Adhesive is **not permitted** for use with the RUSS attachment strips.

c. Spacing of the fasteners shall not exceed 12 inches on center. Adjoining RUSS attachment strips shall be spaced a maximum of 1 inch apart. It is not required to overlap the RUSS.

d. For horizontal attachment, the RUSS attachment strip must be placed a maximum of ½ inch from the base of the angle change extending out onto the horizontal surface (roof substrate). The 2.4 inch Seam Plate must be placed a minimum of ½ inch to a maximum of 1 inch from the exterior edge of the strip. Refer to Mule-Hide Detail # MHT-UN-305B. Installation of the plates must be a minimum of 6 inches to a maximum of 9 inches from the inside and outside corners.

4. Drip Apron and Gravel Stop

a. For drip aprons and gravel stops, the metal flange shall extend a minimum of 3 inches onto the wood nailer. The wood nailer must be wider than the metal flange. Approved screw fasteners shall be installed a maximum of 6 inches on center and ½" to 3/4" from the inside edge of the metal flange. Ring shank nails spaced a maximum of 4" on center may also be used.

b. Drip aprons and gravel stops not made out of TPO Coated Metal shall be primed with Mule-Hide’s TPO Primer or Low Voc Primer and stripped with Mule-Hide’s TPO PS Cover Strip. Cleaning the metal with a solvent such as toluene or xylene to remove oil film may be required prior to

installing and priming with the TPO Primer. Refer to Mule-Hide detail # MHT-UN-106B.

c. When drip aprons are used, proper ballast retainers must be installed.

3.11 Flashing Installation

A. TPO Membrane Flashings

1. All membrane flashings are to be installed concurrently with the roof membrane as the project progresses. Temporary flashings are not allowed without prior written approval from the Mule-Hide Warranty Department. Should any water penetrate the new roofing because of incomplete flashings, the affected areas shall be removed and replaced at the contractor's expense.

2. All surfaces to be fully adhered should be compatible, dry and smooth with no excessive surface roughness.

3. On recover projects, tear off all existing base flashings, cant strips and project flashings down to the substrate. If deteriorated areas of substrate are uncovered, repairs must be made to provide a suitable substrate for the new TPO flashings.

B. **TPO Bonding Adhesive, Low VOC Bonding Adhesive, and Low VOC Bonding Adhesive - 1168 (solvent base)**

1. Mix adhesive scraping the sides and bottom of the can (minimum 5 minutes is required) until adhesive is uniform in color. Consult product data sheet for adhesive instructions.

   a. Low VOC Bonding Adhesive and Low VOC Bonding Adhesive – 1168 require mechanical stirring (electric drill), both initially and periodically during application.
   b. Porous surfaces and substrates may require the application of a prime coat and second coat of Low VOC Bonding Adhesive and Low VOC Bonding Adhesive – 1168 to accomplish proper adhesion.

2. Using a plastic core, medium nap roller, apply a smooth even coat of TPO Bonding Adhesive to back side of membrane and substrate (no globs or puddles). A nine inch roller will easily fit into a 5-gallon adhesive container. **Do not apply adhesive in area of seam laps.**

3. Coverage rate to be approximately:
   120 square feet per gallon for one surface (membrane or substrate only)
   or
   60 square feet per gallon per finished surface (membrane and substrate)

4. Allow adhesive to dry to a ‘tacky’ state. Test adhesive by placing a knuckle into it and turning your wrist a one-quarter turn. Adhesive is ready to mate when it is tacky but does not string when knuckle is lifted.

5. Care must be taken to ensure proper drying. Avoid thin layers of adhesive which can result in over drying and improper adhesion.

6. Roll coated membrane onto substrate being careful to not wrinkle the sheet or trap air bubbles. Once membrane is mated to the substrate, carefully roll the membrane with a 2-inch wide rubber hand roller to promote maximum positive contact between the membrane and the substrate.

7. TPO Membrane Flashings shall extend a minimum of 6 inches onto the field

sheet and be adhered securely. There shall be a minimum of 2 inches between the front of the fastener plates and the edge of the sheet to allow for heat welding. All side laps are to overlap a minimum of 2 inches.

8. **Areas of the flashings and membrane to be welded are not to have Bonding Adhesive applied to them.**

9. Extended drying times can be expected during cool, overcast, humid, shaded, or late day applications. The adhesive must be dry (but still tacky) before mating surfaces to avoid permanent blisters due to trapped solvents.

10. All flashings shall be extended a minimum of 8 inches above roof membrane level and be terminated unless previously accepted by the owner or his representative and the Mule-Hide Technical Department. All flashings shall be hot air welded at their connections with the roofing membrane. Apply Cut Edge Sealant at all welded edges of cut membrane flashings. Refer to Mule-Hide TPO Standard Details for more information.

NOTE: After flashing is adhered in place, promote full contact adhesion by going back over entire area with a 2-inch rubber hand roller.

C. **WBBA-2000** (Water Base Bonding Adhesive)

1. Mix adhesive scraping the sides and bottom of the can (minimum 5 minutes is required) until adhesive is uniform in color. Consult product data sheet for adhesive instructions.

2. Using a 9” wide, ¼” or 3/8” nap roller, apply a smooth even coat of WBBA-2000 adhesive to back side of membrane and substrate (no globs or puddles). A nine inch roller will easily fit into a 5-gallon adhesive container. **Do not apply adhesive in area of seam laps.**

3. Coverage rate to be approximately:
120 square feet per gallon for one surface (membrane or substrate only)
or
60 square feet per gallon per finished surface (membrane and substrate)

4. Allow adhesive to dry until it turns translucent and does not transfer to a dry finger or pull away from the substrate. WBBA-2000 adhesive will take a longer time to dry. Adhesive must remain tacky.

5. Mate surfaces together avoiding wrinkles. Immediately roll the bonded area of the sheet with a 2-inch wide rubber hand roller to promote maximum positive contact between the membrane and the substrate. Overlap all adjacent flashing sheets a minimum of 2 inches.

6. **Do not apply adhesive in area to be heat-welded.**

7. Extended drying times can be expected during cool, overcast, humid, shaded, or late day applications. The adhesive must be dry (but still tacky) before mating surfaces to avoid permanent blisters due to trapped moisture.

8. Overlap all adjacent flashing sheets a minimum of 2 inches. TPO Membrane Flashings shall extend a minimum of 6 inches onto the field sheet and be adhered securely. There shall be a minimum of 2 inches between the front of the fastener plates and the edge of the sheet to allow for heat welding. All side laps are to overlap a minimum of 2 inches.

9. All flashings shall be extended a minimum of 8 inches above roof membrane level and be terminated unless previously accepted by the owner or his representative and the Mule-Hide Technical Department. All flashings shall be

hot air welded at their connections with the roofing membrane. Apply Cut Edge Sealant at all welded edges of cut membrane flashings. Refer to Mule-Hide TPO Standard Details for more information.

NOTE: After flashing is adhered in place, promote full contact adhesion by going back over entire area with a 2-inch rubber hand roller.

10. All flashings shall be hot air welded at their connections with the roofing membrane. All hand welds shall be a minimum of 1-1/2" wide.

11. All flashings shall be properly terminated according to Mule-Hide's published Standard Details.

NOTE: When using Mule-Hide All-Purpose Bar under Counterflashing to terminate wall flashing or when coping is used, TPO Bonding Adhesive, Low VOC Bonding Adhesive, Low VOC Bonding Adhesive – 1168, or WBBA-2000 Bonding Adhesive may be eliminated when flashing height is 12” - 18” or less, depending on the type of termination. Refer to Mule-Hide’s published Standard TPO Details for additional information.

3.12 Drains, Expansion Joints, Pitch Pans

A. Roof Drains

1. Prepare the surface around each drain to prevent any distortion, tenting, or bridging of the membrane. A smooth transition shall be provided from the roof surface to the surface of the drain bowl/clamping ring.

2. All existing roofing materials and metal flashings shall be removed.

3. Mule-Hide requires the application of one full tube of Water Cut-Off Mastic per drain applied to the drain bowl, under the membrane, where the clamping ring will be seated. This will provide a continuous seal between the membrane and the drain bowl.

4. Do not run field seams through drains or sumps. If sheet layout causes a seam to fall in line with a drain or sump, a target patch (minimum 36” x 36”) shall be required.

B. Expansion Joints

1. Refer to Mule-Hide’s published Standard TPO Details for application methods for flashing expansion joints.

C. Pitch Pans

1. Install and flash pitch pans as indicated in Mule-Hide’s published Standard TPO Details. All pitch pans shall be filled with Thermoplastic Pourable Sealant.

3.13 Walkway Installation

Walkways should be provided in areas where routine rooftop maintenance occurs and in areas where regular rooftop traffic is expected.

A. TPO Walkway Roll Installation

1. Install TPO Walkway Rolls over clean, dry surfaces.

2. Layout areas where TPO Walkway Rolls are to be installed with most of the material being oriented so that it is placed between field seams with each adjacent and abutting section gapped a minimum of 6". Do not install walkway

pads over seams.

3. Heat weld the perimeter of the properly positioned TPO Walkway Roll. Check seams for any voids or inconsistencies that might prevent watertightness.

B. Precast Pavers

1. Install precast paver systems acceptable to Mule-Hide over one layer of 6 oz. HP Protection Mat. Contact Mule-Hide for other acceptable slipsheets.

3.13 Temporary Tie-ins

A. Install temporary cutoffs around incomplete edges of roofing assembly at the end of each day's work and when work must be postponed due to inclement weather. Straighten the insulation line using pieces of insulation loosely laid, and seal the Mule-Hide TPO membrane to the deck or existing membrane. Use a heavy application of roof cement at least six inches in width overlaid with an embedded reinforcement on gravel surfaced roofs. Use polyurethane sealant, low rise foam adhesive, or pourable sealer to seal onto single plies, smooth BUR, or modified bitumen roofs. Remove the temporary seals completely when work resumes, cutting out the contaminated membrane. Remove all sealant, contaminated membrane, insulation fillers, etc. from the work area and properly dispose off-site.

End of Section

This specification represents the applicable information available at the time of its publication. Mule-Hide reserves the right to change this information at any time. Contact Mule-Hide or check the Mule-Hide website (www.mulehide.com) for the latest updates regarding changes or modifications to this specification.

MULE-HIDE PRODUCTS CO., INC
Ballasted Roofing System
SUMMARY SPECIFICATION

TPO Systems

This Summary Specification is a brief overview of Mule-Hide Product's specification and requirements for a Ballasted Mule-Hide Reinforced TPO Roofing System and is intended for use as a submittal in a bid package. Specifier's and Mule-Hide Warranty Eligible Contractors must comply with Mule-Hide Product's specifications and requirements prior to design or bid.

Part 1 General

1.01 Description

The Mule-Hide Ballasted Reinforced TPO Roofing System utilizes a (maximum) 12' wide, scrim reinforced Mule-Hide TPO membrane in thickness of 45, 60, or 80 mil. Approved insulation is loosely laid to the substrate, and the TPO membrane is loosely laid over the insulation. The entire roof assembly is then covered with rock ballast, pavers, or a combination of both. The adjoining sheets are overlapped approximately 3" and seamed together with a min 2" wide heat weld.

1.02 Quality Assurance

A. The roofing system must be installed by a Mule-Hide Warranty Eligible Contractor in accordance with installation guidelines and detail drawings as approved by Mule-Hide. Prior written approval from the Mule-Hide Warranty Department is required for all deviations from Mule-Hide's published specifications and details.

B. Projects requesting a Labor and Material Warranty will be inspected by a Mule-Hide Representative to verify that Mule-Hide's installation and material requirements have been met.

C. Mule-Hide roofing systems offer a variety of Underwriters Laboratories (UL), Factory Mutual (FM) and other ratings. Consult the appropriate approval guides and Mule-Hide Products for specific code approvals.

1.03 Submittals

A. To ensure compliance with Mule-Hide's warranty requirements contact the Mule-Hide Warranty Department if any of the following conditions exist.
   1. Specified wind speed warranty greater than 55 MPH.
   2. Building height is greater than 60'
   3. Projects located in coastal or high wind zones.
   4. Pressurized buildings
   5. Cold Storage or Freezer Buildings
   6. Membrane exposed to chemicals

B. Submit a completed Warranty Application form to Mule-Hide prior to bidding. Also include fastener pullout testing results as required for non-standard substrates.

C. All projects must have a Mule-Hide warranty application number assigned prior to inspection.

1.04 Product Delivery, Storage, and Handling

A. Deliver materials to the job site in original, unopened containers, with the manufacturer's name, brand name and installation instructions.

B. Store all materials in a dry, clean area protected from the elements, as per manufacturer's recommendations.

1.05 Job Conditions

A. All existing wet or damaged roofing materials must be removed and replaced with new materials.

B. All existing phenolic insulation and sprayed-in-place urethane roofs must be removed.

C. The specifier must determine the use and placement of vapor retarders. Consult ASHRAE (American Society of Heating, Refrigerating, and Air-Conditioning Engineers, Inc.) and NRCA (National Roofing Contractors Association) publications.

D. Coordinate work between all trades to avoid traffic over completed sections of roofing.

1.06 Warranty.

Fees are required for all Labor and Material (System) Warranties. System Warranties must be obtained through a Mule-Hide Warranty Eligible Applicator. All projects requesting a System Warranty must be inspected by a Mule-Hide Representative. Components of the roofing system must be supplied by Mule-Hide. Warranty covers only Mule-Hide supplied materials. Sample warranties are available upon request. Contact Mule-Hide Warranty Department for warranty requirements.

Part 2 Products

2.01 General

A. The components of this roofing system are to be manufactured, supplied, or approved in writing by Mule-Hide Products.

2.02 Membrane

Mule-Hide White, Gray, or Tan, reinforced 45, 60, or 80-mil thick Thermoplastic Polyolefin (TPO) membrane is used for this system. The membrane is available in a variety of widths up to 12' and in lengths of 100'. Refer to our Product Data Sheet for physical properties and other information.

2.03 Related Materials

Mule-Hide products include: Reinforced and Non-Reinforced Flashings, Bonding Adhesives, TPO Cut-Edge Sealant, TPO Coated Metal, Membrane fasteners and discs, Thermoplastic One-Part Pourable Sealer, All-Purpose Bar, TPO Walkway Roll, Universal Single Ply Sealant, and other components.

Part 3 Execution

3.01 General

A. Work should begin at the highest point of the roof level and proceed to the lowest point. Work should be completed on a daily bases including flashings, terminations, and daily seals.

B. Prepare the existing roof deck or substrate according to Mule-Hide design guides and full-system specifications prior to applying the new roofing system.

3.02 Roof Deck Criteria

A. A proper substrate shall be provided by the building owner. The structure shall be able to withstand normal construction loads and live loads.

B. Substrate must allow for drainage so that all water is removed within 48 hours after a rain.

C. Roof deck must be capable of supporting a ballasted roofing system.

3.03 Substrate Preparation

A. Re-cover projects - All wet or damaged materials must be removed and replaced with new materials.

B. Substrate must be clean, level, and smooth so that the insulation lays flat. Fresh applications of bitumen based roof cement must be removed or covered.

3.04 Installation

Refer to the applicable Product Data Sheets and Material Safety Data Sheets for cautions and warnings.

A. Insulation Attachment

Roof insulation is loosely laid in place over existing substrate.

B. Membrane Installation and Hot Air Welding

Place membrane over substrate with minimum 3" overlap at lap seams and positioned so that laps will shed water. Allow membrane to relax. Hot-air weld seams with automatic welder to achieve a minimum 2" wide heat weld. Hand welded field seams are not allowed. Ballast membrane with washed river rock at a minimum rate of 10 lbs per square foot or concrete pavers at a minimum rate of 22 lbs per square foot.

C. Additional Membrane Securement

The membrane must be secured at the perimeter of each individual roof area, projection, and any angle change that exceeds 2" per lineal foot. Consult Mule-Hide's published detail drawings.

D. Membrane Flashing

All existing base flashings are to be removed or covered with a suitable material. Install new membrane flashings as per manufacturer's details and guidelines. Flashings must be terminated along top edge as per appropriate Mule-Hide detail.

E. Other Related Work

1. Walkways should be provided in areas where regular rooftop traffic is expected. Walkways are considered a maintenance item and are excluded from the Mule-Hide warranty.

2. Mule-Hide TPO Walkway Rolls are to be installed over clean, dry surfaces, with a minimum 6" spacing over field seams. Hot air weld the perimeter of the Walkway Roll to the field membrane.

3. Concrete pavers may be used if installed over one layer of HP Protection Mat.

4. Copings, counter flashing and other metal work shall be fastened to resist wind uplift and prevent buckling. Metal should be sealed to prevent moisture infiltration.

This summary specification represents the applicable information available at time of publication. Mule-Hide reserves the right to change this information at any time. Contact Mule-Hide Products or visit our website at www.mulehide.com for the latest updates, changes, or modifications to this summary specification.

SECTION 4

MULE-HIDE PRODUCTS CO., INC.

TPO Fully Adhered Specification

TPO Fully Adhered Fleece Back / Fleece Back Plus Specification

TPO Fully Adhered Self Adhering Specification

TPO Fully Adhered Summary Specification

TPO Fully Adhered Fleece Back / Fleece Back Plus Summary Specification

TPO Fully Adhered Self Adhering Summary Specification

PLEASE CONSULT THE MULE-HIDE WEBSITE FOR THE MOST CURRENT INFORMATION AT WWW.MULEHIDE.COM

MULE-HIDE PRODUCTS CO., INC.
FULLY ADHERED TPO SYSTEM
SPECIFICATION

07 54 00/MUL

TABLE OF CONTENTS

PLEASE CONSULT THE MULE-HIDE WEBSITE FOR THE MOST CURRENT INFORMATION AT WWW.MULEHIDE.COM

MULE-HIDE PRODUCTS CO., INC.
FULLY ADHERED TPO SYSTEM SPECIFICATION

Revised Nov 2014
07 53 00/MUL

PART 1 - GENERAL

1.01 Description

A. Scope:

1. Furnish and install a Fully Adhered TPO Roofing Membrane with flashings and accessories necessary to comprise a roofing system. The Mule-Hide TPO products and accessories shall be installed in strict compliance with current specifications and drawings as published by Mule-Hide Products Co., Inc. (“Mule-Hide”).

2. The Mule-Hide Fully Adhered TPO (Thermoplastic Polyolefin) Membrane Roof System utilizes a 45-mil (.045 inch), 60-mil (.060 inch) or 80-mil (.080 inch) thick reinforced TPO sheet. The TPO membrane is fully adhered to the substrate with bonding adhesive. Adjoining sheets are overlapped a minimum of 3 inches and welded with a robotic welder. The field membrane is secured at all changes in plane greater than 2” per foot. Note: All membrane thicknesses listed in this specification are nominal thicknesses.

B. Related Work:

The work includes, but is not necessarily limited to the installation of:

1. Vapor Retarder (where specified)
2. Wood Blocking (Nailers)
3. Insulation
4. Slip Sheet (where required)
5. Fasteners
6. Roof Membrane
7. Roof Membrane Flashings
8. Metal Flashings
9. Adhesives
10. Sealants
11. Walkways

Note: Mule-Hide recommends adherence to industry standards (SMACNA) for the installation of any metalwork.

1.02 Quality Assurance

A. The Mule-Hide Fully Adhered Reinforced TPO Membrane Roofing System shall be installed by an independent roofing contractor eligible (Warranty Eligible) to apply for Mule-Hide "System Warranties" when Standard System or Premium System Warranties are requested.

B. There shall be no deviations from this specification or the Mule-Hide Products Co., Inc. ("Mule-Hide") standard details without prior written approval from Mule-Hide's Warranty Department.

C. Upon completion of the installation according to the terms and conditions stated in this specification and in accordance to the information given in the Warranty Application and Pre-Job survey form and any additional approvals which might have been given by Mule-

Hide, an authorized representative of Mule-Hide shall perform an on-site inspection of the roof to verify that all installation and material requirements have been met.

Note: Inspections are only conducted on projects where a "System Warranty" is requested. Inspections are not conducted on projects not requiring a Mule-Hide Warranty or when only a "Roofing Membrane Limited Warranty" is requested. The sole purpose of an inspection by a Mule-Hide Representative is not to be a final inspection for the benefit of the Building Owner/Owner's Representative. It is for the benefit of Mule-Hide to determine if a warranty may be offered for the project.

D. Mule-Hide reserves the right to reject any roof system and refuse to issue any warranty on roofs which do not comply with Mule-Hide's specifications or current policies.

1.03 Submittals

A. Prior to the time of bidding, the roofing contractor shall submit to the Owner or Owner's representative the following items:

1. Copies of Mule-Hide specifications and published product data.
2. Samples of each material to be used in the roof system.
3. Specimen copy of Mule-Hide Products Co. warranty
4. Dimensioned shop drawings to include an outline of the roof and appropriate details for flashings and terminations.
5. Certification from insulation, roofing and accessory components manufacturers that all materials supplied comply with identified ASTM and industry standards.
6. Verification that system specifications meet all identified code and insurance requirements including but not limited to the following:

   a. Factory Mutual Research Laboratories
   Norwood, MA

   b. Underwriters Laboratories
   Northbrook, IL

   Note: It is the Building Owner/Owner's Representative's responsibility to determine what submittals are required for the project.

B. Submit to Mule-Hide, prior to the job start, a Heat-Weld System Warranty Application to be reviewed by the Mule-Hide Warranty Department to determine the acceptability of the project based on the information provided.

1. The Heat-Weld System Warranty Application ("Warranty Application") must be completely filled out and should be accompanied with a copy of the written roof specification (if available). Also included should be any requests for deviations to Mule-Hide's standard published specification and details.

2. A roof drawing shall be submitted with the Warranty Application indicating all dimensions and locations of all penetrations.

1.04 Product Delivery, Storage and Handling

A. All products delivered to the job site shall be in their original unopened containers or wrappings and clearly labeled with the manufacturer's name, product identification and date of manufacture.

B. Protect all materials from damage during transit, storage and delivery to the job site.

Place all materials on pallets and protect from moisture.

C. Store all materials in a dry, clean area protected from the elements. All rolls of membrane shall be stored flat on pallets.

D. All adhesive and caulking shall be stored at temperatures between 60°F and 80°F. Materials exposed to lower temperatures affect the workability and performance of the product. Products shall be restored to the above temperature prior to use.

E. All flammable materials shall be stored in a cool, dry area away from open flames and sparks. Follow precautions outlined on containers or supplied by the material manufacturer/supplier.

F. All materials determined as being damaged (confirmed by Mule-Hide) due to improper storage on the job site are to be replaced with new materials.

1.05 Job Conditions

A. This specification shall not be considered applicable without the appropriate additional specifications approved by Mule-Hide if it should be determined that any of the following conditions exist:

1. The installation of any Mule-Hide Roof System is in a coastal area or high wind zone.

2. If the Mule-Hide Roof System should exceed the structural load conditions as determined by an architect or Engineer.

3. When chemical or hazardous materials are discharged onto the Mule-Hide Roof System.

B. Mule-Hide TPO roofing materials may be installed in temperatures below 40° F but only after consultation with the Mule-Hide Technical Department as special precautions or procedures may be necessary. The performance of the materials, installation costs and production rates may be affected.

C. The General Contractor or the building owner shall be responsible for providing adequate surfaces and structures to receive the insulation, Mule-Hide Roof System and related sheet metal necessary for the successful completion of the project.

D. Only as much new roofing as can be made watertight each day shall be installed each day. This includes all flashing work.

E. All substrates to receive new insulation, membrane or flashing shall be thoroughly dry. Should surface moisture occur, the contractor shall provide adequate equipment to dry the substrate prior to application of new materials.

F. Prior to and during application, all dirt, debris and dust shall be removed from surfaces to be roofed for both new and reroofing substrates.

G. On all projects where the Fully Adhered TPO system is specified, it is the responsibility of the independent roofing contractor to have the owner or owner's representative verify the condition of the deck or substrate and to confirm the roof deck can withstand the additional load.

H. Precautions shall be taken to prevent wind blow-off or wind damage during the course of the roofing application. This may necessitate additional securement of temporary construction, materials and equipment.

I. The contractor shall verify and ensure that all roof drain lines are unblocked before starting work. Any blockages found shall be reported to the owner's representative and Mule-Hide's Warranty Department in writing.

J. Temporary waterstops shall be installed at the end of each day's work. Temporary waterstops shall be removed at the start of the next day's work and disposed of properly. Waterstops shall be compatible with all materials.

K. Do not install the Mule-Hide TPO Roofing Membrane in direct contact with any product containing coal tar pitch, creosote or penta-based materials. Consult the Mule-Hide Technical Service Department for special installation requirements.

L. Do not allow contaminants such as petroleum, grease, acid, solvents, vegetable or mineral oil, animal oil, animal fat, etc. or direct steam venting to come into direct contact with the Mule-Hide TPO Roofing Membrane. Contact the Mule-Hide Technical Service Department for recommendations if such conditions exist.

M. The contractor shall follow and comply with all safety regulations as recommended by OSHA.

N. All work shall be scheduled and executed without exposing interior building areas to the effects of inclement weather. The existing building and its contents shall be protected against all risks.

O. Arrange work sequence to avoid use of newly constructed roofing for storage, walking surfaces and equipment movement. Contractor shall provide all necessary protection and barriers to segregate the work areas and prevent damage to adjacent areas. If excessive traffic over newly installed membrane is necessary, contractor shall provide plywood or polyester felt protection to prevent damage. All damaged materials shall be replaced with new materials.

P. All existing roofing materials to be removed for construction shall be immediately removed from the construction site to a dumping area authorized to receive such debris. Any hazardous materials such as asbestos or materials containing asbestos fibers shall be removed and disposed of in accordance with applicable City, State and Federal requirements.

Q. Any unusual or concealed condition discovered during the course of the work is to be reported to the owner and Mule-Hide immediately in writing. Work is to be halted until the owner has responded with a solution to the problems.

R. All local building codes and requirements should be followed where applicable. It is the roofing contractor's sole responsibility to determine and ensure that the roofing system selected complies with all local codes and requirements.

S. Both interior and exterior building areas affected by construction shall be cleaned up and any damaged areas shall be repaired to the owner's satisfaction.

T. Certain project conditions may require modifications to this specification. Contact the Mule-Hide Warranty Department if any of the following conditions exist:

1. Roof heights greater than 100 feet.

2. Geographical location in a 100 mph or greater wind zone, per the ANSI 100 year mean recurrence interval wind isotach.

3. Location with a D exposure as determined in ANSI A58.1

U. When using heat-welding equipment, always review the equipment manufacturer's instructions, precautions and warnings.

V. Consideration should be given in the project design to problems that can precipitate from the smooth surface characteristic of the Mule-Hide TPO membrane.

1.06 Warranties

All Mule-Hide warranties are available for commercial projects. A Roofing Membrane Limited Warranty for a maximum of 10 years is available for residential projects.

A. Mule-Hide's Roofing Membrane Limited Warranty

Mule-Hide offers a 10, 15, or 20-year Roofing Membrane Limited Warranty ("Warranty") for a charge. The Warranty covers only the Mule-Hide TPO membrane (or portion thereof) determined by Mule-Hide to be defective and resulting in roof leaks. This Warranty does not cover workmanship or other components not supplied by Mule-Hide. Mule-Hide does not perform inspections of the installation before issuing the Roofing Membrane Limited Warranty. A Mule-Hide Warranty Application and the appropriate fee must be submitted to Mule-Hide to obtain this warranty. Proof of purchase may be required.

Note: Projects requesting a 20-year Roofing Membrane Limited Warranty require the use of a minimum 60-mil (.060 inch) thick TPO membrane and shall incorporate additional design enhancements as outlined in the 20-year Design Enhancements for TPO Fully Adhered Roofing System Specification. Mule-Hide recommends that Warranty Applications be submitted for review prior to bidding the project.

B. Mule-Hide's Standard System Warranty

Mule-Hide offers a 10, 15, or 20-year Standard System Warranty ("Standard") for commercial projects for a charge. The Standard warranty is a "No Dollar Limit", labor and material warranty that covers the Mule-Hide labeled membrane and other components supplied by Mule-Hide installed by a Mule-Hide Warranty Eligible Applicator. The Standard warranty does not cover insulation or its attachment system. Metal flashing components not supplied by Mule-Hide are not covered under this warranty. A Mule-Hide Warranty Eligible Applicator must submit a Warranty Application and the appropriate fee to Mule-Hide. Standard warranties require inspections by a Mule-Hide representative.

Note: Projects requesting a 20-year Standard System Warranty require the use of a minimum 60-mil thick TPO membrane and shall incorporate additional design enhancements as outlined in the 20-year Design Enhancements for TPO Fully Adhered Roofing System Specification. Mule-Hide recommends that Warranty Applications be submitted for review prior to bidding the project.

C. Mule-Hide Premium System Warranty

Mule-Hide offers a 10, 15, or 20-year Premium System Warranty ("Premium") for commercial projects for a charge. The Premium warranty is a "No Dollar Limit", labor and material warranty that covers the Mule-Hide labeled membrane, insulation, other components supplied by Mule-Hide and approved products (such as insulation adhesive or other pre-approved accessories) installed by a Mule-Hide Warranty Eligible Applicator. A Mule-Hide Warranty Eligible Applicator must submit a Warranty Application and the appropriate fee to Mule-Hide. Premium warranties require inspections by a Mule-Hide representative.

Note: Projects requesting a 20-year Premium Warranty require the use of a minimum 60-mil thick TPO membrane and shall incorporate additional design enhancements as outlined in the 20-year Design Enhancements for TPO Fully Adhered Roofing System Specification. Mule-Hide recommends that Warranty Applications be submitted for review prior to bidding the project.

D. Metal flashing products supplied by Mule-Hide (Mule-Hide Metal Accessories) and installed by a Mule-Hide Warranty Eligible Applicator will be covered under a Standard or Premium System warranty.

E. Standard and Premium System warranties are not available for residential projects.

F. TPO tie-ins to built-up (BUR) or any other type of roof system are not covered by Mule-Hide warranties.

G. Contact Mule-Hide for other extended warranties that may be available.

H. Terms and Conditions of Warranties

Mule-Hide's obligations under the Roofing Membrane Limited Warranty, the Standard System Warranty, and the Premium System Warranty are limited to the specific terms and conditions of the respective Warranties. Sample copies of the Mule-Hide Warranties are available from Mule-Hide upon request.

PART 2 - PRODUCTS

2.01 General

A. The components of the Fully Adhered Mule-Hide TPO Membrane Roof System are to be products manufactured or supplied by Mule-Hide Products Co., Inc.

B. Components other than those supplied or manufactured by Mule-Hide may be submitted for review and acceptance by Mule-Hide's Warranty Department. Mule-Hide's acceptance of any other product is based solely on chemical compatibility and published performance data provided by the component manufacturer. Other components may be considered on a job-by-job basis and must be approved in writing by Mule-Hide's Warranty Department. Mule-Hide offers no warranty or guarantee for the performance or suitability of any component not supplied or manufactured by Mule-Hide.

2.02 Roofing Membrane

The Mule-Hide Reinforced TPO-c Membrane is available in 45 mils (.045 inch), 60 mils (.060 inch),or 80 mils (.080 inch) thick. The Mule-Hide TPO-c membrane is a polyester scrim reinforced thermoplastic polyolefin roofing membrane that meets and exceeds the requirements of ASTM D6878 Standard Specification for Thermoplastic Polyolefin Based Sheet Roofing. Refer to the Product Data Sheets for physical properties and additional information.

2.03 Accessory Materials

The following Mule-Hide materials must be used to install Mule-Hide Roof Systems. Mule-Hide will not warrant any application where another manufacturer's product is substituted for a Mule-Hide product. **All products listed below are physically and chemically compatible with each other.**

A. Mule-Hide TPO Bonding Adhesive - A solvent-based rubberized adhesive used for bonding Mule-Hide TPO-c Membrane to various vertical substrates and insulation boards. Mule-Hide TPO Bonding Adhesive is a two-surface contact adhesive that is

applied to both the underside of the membrane and substrate surface. This product may be used with TPO field membrane and flashing membrane. Adhesive is compatible with polyisocyanurate, wood fiberboard insulations, fiberglass-faced gypsum panels, concrete, masonry, metal and wood surfaces.

B. Mule-Hide Low VOC Bonding Adhesive - A high strength solvent-based contact adhesive that allows bonding of TPO membrane to various porous and non-porous substrates. It is specially formulated using a blend of VOC exempt and non-exempt solvents to meet the < 250 g/l VOC content requirements of the OTC Model Rule for Single Ply Roofing Adhesives.

C. Mule-Hide Low VOC Bonding Adhesive - 1168 – A high strength solvent-based contact adhesive that allows bonding of TPO membrane to various porous and non-porous substrates. It is specially formulated using a blend of VOC exempt and non-exempt solvents to meet the < 250 g/l VOC content requirements of the OTC Model Rule for Single Ply Roofing Adhesives. **This product COMPLIES with the following California counties' VOC regulations:** Alameda, Contra Costa, El Dorado, Los Angeles, Marin, Napa, Orange, Riverside, Sacramento, San Bernardino, San Diego, San Francisco, San Mateo, Santa Clara, Solano, Sonoma, and Tehama.

D. Mule-Hide WBBA-2000 – A water base adhesive used to bond Mule-Hide TPO-c membrane to various vertical substrates and insulation boards. WBBA-2000 is applied as a two-sided contact adhesive when used with standard (non-fleece back) TPO membranes, or as a single-side, wet lay-in adhesive when used with Mule-Hide Fleece Back TPO membrane.

E. Mule-Hide TPO Primer - A high-solids-content, clear (translucent color), polymer-based splice primer used to prepare TPO membrane for improved adhesion to pressure-sensitive TPO accessories such as: RUSS Strips, TPO Pressure Sensitive Cover Strips, Uncured Flashing Tapes and Cured Cover Tapes. Mule-Hide TPO Primer is required to prepare TPO membrane surfaces prior to the application of any pressure sensitive Mule-Hide accessories.

F. Mule-Hide Low VOC Primer - a solvent-based product designed to prepare TPO membrane for improved adhesion to pressure-sensitive TPO accessories such as: RUSS Strips, TPO Pressure Sensitive Cover Strips, Uncured Flashing Tapes and Cured Cover Tapes. This Low-VOC product is ideal for use in states where VOC content is a concern.

G. Mule-Hide TPO Flashing - a non-reinforced, .060-inch thick material primarily used to seal details where field fabrication is necessary, such as drain details, pipe flashings, pitch pocket flashings, seaming joints of the Mule-Hide TPO Coated Metal, and any place where reinforced membrane is not practical.

H. Mule-Hide TPO Universal Corners - .060-inch thick pre-molded, non-reinforced TPO material. They are uniform in shape and size and provide water tightness at corners formed by TPO coated metal and flashing membrane. They provide a neat, finished look to building corners, curbs and parapet flashings with no cutting or stretching required. Universal Corners are available in white only.

I. Mule-Hide TPO Outside Corners – are pre-molded and are used for flashing outside corners on a variety of details. Installation is fast and easy with no cutting or stretching required. TPO Outside Corners are available in white, gray, and tan.

J. Mule-Hide TPO Inside Corners – are pre-molded and are used for flashing inside corners on a variety of details. Installation is fast and easy with no cutting or stretching required. TPO Inside Corners are available in white, gray, and tan.

K. Mule-Hide Weathered Membrane Cleaner - Used to clean in-service TPO-c membrane prior to the welding process. This cleaner helps to loosen and remove dirt and other contaminants from the surface of the TPO-c membranes and leaves a suitable surface for welding or the subsequent application of TPO Primer.

L. Mule-Hide TPO Pipe Seal - An injection molded, pre-formed flashing for pipes made of Mule-Hide non-reinforced TPO material. They are designed to add ease to the installation process while offering increased watertight security and improved aesthetics. TPO Pipe Seals are designed as an economical flashing for single pipe penetrations on Mule-Hide TPO-c Membrane roof systems. The TPO Pipe Seals can be used wherever the TPO Pipe Seals may be slipped over the top of the pipe.

M. Mule-Hide TPO T-Joint Cover - 60-mil non-reinforced flashing cut into a 4.5” diameter circle used to seal step-offs at splice intersections. Installation is mandatory on all 60-mil and 80-mil TPO systems and on all jobs warranted longer than 15 years.

N. Mule-Hide TPO Coated Metal – 24-gauge, galvanized steel to which is laminated 35 mils (.035" thick) of Mule-Hide non-reinforced TPO Membrane used for flashing and edge metal detailing.

O. Mule-Hide All-Purpose Bar ("A-P Bar") - an extruded aluminum bar, 50 mils (.050") thick, used to terminate adhered reinforced membrane vertical flashings in certain constructions. Mule-Hide A-P Bar may also be used to anchor the field sheet at the base of vertical angle changes.

P. Membrane Fasteners and Discs - Mule-Hide offers a variety of membrane fasteners and discs to meet specific job conditions and substrates.

Q. Mule-Hide Thermoplastic Pourable Sealant - a one-component thermoplastic sealant for use in pitch pockets.

R. Mule-Hide TPO .045 Reinforced 6” X 100’ – used for stripping-in TPO Coated Metal and as cover strips over TPO Coated Metal joints.

S. Mule-Hide TPO Cut Edge Sealant – A solvent-based liquid sealant used to seal the cut edge of the Mule-Hide TPO Membrane.

T. Mule-Hide TPO Walkway Rolls – a 1/8-inch thick embossed TPO membrane available in rolls (34" x 50’) having a herringbone traction surface. Walkway Rolls are trimmed in safety yellow along the length of the sheet to better define the walkway area. Walkway Rolls may be welded directly to the TPO roofing membrane. The yellow edges are smooth without safety lugs to allow for easier welding. Walkway Rolls are available in White and Gray colors.

U. Mule-Hide Insulation - Mule-Hide Poly ISO polyisocyanurate insulation (flat or tapered) is a closed-cell polyisocyanurate foam core laminated to heavy, black (non-asphaltic) glass fiber reinforced felt facers.

V. Mule-Hide HP Protective Mat - A nominal 6.0-ounce per square yard (140 grams per square meter) UV resistant polypropylene needle punched fabric. It can be used above the membrane as a slipsheet for protection from damage by materials placed on top of the membrane.

2.04 Related Materials By Others

A. Wood Nailers

1. Nailers shall be #2 or better lumber. Creosote and asphaltic preservatives are not acceptable. Pressure treated lumber is not required on new construction unless specified by the architect.

2. Wood nailers shall conform to Factory Mutual's Loss Prevention Data Sheet 1-49.

3. Wood nailers shall be installed as specified on the project drawings and shall be of a height sufficient to match the thickness of the insulation being used.

B. Vapor Retarders

1. Vapor retarders shall meet specified codes and insurance requirements.

2. Vapor retarders shall be compatible with insulation and other accessories.

3. The use and placement of a vapor retarder should be determined by an architect or engineer. Mule-Hide does not require the use of vapor retarders. However, Mule-Hide recommends that a vapor retarder be considered when both of two conditions are anticipated:

   a. The outside average January temperature is below 40°F, and

   b. The expected interior winter relative humidity is 45% or greater.

4. Mule-Hide must be contacted for buildings that are refrigerated (freezers or cold storage) or have a high interior humidity such as, but not limited to, swimming pools, produce storage or locker rooms.

C. Insulation

1. Insulation shall be installed as a protection layer over the existing substrate or to obtain a desired thermal value.

2. Insulation shall be compatible with the Mule-Hide TPO Membranes, Mule-Hide Adhesives, Mule-Hide TPO Flashings and other Mule-Hide Accessories.

3. The following insulation boards are acceptable for use with a fully adhered roofing system when a standard warranty is requested:

   a. Polyisocyanurate insulations having non-asphaltic facers (foil facers are not acceptable) meeting the physical property requirements of Fed. Spec HH-I-1972 and having a minimum compressive resistance of 18 psi. Thickness minimum is 1.0" or greater as required by insulation manufacturer to span steel deck flutes.

   b. High Density Wood Fiberboard - may be used as an overlay over other insulations. 1/2-inch thick is the minimum requirement when used as an overlay. Mule-Hide requires a minimum 1-inch thick board when installing directly over steel decks. Wood and concrete decks require a minimum 1/2-inch thick board. Minimum thicknesses and attachment rates will vary with wind requirements and deck types.

   c. Expanded Polystyrene. Density of boards must be 1.0 PCF certified minimum and meeting ASTM C578, Type II physical properties. Minimum thickness shall be 1.0 inch. When installing directly over a steel deck the minimum thickness shall be as required by insulation manufacturer to span flutes. An overlay of a minimum 1/2" thick HD

Wood Fiberboard, minimum 1" polyisocyanurate insulation, minimum ¼" DensDeck, or minimum ¼" Securock is required. Check local building codes as a layer of gypsum board may be required under the EPS insulation (on steel decks).

d. Extruded polystyrene meeting ASTM C578, Types IV, VI or VII physical properties. Minimum thickness shall be 1.0 inch. When installing directly over a steel deck the minimum thickness shall be as required by insulation manufacturer to span flutes. An overlay of a minimum 1/2" thick HD Wood Fiberboard, minimum 1" polyisocyanurate insulation, minimum ¼" DensDeck, or minimum ¼" Securock is required. Check local building codes as a layer of gypsum board may be required under the extruded insulation (on steel decks).

e. Perlite Insulation – Perlite is not an acceptable insulation. Perlite may only be used as a fill insulation under an approved insulation. The TPO membrane cannot be adhered directly to perlite insulation.

f. Dens Deck Prime or Securock - A minimum 1/4" thick layer of Dens Deck Prime or Securock may be used as an overlay over an approved insulation or as a thermal barrier over a combustible deck.

g. State and local building codes should be reviewed regarding the installation of expanded or extruded polystyrene insulation directly over a steel deck.

4. Insulation manufacturer shall provide its recommendations for use and attachment to the owner with a copy sent to Mule-Hide's Warranty Department. In addition, the insulation manufacturer shall provide a copy of their specific warranty conditions.

5. Mule-Hide Premium Warranties require the use of the Mule-Hide labeled insulation or insulation by an approved Mule-Hide manufacturer. Use of other insulations may disqualify the project for consideration of the issuance of a Premium warranty. Contact the Mule-Hide Technical Service Department for specific requirements.

D. UL and FM Approved Assemblies

Contact Mule-Hide Technical Department for proper insulated assemblies when projects require compliance with UL or FM requirements. The components may change with the slope, deck type and classification requested.

E. Sheet Metal

1. Metal flashing products supplied by Mule-Hide (Mule-Hide Metal Accessories) and installed by a Mule-Hide Warranty Eligible Applicator will be covered under a Standard or Premium System warranty.

2. TPO Coated Metal and non-coated metal components such as gravel stops, drip aprons, counterflashings, copings, etc., should be fabricated and installed in accordance ES-1 recommendations and requirements.

3. Sheet metal components supplied by others are not covered by the Mule-Hide warranties. Contact Mule-Hide's Technical Department for specific requirements.

F. Insulation Adhesive

1. Insta-Stik™ - A single component polyurethane, construction grade, low-rise expanding foam adhesive used for attaching approved insulations to concrete, cellular lightweight insulating concrete, gypsum or cementitious wood fiber decks.

2. Weather-Tite One Step® – A **two component**, one-step, all-purpose foamable adhesive that will lock insulation boards into place within 5 – 10 minutes of application in all temperatures.

2.05 Precautions

A. Consult Material Safety Data Sheets and container labels for specific safety instructions prior to use.

B. Avoid breathing vapors of solvents, cleaners, primers, sealants and adhesives. Use with adequate ventilation. Avoid prolonged contact of solvents, sealants, cleaners, primers and adhesives with skin. Solvent resistant rubber gloves should always be worn during use.

C. Do not use Mule-Hide TPO roofing products near fire or flame. Do not use open flames for drying of surfaces, sealants or adhesives. **Do not smoke near flammable products.**

D. Do not use oil-based paint on Mule-Hide TPO Coated Metal or membrane. Contact Mule-Hide's Technical Department for recommendations.

E. Do not allow muriatic acid (masonry cleaner) to come in direct contact with the Mule-Hide TPO Membrane or accessory products.

F. Do not allow Mule-Hide TPO membranes or accessories to come into direct contact with steam or vents that produce temperatures in excess of 160°F (71°C).

G. The Mule-Hide TPO Roof System may be installed in cold weather provided the adhesives are stored at room temperature until just prior to use and used within 2 hours. Adhesives left in the cold must be returned to room temperature prior to use.

H. Cover Tapes may lose tack when exposed to temperatures below 40° F. for extended periods of time. A heat gun may be used to warm the product. Only apply heat to the TPO side. Be careful not to overheat. Hot boxes are the preferred method to warm tapes.

I. In colder temperatures when the ambient temperature is near the dew point, condensation may form on the tape primer and adhesive as the solvents flash off. If condensation occurs, discontinue the application and allow the surface to dry. **Do not attempt to dry the surface with heat guns or torches.** When weather permits apply a new coat of product.

PART 3 - EXECUTION

3.01 General

A. When installing a Fully Adhered Mule-Hide Reinforced TPO Membrane Roofing System in cooler weather, it is recommended that liquids such as solvents, sealants, etc. be stored at warmer temperatures (60°F or more but not exceeding 80°F) until just prior to use in order to facilitate the installation.

3.02 Substrate Conditions

The following general conditions apply to the substrate that will receive a Fully Adhered Mule-Hide TPO

Membrane Roofing System for both new construction and reroof applications:

A. The roof deck must be structurally sound to provide proper securement for mechanical fasteners. Areas showing a loss of integrity due to corrosion, rotting, warping, concrete spalling, etc., must be repaired or replaced prior to installing the roofing system.

B. It is the responsibility of the roofing contractor to perform test cuts at each roof area prior to reroofing. The condition of the substrate must be suitable to receive a Fully Adhered Mule-Hide TPO Roofing System. Wet insulation must be removed and replaced. See Single Ply Roofing Institute's guidelines for determining wet insulation.

C. Contact the material manufacturer when the substrate is exposed to excessively high humidity and/or a corrosive environment. Special fasteners (i.e.- stainless steel) or details may be required.

D. A determination must be made regarding the presence or absence of coal tar pitch within the existing roof assembly when considering a recover of the old roof system. The presence of coal tar pitch requires the use of a 6-mil poly slipsheet under the insulation unless the coal tar pitch is 10 years or older and is separated from the Mule-Hide TPO membrane by a layer of insulation a minimum of 1-1/2" thick having a minimum "R" value of 5.0. All joints must be butted tightly together or have joints completely taped to prevent volatiles from damaging roof membrane.

E. It is acceptable to install a Fully Adhered Mule-Hide TPO Membrane Roofing System over the following deck substrates provided that an acceptable insulation is installed over the substrate as required:

1. Structural Metal Deck (22 gauge minimum) shall conform to recommendations outlined in Factory Mutual's Loss Prevention Data Sheet 1-28 (requires insulation). Contact Mule-Hide's Warranty Department for attachment requirements for decks less than 22-gauge in thickness. All FM testing is based on attachment to a 22-gauge steel deck.

2. Structural concrete and pre-cast, pre-stressed concrete (2,500 psi. minimum) shall be cured and dry to industry standards and surface shall be smooth and free of moisture or frost. All sharp ridges or other projections above the surface shall be removed before roofing. An approved insulation board is recommended. Minimum deck thickness shall be 2 inches with 3 inches preferred due to possible spalling damage that may occur to the underside of the deck when using fasteners for insulation and membrane attachment. Insulation may be attached with Type III or IV hot asphalt, approved adhesive or approved fasteners. The membrane may be adhered directly to structural concrete decks that have been trowel finished and are completely cured (28 day minimum).

3. Lightweight Insulating Concrete Fill and Metal Form work (minimum 24 gauge metal form work) - the roof deck shall be cured and dry to the deck manufacturer's and/or industry standards and shall be smooth and free of ridges and depressions. All necessary venting as recommended by the roof deck manufacturer shall be accomplished. These decks may be acceptable to receive a Fully Adhered Mule-Hide TPO Membrane Roofing System after pullout tests have been completed and appropriate fasteners have been selected. Attachment must be through the insulating concrete into the steel or concrete deck. Insulation board is required. Vapor barriers may be required when installing insulation over new decks.

4. Wood Plank (1" minimum) shall conform to Factory Mutual's requirements for Class 1 impregnated decks (insulation is required). FM approved wood decks

are a minimum, nominal 2-inch thick, tongue and groove planks.

5. Plywood (15/32" minimum) shall be exterior grade (minimum CDX grade). A layer of an approved insulation is required for reroof applications. On new construction, while insulation board is recommended, adhering directly to the plywood or Oriented Strand Board ("OSB") deck is acceptable if the decking is secured with screws or back-out resistant fasteners. Decks attached with common or cement coated nails or staples shall be covered with an approved insulation.

6. Cementitious Wood Fiber Decks - Certain cementitious wood fiber decks may be acceptable to receive a Fully Adhered Mule-Hide TPO Membrane Roofing System after pullout tests have been completed and appropriate fasteners have been selected. This deck type requires an acceptable insulation.

7. Gypsum Concrete Deck - shall be cured and dry to manufacturers' and/or industry standards. The surface of the deck shall be smooth and free from ridges and depressions. Certain gypsum concrete decks may be acceptable to receive a Fully Adhered Mule-Hide TPO Membrane Roofing System after pullout tests have been completed and appropriate fasteners have been selected. This deck type requires an acceptable insulation.

F. For reroofing projects having plywood decks, a minimum of one layer of an approved insulation is required after the tear-off has been completed.

G. Mule-Hide recommends that all roof surfaces have a positive slope to provide adequate drainage. There should not be any ponding water 48 hours after a rainfall.

3.03 Preparation of Existing Substrate

A. General

1. To prevent delays or interruptions, coordinate work with other trades or suppliers to ensure that components to be incorporated into the Fully Adhered Mule-Hide TPO Membrane Roofing System are available as the work progresses. Examine substrates to which the roofing materials are to be applied to ensure that their condition is satisfactory for the Mule-Hide TPO Membrane Roofing System application.

2. Do not permit voids greater than 1/4" wide in the substrate. Concrete substrates shall be cured and free of laitance and curing compounds. Substrates for roofing materials shall be dry and free of oil, dirt, grease, sharp edges and debris. Inspect substrates and correct defects before application of roofing membrane.

3. Specifier or roofing contractor shall determine the condition of the existing roof deck and roofing system. Areas with deteriorated decking, wet insulation or other failed materials shall have those affected materials removed and replaced. Make sure all decking is securely fastened. The roofing contractor has the final responsibility to ensure an acceptable deck is provided to receive the new roof system.

4. Large blisters shall be cut and patched to provide a reasonably level substrate surface.

5. On recover projects, tear off all existing base flashings, cant strips and projection flashings down to the substrate. The flashing substrate shall be dry and free of oil, dirt, grease, sharp edges and debris.

6. Gravel over existing nailers must be totally removed prior to installing new nailers and flashings. Verify that the existing nailers are in good condition and securely anchored to the roof decks.

7. When an additional thickness of insulation is being added, new nailers must be added to match the height of the new insulation. Nailers must be securely anchored to the roof deck per Section 3.05 of this specification.

8. All roof surfaces shall be free of ponded water, ice, or snow. Significant ponding that remains after a period of 48 hours should be eliminated by either installing tapered insulation to create positive drainage of the roof surface or by installing new drains in the low areas where the ponding remains. Positive drainage shall also eliminate the possibility of excessive live loads caused by ponding water that could cause structural damage or failure.

9. When removing an existing roof during reroofing, remove only that amount of roofing and flashing that can be made watertight with new Mule-Hide TPO materials in a one-day period or prior to the onset of inclement weather.

10. Recovering over a gravel surfaced BUR systems require the installation of an acceptable insulation. Loose gravel must be removed. All lead pipe and drain flashings shall be removed.

11. Recovering over a smooth surfaced BUR and smooth Modified Bitumen roofing systems shall require the installation of an acceptable insulation. All lead pipe and drain flashings shall be removed. Single-ply membranes such as EPDM, Hypalon, PVC or CPA must have all existing flashings removed, the field sheet must be cut up into sections no larger than 10' by 10' and an acceptable layer of insulation shall be installed over the existing field membrane.

12. Polyurethane Foam roofing systems ("PUF") are not acceptable for recover applications. The PUF system must be completely removed and new insulation installed prior to the installation of the new TPO Roofing System.

13. If a Mule-Hide Premium warranty is requested, the existing roof system **must be removed to the deck** prior to the installation of the new roofing system or a moisture survey by an independent third party must be taken, all wet areas removed and a copy of the survey submitted to Mule-Hide with the warranty application.

3.04 Vapor Retarder Installation (where specified)

A. Specific climatic and job conditions may require the use of a vapor retarder. It is the sole responsibility of the design professional to determine the need for a vapor retarder, and its type and location in the roofing system. A vapor retarder may often act as an "air barrier" which may have a positive effect in reducing internal air pressure. Vapor retarders should be strongly considered for buildings subject to high internal air pressures such as airplane hangars and buildings with many loading bays such as warehouse facilities.

B. The National Roofing Contractor's Association recommends the installation of vapor retarders when interior relative humidity is 45% or greater and the outside mean average January temperature is below 40° F.

C. Install a vapor retarder over a suitable substrate with all side and end laps and all penetrations sealed in accordance with the manufacturer's instructions. The vapor retarder may be loosely laid or adhered with the manufacturer's recommended adhesive.

In reroofing where the existing built-up roof is to remain, the built-up roof may be an adequate vapor retarder as long as all splits or tears are repaired in order to provide a total barrier to vapor penetration.

3.05 Wood Nailers

A. Wood nailers are required at all roof perimeter edges where metal edging and gutter systems are specified or where indicated in Mule-Hide's published Standard TPO Details.

B. Nailers shall be firmly anchored to the decks at a maximum 2'-0" o.c. and shall resist a pullout force of 200 lbs./linear foot in any direction. A 1/2" vent space shall be provided between adjacent lengths of nailers. Fasteners shall be installed within 6 inches of each end. Spacing and fastener embedment shall conform to Factory Mutual Loss Prevention Data Sheet 1-49.

C. Height of nailers shall match the surface level of the insulation and roof membrane. The width of the wood nailer shall extend beyond the metal flange to prevent damage to the membrane.

D. All woodwork to be reused shall resist a minimum force of 200 lbs/linear foot in any direction and shall be free of rot.

E. Wood nailers with creosote and asphaltic preservatives are not acceptable. Pressure treated lumber is not required on new construction unless specified by the architect.

3.06 Insulation Installation

A. Mule-Hide accepted roof insulations shall be installed in accordance with Mule-Hide specifications.

B. Mule-Hide accepted roof insulations shall be secured to the roof deck in accordance with Mule-Hide's requirements utilizing Mule-Hide fasteners or approved compatible fasteners. An approved low-rise foam adhesive for each layer may be substituted for mechanically fastening through the top layer.

C. All roof insulation shall be neatly cut to fit around all penetrations and projections with a maximum allowable gap of 1/4-inch.

D. Open joints shall be repaired with like insulation material.

E. Insulation shall be feathered or tapered to provide a minimum sump area of 36" x 36" where possible at all drains. Crickets and saddles may be installed beneath the specified insulation where possible. Crickets and saddles made from non-compatible insulations materials must be overlaid with an acceptable insulation or underlayment.

F. Install no more roof insulation in one day than can be covered with the Mule-Hide TPO Membrane or when the onset of inclement weather is anticipated.

G. Insulation installed over steel decks shall be checked so that no edges are left unsupported along the flutes. All insulations shall be of sufficient thickness and density to prevent breakage under normal roof construction traffic.

H. When installing insulation, the end joints of each row of insulation shall be offset against the previous row. When more than one layer of insulation is to be used, succeeding layers are to be laid staggered in relation to the previous layer of insulation and all joints shall be offset.

I. When a Mule-Hide Premium Warranty is requested, only Mule-Hide labeled insulation

may be used unless written approval is obtained, prior to job bid, for an alternative insulation.

J. Insulation other than Mule-Hide labeled insulation must be an FM approved insulation and acceptable to Mule-Hide for use under the Mule-Hide Fully Adhered Roofing System. Refer to the insulation manufacturers guidelines for the appropriate type, size and thickness of the insulation needed for use over the respective substrate and under the Mule-Hide Fully Adhered Roofing System.

K. Mule-Hide's minimum attachment rates shall be as follows:

	Fasteners per 4' x 8' board		
Insulation Type or Overlay	**Field**	**Perimeter**	**Corner**
Approved Polyisocyanurate - Min 2" thick (top layer)	8	12	16
Approved Polyisocyanurate - Min 1.5" up to 2" thick	12	18	24
HD Fiberboard - Min 1/2" thick- Installed over Approved Insulation	16	24	32
Dens Deck Prime - Min 1/4" thick - Installed over Approved Insulation	12	18	24
OSB - Min 7/16" thick - Installed over Approved Insulation	17	25	32
Approved OSB/Polyisocyanurate Composite - Min 2" thick	17	25	32

Contact Mule-Hide's Technical Department for FM approvals and required attachment rates that are determined by deck type, insulation brand, type and thickness. When using multiple layers of insulation or more than one type of insulation, the number of fasteners required per board is determined by the top layer of insulation.

L. Perimeter enhancements

To meet increased uplift requirements in the perimeters and corners of each roof area, additional insulation attachment provisions must be installed as follows:

Perimeters – insulation attachment to be increased 50% over the field attachment requirements with a maximum of one (1) fastener every one (1) square feet.

Corners – insulation attachment to be increased 100% over the field attachment requirements with a maximum of one (1) fastener every one (1) square feet.

1. For Factory Mutual projects, the width of the roof perimeter and corner areas is defined as the smaller of 0.1 times the building lesser plan dimension or 0.4 times the eave height (mean roof height for slopes greater than 2"/12" slope), except for heights greater than 60 ft. The minimum width of the perimeter and corner areas shall not be less than three (3) feet. Contact Mule-Hide Technical Department for Factory Mutual projects exceeding 60 ft. heights.

2. For non Factory Mutual projects, the minimum width of the perimeter and corner areas shall not be less than eight (8) feet.

See Details MHT-UN-108A and MHT-UN-108B

3.07 Membrane Installation

A. General - Unroll the Mule-Hide TPO Membrane and position without stretching. Allow the membrane to relax at least 15 minutes when the temperature is above 60°F, or 30

minutes when the temperature is below 60°F, prior to installation. Inspect and remove any damaged membrane.

B. Membrane should run perpendicular to the direction of steel deck flutes and orientation of wood decks where possible.

C. All membrane overlaps shall be installed to facilitate the flow of water. Seams shall be shingled or run parallel to the flow of water. Backwater seams are not permitted.

D. Lap sheets a minimum of 3 inches to provide space for a continuous, minimum 2” weld. Membrane overlaps shall be shingled with the flow of water or parallel to the flow of water. All welded field seams shall be a minimum of 2 inches wide. End laps shall be overlapped a minimum of 3 inches.

E. The roofing contractor shall check all welded seams for continuity and integrity using a cotter pin puller or other suitable blunt object. The contractor shall make sample test seams each day prior to welding field seams. The contractor shall, using scrap material, run at least two test seams, each a minimum of 2' long. Each test seam shall be used to determine adequate seam strength and to ensure the equipment has warmed up, is operating properly and proper settings have been determined. This should be done each time the equipment is turned on after a cool down period.

F. Perimeter - When installing the Mule-Hide Fully Adhered TPO Roofing membrane system, it is not necessary to install Half Sheets parallel with the perimeter. Full size sheets should be used everywhere practical to minimize the number of field seams. In place of Half Sheets, additional fasteners are installed in the insulation in the perimeter areas as defined in 3.06.L Perimeter Enhancements. Weld all laps (seams and end laps) continuously with a minimum weld width of 2 inches. All field welds shall be completed with an automatic welder. Perimeter areas shall be determined by one of the following methods:

1. Mule-Hide Technical Bulletin TPO-FA01-2006, Standard Fastening Patterns and Guidelines. Mule-Hide defines the minimum perimeter area as 8’ in from the roof edge along all exterior roof edges.

2. For Factory Mutual insured buildings, follow guidelines in FM's Loss Prevention Data Sheet 1-29. Contact Mule-Hide Warranty Department for fastener spacing for compliance with FM 1-60 and 1-90 requirements.

3.08 Field Sheet Attachment

A. General

1. Position membrane over substrate with minimum 3” overlap at lap seams, and positioned so that laps will shed water. Allow the membrane to relax at least 15 minutes prior to fastening when temperatures are 60º F and above or 30 minutes when temperatures are below 60° F. After membrane has relaxed, fold membrane in half lengthwise exposing the underside of the sheet. Pails of adhesive are often used to weight the back edge of the membrane to hold it in position. **CAUTION**: Keep the protective packaging of the Mule-Hide Heat-Weld Membrane intact until ready to use.

B. **TPO Bonding Adhesive, Low VOC Bonding Adhesive, and Low VOC Bonding Adhesive - 1168 (solvent base)**

1. Mix adhesive scraping the sides and bottom of the can (minimum of 5 minutes is required) until adhesive is uniform in color. Consult Product Data Sheet for adhesive instructions.

a. Low VOC Bonding Adhesive and Low VOC Bonding Adhesive – 1168 require mechanical stirring (electric drill), both initially and periodically during application.

2. Using a plastic core, medium nap roller, apply a smooth even coat of TPO Bonding Adhesive to back side of membrane and substrate (no globs or puddles). A nine inch roller will easily fit into a 5-gallon adhesive container. **Do not apply adhesive in area of seam laps.**

3. Coverage rate to be approximately:
   120 square feet per gallon for one surface (membrane or substrate only)
   or
   60 square feet per gallon per finished surface (membrane & substrate)

4. Allow adhesive to dry to a 'tacky' state. Test adhesive by placing a knuckle into it and turning your wrist a one-quarter turn. Adhesive is ready to mate when it is tacky but does not string when knuckle is lifted.

5. Care must be taken to ensure proper drying. Avoid thin areas of adhesive which can result in over drying and improper adhesion.

6. Roll coated membrane onto substrate being careful to not wrinkle the sheet or trap air bubbles. Once membrane is mated to the substrate, thoroughly broom into place with a stiff bristled push broom to ensure proper contact and 100% adhesion. Repeat this procedure for remaining sheets.

C. **WBBA-2000** (Water Based Bonding Adhesive)

1. Mix adhesive thoroughly scraping the sides and bottom of the can (minimum of 5 minutes is required) until adhesive is uniform in color. Consult Product Data Sheet for adhesive instructions.

2. Using a ¼" or $^{3}/_{8}$" nap roller, apply a smooth even coat of WBBA-2000 bonding adhesive to back side of membrane and substrate. **Do not apply adhesive in area of seam laps.**

3. Coverage rate to be approximately:
   120 square feet per gallon for one surface (membrane or substrate only)
   or
   60 square feet per gallon per finished surface (membrane and substrate)

4. Allow adhesive to dry until it turns translucent and does not transfer to a dry finger or pull away from the substrate. WBBA-2000 adhesive will take a longer time to dry. Adhesive must remain tacky.

5. Mate surfaces together avoiding wrinkles. Immediately roll the bonded area of the sheet with a 100 to 150 lbs roller to ensure full contact. It is important to thoroughly roll the membrane over all insulation joints. Repeat this procedure for remaining sheets.

D. Extended drying times can be expected during cool, overcast, humid, shaded, or late day applications. The adhesive must be dry (but still tacky) before mating surfaces to avoid permanent blisters due to trapped moisture. Repeat this procedure for the second half of the sheet and each successive sheet of membrane on the roof, remembering to shingle all laps.

E. Do not run any seams through field drains or sumps. Any seams running through drains shall be cut out and target patches (36” x 36”) shall be installed.

3.09 Welding of Lap Areas

A. General

1. Roofing membrane is to be hot air welded only. Seaming of "membrane to membrane" and "flashing/detail membrane to membrane" shall be by hot air welding only.

2. All surfaces to be welded shall be clean and dry.

B. Hot Air Welding

1. Machines for hot air welding are available from several different sources. Each manufacturer's instructions for use shall be followed, as well as all local codes regarding electric grounding, supply and other related functions. Since most automatic welding machines require 218 to 230 volts, the use of a portable generator on the roof is recommended for greater flexibility. **Mule-Hide requires the use of automatic welding machines for all field sheet seaming. Hand welding is only acceptable for flashings and those seams where the automatic welder cannot be used.**

2. Hand-held welding equipment is also available to weld membrane. After the preheated nozzle tip is applied in the overlap area and the material starts to soften, immediately follow with a silicone hand roller to press the heated membrane surfaces together with slow, even movements. Keep the roller within 1 inch of the nozzle tip. Angle the hot air tool so that the flowing air faces the roller. Seam strength may be tested when cool. For best results, testing seams 8 hours after hot air welding is recommended.

C. “T” Joint Covers

1. **For 45-mil membrane and maximum warranty length of 15-years.** Pay special attention to the “T” lap seams formed where three layers of membrane overlap at a seam. To ensure proper seaming of the “T” joints, the top layer of the Heat-Weld Membrane is creased a minimum of one inch into the lower layer of membrane by using a heat gun with a narrow or pencil tip nozzle and a rubber hand roller. By inserting a heat gun nozzle between the layers of the membrane, the membrane will soften and begin to flow allowing it to crease and seal completely after applying pressure with a hand roller to ensure adequate bonding of the softened material. After heat-sealing the “T” joint, Edge Sealant must be applied on all cut edges of reinforced membrane. See detail MHT-UN-105A.

2. **For membrane thickness greater than 45-mil or warranty length greater than 15-years.** Separate “T” joint patches are required over all “T” joints. See detail MHT-UN-105B

D. Seam Patches at Roof/Wall Transitions

1. Mule-Hide requires the installation of Non-Reinforced TPO Flashing Membrane patches over any seam that transitions from the horizontal to the vertical. These patches are to be constructed with Non-Reinforced TPO Flashing Membrane only and hot air welded. Refer to Mule-Hide Detail MHT-UN-105C

E. Daily Welding Equipment Setup

1. The roofing contractor shall make sample test seams each day prior to welding field seams. The contractor shall, using scrap material, run at least two test seams, each a minimum of 2 feet long. Each test seam shall be used to determine adequate seam strength and to ensure the equipment has warmed up, is operating properly and proper settings have been determined. This should be done each time the equipment is turned on after a cool down period.

F. Quality Control of Seams

1. After seaming, the seams are checked for integrity with a probe. Any openings or "fishmouths" are to be repaired with a hand-held hot air tool fitted with a narrow nozzle tip and with a roller. Each day the contractor shall attempt to pull apart several sections of welded seams to test the quality of the welds. Should the welds be deficient, a more thorough examination of the work performed must be carried out and necessary repairs made.

3.10 Additional Membrane Securement (Base Attachment)

A. Additional securement of the TPO membrane by mechanical attachment must be provided at the perimeter of each roof level, base of walls, curbs, skylights, expansion joints, tie-ins, interior walls, bottom of valleys and any angle changes that exceed inclines of 2:12 (2” rise in 12”) and various penetrations as shown in the Mule-Hide Standard Details. All securement must be either horizontally to the roof deck or vertically to the base of the various penetrations as shown in the Mule-Hide Standard Details.

B. The mechanical attachment of the membrane may be achieved by the following methods:

1. 2.4” Seam Plate and appropriate fasteners through the membrane

a. The 2.4” Seam Plate and appropriate fasteners are placed with the edge of the Seam Plate approximately ½” away from the angle change. Seam Plates may be placed either horizontally or vertically depending on the conditions encountered. Refer to the Mule-Hide TPO Standard Details for proper placement.

2. Mule-Hide All Purpose Bar

a. The Mule-Hide All Purpose Bar is a specially extruded aluminum bar that has pre-punched holes 6 inches on center. Bar may be placed either horizontally or vertically depending on the detail followed. Refer to the Mule-Hide TPO Standard Details for the proper placement. Refer to Mule-Hide Detail # MHT-UN-330 for appropriate placement of the All Purpose Bar.

b. The maximum spacing of the fasteners shall not exceed 12 inches on center. Adjoining bars should be spaced approximately ½ inch to 1 inch apart. All bars must be attached at the ends a maximum of 1 inch from the end of each bar. This may require pre-drilling additional holes. All cut bars shall be deburred.

c. Under no circumstances shall the All Purpose Bar be stripped-in with TPO PS Cover Strip. TPO .045 Reinforced 6” X 100’ product may be used to strip-in the All Purpose Bar with a continuous, minimum of 1-1/2” (40 mm) wide weld.

d. The All Purpose Bar must be installed a minimum of 3 inches to a maximum of 6 inches from inside and outside corners.

3. TPO PS RUSS attachment strip

   a. The RUSS is a 6" wide reinforced strip of TPO membrane that may be installed at the base of walls and curbs. Mule-Hide 2.4 inch Seam Plates are used to attach the RUSS horizontally with appropriate fasteners. Refer to Mule-Hide Detail # MHT-UN-305B for appropriate placement of the RUSS, plates and fasteners. The RUSS attachment strip is installed prior to the placement of the field sheet. The RUSS attachment strip is to be placed on horizontal surfaces only and not turned up the vertical.

   b. Follow the standard procedures for cleaning, applying primer and adhering the RUSS and field sheet. Only Mule-Hide TPO Primer or Low VOC Primer may be used to adhere the RUSS to the field sheet. Bonding Adhesive is **not permitted** for use with the RUSS attachment strips.

   c. Spacing of the fasteners shall not exceed 12 inches on center. Adjoining RUSS attachment strips shall be spaced a maximum of 1 inch apart. It is not required to overlap the RUSS.

   d. For horizontal attachment, the RUSS attachment strip must be placed a maximum of ½ inch from the base of the angle change extending out onto the horizontal surface (roof substrate). The 2.4 inch Seam Plate must be placed a minimum of ½ inch to a maximum of 1 inch from the exterior edge of the strip. Refer to Mule-Hide Detail # MHT-UN-305B. Installation of the plates must be a minimum of 6 inches to a maximum of 9 inches from the inside and outside corners.

4. Drip Apron and Gravel Stop

   a. For drip aprons and gravel stops, the metal flange shall extend a minimum of 3 inches onto the wood nailer. The wood nailer must be wider than the metal flange. Approved screw fasteners shall be installed a maximum of 6 inches on center and ½" to 3/4" from the inside edge of the metal flange. Ring shank nails spaced a maximum of 4" on center may also be used.

   b. Drip aprons and gravel stops not made out of TPO Coated Metal shall be primed with Mule-Hide's TPO Primer or Low VOC Primer and stripped with Mule-Hide's TPO PS Cover Strip. Cleaning the metal with a solvent such as toluene or xylene to remove oil film may be required prior to installing and priming with the TPO Primer. Refer to Mule-Hide detail # MHT-UN-106B.

3.11 Flashing Installation

A. TPO Membrane Flashings

1. All membrane flashings are to be installed concurrently with the roof membrane as the project progresses. Temporary flashings are not allowed without prior written approval from the Mule-Hide Warranty Department. Should any water penetrate the new roofing because of incomplete flashings, the affected areas shall be removed and replaced at the contractor's expense.

2. All surfaces to be fully adhered should be compatible, dry and smooth with no excessive surface roughness.

3. On recover projects, tear off all existing base flashings, cant strips and projection flashings down to the substrate. If deteriorated areas of substrate are uncovered, repairs must be made to provide a suitable substrate for the new TPO flashings.

B. **TPO Bonding Adhesive, Low VOC Bonding Adhesive, and Low VOC Bonding Adhesive - 1168 (solvent base)**

1. Mix adhesive scraping the sides and bottom of the can (minimum 5 minutes is required) until adhesive is uniform in color. Consult product data sheet for adhesive instructions.

   a. Low VOC Bonding Adhesive and Low VOC Bonding Adhesive – 1168 require mechanical stirring (electric drill), both initially and periodically during application.
   b. Porous surfaces and substrates may require the application of a prime coat and second coat of Low VOC Bonding Adhesive and Low VOC Bonding Adhesive – 1168 to accomplish proper adhesion.

2. Using a plastic core, medium nap roller, apply a smooth even coat of TPO Bonding Adhesive to back side of membrane and substrate (no globs or puddles). A nine inch roller will easily fit into a 5-gallon adhesive container. **Do not apply adhesive in area of seam laps.**

3. Coverage rate to be approximately:
   120 square feet per gallon for one surface (membrane or substrate only)
   or
   60 square feet per gallon per finished surface (membrane and substrate)

4. Allow adhesive to dry to a ‘tacky’ state. Test adhesive by placing a knuckle into it and turning your wrist a one-quarter turn. Adhesive is ready to mate when it is tacky but does not string when knuckle is lifted.

5. Care must be taken to ensure proper drying. Avoid thin layers of adhesive which can result in over drying and improper adhesion.

6. Roll coated membrane onto substrate being careful to not wrinkle the sheet or trap air bubbles. Once membrane is mated to the substrate, carefully roll the membrane with a 2-inch wide rubber hand roller to promote maximum positive contact between the membrane and the substrate.

7. TPO Membrane Flashings shall extend a minimum of 6 inches onto the field sheet and be adhered securely. There shall be a minimum of 2 inches between the front of the fastener plates and the edge of the sheet to allow for heat welding. All side laps are to overlap a minimum of 2 inches.

8. **Areas of the flashings and membrane to be welded are not to have Bonding Adhesive applied to them.**

9. Extended drying times can be expected during cool, overcast, humid, shaded, or late day applications. The adhesive must be dry (but still tacky) before mating surfaces to avoid permanent blisters due to trapped solvents.

10. All flashings shall be extended a minimum of 8 inches above roof membrane level and be terminated unless previously accepted by the owner or his representative and the Mule-Hide Technical Department. All flashings shall be hot air welded at their connections with the roofing membrane. Apply Cut Edge

Sealant at all welded edges of cut membrane flashings. Refer to Mule-Hide TPO Standard Details for more information.

NOTE: After flashing is adhered in place, promote full contact adhesion by going back over entire area with a 2-inch rubber hand roller.

C. **WBBA-2000** (Water Base Bonding Adhesive)

1. Mix adhesive scraping the sides and bottom of the can (minimum 5 minutes is required) until adhesive is uniform in color. Consult product data sheet for adhesive instructions.

2. Using a 9” wide, ¼” or 3/8” nap roller, apply a smooth even coat of WBBA-2000 adhesive to back side of membrane and substrate (no globs or puddles). A nine inch roller will easily fit into a 5-gallon adhesive container. **Do not apply adhesive in area of seam laps.**

3. Coverage rate to be approximately:
   120 square feet per gallon for one surface (membrane or substrate only)
   or
   60 square feet per gallon per finished surface (membrane and substrate)

4. Allow adhesive to dry until it turns translucent and does not transfer to a dry finger or pull away from the substrate. WBBA-2000 adhesive will take a longer time to dry. Adhesive must remain tacky.

5. Mate surfaces together avoiding wrinkles. Immediately roll the bonded area of the sheet with a 2-inch wide rubber hand roller to promote maximum positive contact between the membrane and the substrate. Overlap all adjacent flashing sheets a minimum of 2 inches.

6. **Do not apply adhesive in area to be heat-welded.**

7. Extended drying times can be expected during cool, overcast, humid, shaded, or late day applications. The adhesive must be dry (but still tacky) before mating surfaces to avoid permanent blisters due to trapped moisture.

8. Overlap all adjacent flashing sheets a minimum of 2 inches. TPO Membrane Flashings shall extend a minimum of 6 inches onto the field sheet and be adhered securely. There shall be a minimum of 2 inches between the front of the fastener plates and the edge of the sheet to allow for heat welding. All side laps are to overlap a minimum of 2 inches.

9. All flashings shall be extended a minimum of 8 inches above roof membrane level and be terminated unless previously accepted by the owner or his representative and the Mule-Hide Technical Department. All flashings shall be hot air welded at their connections with the roofing membrane. Apply Cut Edge Sealant at all welded edges of cut membrane flashings. Refer to Mule-Hide TPO Standard Details for more information.

   NOTE: After flashing is adhered in place, promote full contact adhesion by going back over entire area with a 2-inch rubber hand roller.

10. All flashings shall be hot air welded at their connections with the roofing membrane. All hand welds shall be a minimum of 1-1/2" wide.

11. All flashings shall be properly terminated according to Mule-Hide's published Standard Details.

NOTE: When using Mule-Hide All-Purpose Bar under Counterflashing to terminate wall flashing or when coping is used, TPO Bonding Adhesive, Low VOC Bonding Adhesive, Low VOC Bonding Adhesive – 1168, or WBBA-2000 Bonding Adhesive may be eliminated when flashing height is 12” - 18” or less, depending on the type of termination. Refer to Mule-Hide’s published Standard TPO Details for additional information.

3.12 Drains, Expansion Joints, Pitch Pans

A. Roof Drains

1. Prepare the surface around each drain to prevent any distortion, tenting, or bridging of the membrane. A smooth transition shall be provided from the roof surface to the surface of the drain bowl/clamping ring.

2. All existing roofing materials and metal flashings shall be removed.

3. Mule-Hide requires the application of one full tube of Water Cut-Off Mastic per drain applied to the drain bowl, under the membrane, where the clamping ring will be seated. This will provide a continuous seal between the membrane and the drain bowl.

4. Do not run field seams through drains or sumps. If sheet layout causes a seam to fall in line with a drain, a target patch (minimum 36” x 36”) shall be required.

B. Expansion Joints

1. Refer to Mule-Hide’s published Standard TPO Details for application methods for flashing expansion joints.

C. Pitch Pans

1. Install and flash pitch pans as indicated in Mule-Hide’s published Standard TPO Details. All pitch pans shall be filled with Thermoplastic Pourable Sealant.

3.13 Walkway Installation

Walkways should be provided in areas where routine rooftop maintenance occurs and in areas where regular rooftop traffic is expected.

A. TPO Walkway Roll Installation

1. Install TPO Walkway Rolls over clean, dry surfaces.

2. Layout areas where TPO Walkway Rolls are to be installed with most of the material being oriented so that it is placed between field seams with each adjacent and abutting section gapped a minimum of 6". Do not install walkway pads over seams.

3. Heat weld the perimeter of the properly positioned TPO Walkway Roll. Check seams for any voids or inconsistencies that might prevent watertightness.

B. Precast Pavers

1. Install precast paver systems acceptable to Mule-Hide over one layer of 6 oz. HP Protection Mat. Contact Mule-Hide for other acceptable slipsheets.

3.14 Temporary Tie-ins

A. Install temporary cutoffs around incomplete edges of roofing assembly at the end of each day's work and when work must be postponed due to inclement weather. Straighten the insulation line using pieces of insulation loosely laid, and seal the Mule-Hide TPO membrane to the deck or existing membrane. Use a heavy application of roof cement at least six inches in width overlaid with an embedded reinforcement on gravel surfaced roofs. Use polyurethane sealant, low rise foam adhesive, or pourable sealer to seal onto single plies, smooth BUR, or modified bitumen roofs. Remove the temporary seals completely when work resumes, cutting out the contaminated membrane. Remove all sealant, contaminated membrane, insulation fillers, etc. from the work area and properly dispose off-site.

End of Section

This specification represents the applicable information available at the time of its publication. Mule-Hide reserves the right to change this information at any time. Contact Mule-Hide or check the Mule-Hide website (www.mulehide.com) for the latest updates regarding changes or modifications to this specification.

MULE-HIDE PRODUCTS CO., INC.
FULLY ADHERED TPO FLEECE BACK & TPO FLEECE BACK PLUS SYSTEM SPECIFICATION

07 54 00/MUL

TABLE OF CONTENTS

PLEASE CONSULT THE MULE-HIDE WEBSITE FOR THE MOST CURRENT INFORMATION AT WWW.MULEHIDE.COM

MULE-HIDE PRODUCTS CO., INC.
FULLY ADHERED TPO FLEECE BACK & TPO FLEECE BACK PLUS
SYSTEM SPECIFICATION

Revised Oct 2013
07 54 00/MUL

PART 1 - GENERAL

1.01 Description

A. Scope:

1. Furnish and install a Mule-Hide Fully Adhered Mule-Hide TPO Fleece Back or Fleece Back Plus Roofing Membrane with flashings and accessories necessary to comprise a roofing system. The Mule-Hide TPO products and accessories shall be installed in strict compliance with current specifications and drawings as published by Mule-Hide Products Co., Inc. (“Mule-Hide”).

2. The Mule-Hide Fully Adhered TPO (Thermoplastic Polyolefin) Fleece Back Membrane Roof System utilizes a 45-mil (.045 inch), 60-mil (.060 inch) or 80-mil (.080 inch) thick reinforced membrane laminated to a 0.055" thick non-woven polyester fleece backing for a total sheet thickness of either 100 mils or 115 mils.. The TPO Fleece Back membrane is fully adhered to the substrate with WBBA 2000 adhesive.

   The Mule-Hide Fully Adhered TPO (Thermoplastic Polyolefin) Fleece Back Plus Membrane Roof System utilizes a 45-mil (.045 inch), 60-mil (.060 inch) or 80-mil (.080 inch) thick reinforced membrane laminated to a special 10 oz/yd^2 stain resistant, asphalt compatible, polyester fleece backing for a total sheet thickness of either 120 mils, 135 mils, or 155 mils. The TPO Fleece Back Plus membrane is fully adhered to the substrate with hot asphalt.

   With both Fleece Back and Fleece Back Plus membranes adjoining sheets are overlapped a minimum of 3 inches and welded with a robotic welder. End laps are butted together and stripped in with standard reinforced TPO-c membrane. The field membrane is secured at all changes in plane greater than 2” per foot. Note: All membrane thicknesses listed in this specification are nominal thicknesses.

B. Related Work:

The work includes, but is not necessarily limited to the installation of:

1. Vapor Retarder (where specified)
2. Wood Blocking (Nailers)
3. Insulation
4. Slip Sheet (where required)
5. Fasteners
6. Roof Membrane
7. Roof Membrane Flashings
8. Metal Flashings
9. Adhesives
10. Sealants
11. Walkways

Note: Mule-Hide recommends adherence to industry standards (SMACNA) for the installation of any metalwork.

1.02 Quality Assurance

A. The Mule-Hide TPO Fleece Back or Fleece Back Plus Membrane Roofing System shall be installed by an independent roofing contractor eligible (Warranty Eligible) to apply for Mule-Hide "System Warranties" when Standard System or Premium System Warranties are requested.

B. There shall be no deviations from this specification or the Mule-Hide Products Co., Inc. ("Mule-Hide") standard details without prior written approval from Mule-Hide's Warranty Department.

C. Upon completion of the installation according to the terms and conditions stated in this specification and in accordance to the information given in the Warranty Application and Pre-Job survey form and any additional approvals which might have been given by Mule-Hide, an authorized representative of Mule-Hide shall perform an on-site inspection of the roof to verify that all installation and material requirements have been met.

Note: Inspections are only conducted on projects where a "System Warranty" is requested. Inspections are not conducted on projects not requiring a Mule-Hide Warranty or when only a "Roofing Membrane Limited Warranty" is requested. The sole purpose of an inspection by a Mule-Hide Representative is not to be a final inspection for the benefit of the Building Owner/Owner's Representative. It is for the benefit of Mule-Hide to determine if a warranty may be offered for the project.

D. Mule-Hide reserves the right to reject any roof system and refuse to issue any warranty on roofs which do not comply with Mule-Hide's specifications or current policies.

1.03 Submittals

A. Prior to the time of bidding, the roofing contractor shall submit to the Owner or Owner's representative the following items:

1. Copies of Mule-Hide specifications and published product data.
2. Samples of each material to be used in the roof system.
3. Specimen copy of Mule-Hide Products Co. warranty
4. Dimensioned shop drawings to include an outline of the roof and appropriate details for flashings and terminations.
5. Certification from insulation, roofing and accessory components manufacturers that all materials supplied comply with identified ASTM and industry standards.
6. Verification that system specifications meet all identified code and insurance requirements including but not limited to the following:

   a. Factory Mutual Research Laboratories
      Norwood, MA

   b. Underwriters Laboratories
      Northbrook, IL

   Note: It is the Building Owner/Owner's Representative's responsibility to determine what submittals are required for the project.

B. Submit to Mule-Hide, prior to the job start, a Heat-Weld System Warranty Application to be reviewed by the Mule-Hide Warranty Department to determine the acceptability of the project based on the information provided.

1. The Heat-Weld System Warranty Application ("Warranty Application") must be completely filled out and should be accompanied with a copy of the written roof

specification (if available). Also included should be any requests for deviations to Mule-Hide's standard published specification and details.

2. A roof drawing shall be submitted with the Warranty Application indicating all dimensions and locations of all penetrations.

1.04 Product Delivery, Storage and Handling

A. All products delivered to the job site shall be in their original unopened containers or wrappings and clearly labeled with the manufacturer's name, product identification and date of manufacture.

B. Protect all materials from damage during transit, storage and delivery to the job site. Place all materials on pallets and protect from moisture.

C. Store all materials in a dry, clean area protected from the elements. All rolls of membrane shall be stored flat on pallets.

D. All adhesive and caulking shall be stored at temperatures between 60°F and 80°F. Materials exposed to lower temperatures affect the workability and performance of the product. Products shall be restored to the above temperature prior to use.

E. All flammable materials shall be stored in a cool, dry area away from open flames and sparks. Follow precautions outlined on containers or supplied by the material manufacturer/supplier.

F. All materials determined as being damaged (confirmed by Mule-Hide) due to improper storage on the job site are to be replaced with new materials.

1.05 Job Conditions

A. This specification shall not be considered applicable without the appropriate additional specifications approved by Mule-Hide if it should be determined that any of the following conditions exist:

1. The installation of any Mule-Hide Roof System is in a coastal area or high wind zone.

2. If the Mule-Hide Roof System should exceed the structural load conditions as determined by an architect or Engineer.

3. When chemical or hazardous materials are discharged onto the Mule-Hide Roof System.

B. Mule-Hide TPO roofing materials may be installed in temperatures below 40° F but only after consultation with the Mule-Hide Technical Department as special precautions or procedures may be necessary. The performance of the materials, installation costs and production rates may be affected.

C. The General Contractor or the building owner shall be responsible for providing adequate surfaces and structures to receive the insulation, Mule-Hide Roof System and related sheet metal necessary for the successful completion of the project.

D. Only as much new roofing as can be made watertight each day shall be installed each day. This includes all flashing work.

E. All substrates to receive new insulation, membrane or flashing shall be thoroughly dry. Should surface moisture occur, the contractor shall provide adequate equipment to dry

the substrate prior to application of new materials.

F. Prior to and during application, all dirt, debris and dust shall be removed from surfaces to be roofed for both new and reroofing substrates.

G. On all projects where the Fully Adhered TPO Fleece Back or Fleece Back Plus system is specified, it is the responsibility of the independent roofing contractor to have the owner or owner's representative verify the condition of the deck or substrate and to confirm the roof deck can withstand the additional load.

H. Precautions shall be taken to prevent wind blow-off or wind damage during the course of the roofing application. This may necessitate additional securement of temporary construction, materials and equipment.

I. The contractor shall verify and ensure that all roof drain lines are unblocked before starting work. Any blockages found shall be reported to the owner's representative and Mule-Hide's Warranty Department in writing.

J. Temporary waterstops shall be installed at the end of each day's work. Temporary waterstops shall be removed at the start of the next day's work and disposed of properly. Waterstops shall be compatible with all materials.

K. Do not install the Mule-Hide TPO Roofing Membrane in direct contact with any product containing coal tar pitch, creosote or penta-based materials. Consult the Mule-Hide Technical Service Department for special installation requirements.

L. Do not allow contaminants such as petroleum, grease, acid, solvents, vegetable or mineral oil, animal oil, animal fat, etc. or direct steam venting to come into direct contact with the Mule-Hide TPO Roofing Membrane. Contact the Mule-Hide Technical Service Department for recommendations if such conditions exist.

M. The contractor shall follow and comply with all safety regulations as recommended by OSHA.

N. All work shall be scheduled and executed without exposing interior building areas to the effects of inclement weather. The existing building and its contents shall be protected against all risks.

O. Arrange work sequence to avoid use of newly constructed roofing for storage, walking surfaces and equipment movement. Contractor shall provide all necessary protection and barriers to segregate the work areas and prevent damage to adjacent areas. If excessive traffic over newly installed membrane is necessary, contractor shall provide plywood or polyester felt protection to prevent damage. All damaged materials shall be replaced with new materials.

P. All existing roofing materials to be removed for construction shall be immediately removed from the construction site to a dumping area authorized to receive such debris. Any hazardous materials such as asbestos or materials containing asbestos fibers shall be removed and disposed of in accordance with applicable City, State and Federal requirements.

Q. Any unusual or concealed condition discovered during the course of the work is to be reported to the owner and Mule-Hide immediately in writing. Work is to be halted until the owner has responded with a solution to the problems.

R. All local building codes and requirements should be followed where applicable. It is the roofing contractor's sole responsibility to determine and ensure that the roofing system selected complies with all local codes and requirements.

S. Both interior and exterior building areas affected by construction shall be cleaned up and any damaged areas shall be repaired to the owner's satisfaction.

T. Certain project conditions may require modifications to this specification. Contact the Mule-Hide Warranty Department if any of the following conditions exist:

1. Roof heights greater than 100 feet.

2. Geographical location in a 100 mph or greater wind zone, per the ANSI 100 year mean recurrence interval wind isotach.

3. Location with a D exposure as determined in ANSI A58.1

U. When using heat-welding equipment, always review the equipment manufacturer's instructions, precautions and warnings.

V. Consideration should be given in the project design to problems that can precipitate from the smooth surface characteristic of the Mule-Hide TPO membrane

1.06 Warranties

All Mule-Hide warranties are available for commercial projects. A Roofing Membrane Limited Warranty for a maximum of 10 years is available for residential projects.

A. Mule-Hide's Roofing Membrane Limited Warranty

Mule-Hide offers a 10, 15, or 20-year Roofing Membrane Limited Warranty ("Warranty") for a charge. The Warranty covers only the Mule-Hide TPO membrane (or portion thereof) determined by Mule-Hide to be defective and resulting in roof leaks. This Warranty does not cover workmanship or other components not supplied by Mule-Hide. Mule-Hide does not perform inspections of the installation before issuing the Roofing Membrane Limited Warranty. A Mule-Hide Warranty Application and the appropriate fee must be submitted to Mule-Hide to obtain this warranty. Proof of purchase may be required.

Note: Projects requesting a 20-year Roofing Membrane Limited Warranty require the use of a minimum 60-mil (.060 inch) thick TPO membrane (not including fleece) and shall incorporate additional design enhancements as outlined in the 20-year Design Enhancements for Fully Adhered TPO Fleece Back or Fleece Back Plus Roofing System Specification. Mule-Hide recommends that Warranty Applications be submitted for review prior to bidding the project.

B. Mule-Hide's Standard System Warranty

Mule-Hide offers a 10, 15, or 20-year Standard System Warranty ("Standard") for commercial projects for a charge. The Standard warranty is a "No Dollar Limit", labor and material warranty that covers the Mule-Hide labeled membrane and other components supplied by Mule-Hide installed by a Mule-Hide Warranty Eligible Applicator. The Standard warranty does not cover insulation or its attachment system. Metal flashing components not supplied by Mule-Hide are not covered under this warranty. A Mule-Hide Warranty Eligible Applicator must submit a Warranty Application and the appropriate fee to Mule-Hide. Standard warranties require inspections by a Mule-Hide representative.

Note: Projects requesting a 20-year Standard System Warranty require the use of a minimum 60-mil thick TPO membrane (not including fleece) and shall incorporate additional design enhancements as outlined in the 20-year Design Enhancements for

Fully Adhered TPO Fleece Back or Fleece Back Plus Roofing System Specification. Mule-Hide recommends that Warranty Applications be submitted for review prior to bidding the project.

C. Mule-Hide Premium System Warranty

Mule-Hide offers a 10, 15, or 20-year Premium System Warranty ("Premium") for commercial projects for a charge. The Premium warranty is a "No Dollar Limit", labor and material warranty that covers the Mule-Hide labeled membrane, insulation, other components supplied by Mule-Hide and approved products (such as insulation adhesive or other pre-approved accessories) installed by a Mule-Hide Warranty Eligible Applicator. A Mule-Hide Warranty Eligible Applicator must submit a Warranty Application and the appropriate fee to Mule-Hide. Premium warranties require inspections by a Mule-Hide representative.

Note: Projects requesting a 20-year Premium Warranty require the use of a minimum 60-mil thick TPO membrane (not including fleece) and shall incorporate additional design enhancements as outlined in the 20-year Design Enhancements for Fully Adhered TPO Fleece Back or Fleece Back Plus Roofing System Specification. Mule-Hide recommends that Warranty Applications be submitted for review prior to bidding the project.

D. Metal flashing products supplied by Mule-Hide (Mule-Hide Metal Accessories) and installed by a Mule-Hide Warranty Eligible Applicator will be covered under a Standard or Premium System warranty.

E. Standard and Premium System warranties are not available for residential projects.

F. TPO tie-ins to built-up (BUR) or any other type of roof system are not covered by Mule-Hide warranties.

G. Contact Mule-Hide for other extended warranties that may be available.

H. Terms and Conditions of Warranties

Mule-Hide's obligations under the Roofing Membrane Limited Warranty, the Standard System Warranty, and the Premium System Warranty are limited to the specific terms and conditions of the respective Warranties. Sample copies of the Mule-Hide Warranties are available from Mule-Hide upon request.

PART 2 - PRODUCTS

2.01 General

A. The components of the Fully Adhered Mule-Hide TPO Fleece Back or Fleece Back Plus Membrane Roof System are to be products manufactured or supplied by Mule-Hide Products Co., Inc.

B. Components other than those supplied or manufactured by Mule-Hide may be submitted for review and acceptance by Mule-Hide's Warranty Department. Mule-Hide's acceptance of any other product is based solely on chemical compatibility and published performance data provided by the component manufacturer. Other components may be considered on a job-by-job basis and must be approved in writing by Mule-Hide's Warranty Department. Mule-Hide offers no warranty or guarantee for the performance or suitability of any component not supplied or manufactured by Mule-Hide.

2.02 Roofing Membrane

The Mule-Hide Reinforced TPO-c Fleece Back Membrane is available in 100 mils (FB-45), 115 mils (FB-

60), or 115 mils (FB-80) total thickness. The Mule-Hide TPO-c membrane is a polyester scrim reinforced thermoplastic polyolefin roofing membrane that meets and exceeds the requirements of ASTM D6878 Standard Specification for Thermoplastic Polyolefin Based Sheet Roofing, and has been laminated to a 0.055" non-woven polyester fleece backing. Refer to the Product Data Sheets for physical properties and additional information.

The Mule-Hide Reinforced TPO-c Fleece Back Plus Membrane is available in 120 mils (FBP-45), 135 mils (FBP-60), or 155 mils (FBP-80) total thickness. The Mule-Hide TPO-c membrane is a polyester scrim reinforced thermoplastic polyolefin roofing membrane that meets and exceeds the requirements of ASTM D6878 Standard Specification for Thermoplastic Polyolefin Based Sheet Roofing, and has been laminated to a special 10 oz/yd^2 stain resistant, asphalt compatible non-woven polyester fleece backing. Refer to the Product Data Sheets for physical properties and additional information.

The Mule-Hide Reinforced TPO-c Membrane is available in 45 mils (.045 inch), 60 mils (.060 inch), or 80 mils (.080 inch) thick and is used for flashings in a TPO Fleece Back or Fleece Back Plus roofing system. The thickness of the TPO-c flashing membrane shall match the TPO thickness of the Fleece Back or Fleece Back Plus membrane. The Mule-Hide TPO-c membrane is a polyester scrim reinforced thermoplastic polyolefin roofing membrane that meets and exceeds the requirements of ASTM D6878 Standard Specification for Thermoplastic Polyolefin Based Sheet Roofing. Refer to the Product Data Sheets for physical properties and additional information.

2.03 Accessory Materials

The following Mule-Hide materials must be used to install Mule-Hide Roof Systems. Mule-Hide will not warrant any application where another manufacturer's product is substituted for a Mule-Hide product. **All products listed below are physically and chemically compatible with each other.**

A. Mule-Hide TPO Bonding Adhesive - A solvent-based rubberized adhesive used for bonding Mule-Hide TPO-c Membrane to various vertical substrates. Mule-Hide TPO Bonding Adhesive is a two-surface contact adhesive that is applied to both the underside of the membrane and substrate surface. This product may be used with TPO field membrane and flashing membrane. Adhesive is compatible with polyisocyanurate, wood fiberboard insulations, fiberglass-faced gypsum panels, concrete, masonry, metal and wood surfaces. This adhesive is to be used for flashings only and not to adhere the Fleece Back or Fleece Back Plus membrane.

B. Mule-Hide Low VOC Bonding Adhesive - A high strength solvent-based contact adhesive that allows bonding of TPO membrane to various porous and non-porous substrates. It is specially formulated using a blend of VOC exempt and non-exempt solvents to be meet the < 250 g/l VOC content requirements of the OTC Model Rule for Single Ply Roofing Adhesives. This adhesive is to be used for flashings only and not to adhere the Fleece Back or Fleece Back Plus membrane.

C. Mule-Hide Low VOC Bonding Adhesive - 1168 – A high strength solvent-based contact adhesive that allows bonding of TPO membrane to various porous and non-porous substrates. It is specially formulated using a blend of VOC exempt and non-exempt solvents to be meet the < 250 g/l VOC content requirements of the OTC Model Rule for Single Ply Roofing Adhesives. **This product COMPLIES with the following California counties' VOC regulations:** Alameda, Contra Costa, El Dorado, Los Angeles, Marin, Napa, Orange, Riverside, Sacramento, San Bernardino, San Diego, San Francisco, San Mateo, Santa Clara, Solano, Sonoma, and Tehama. This adhesive is to be used for flashings only and not to adhere the Fleece Back or Fleece Back Plus membrane.

D. Mule-Hide WBBA-2000 – A water base adhesive used to bond Mule-Hide TPO Fleece Back membrane to various substrates and insulation boards. WBBA-2000 is applied as a two-sided contact adhesive when used with standard (non-fleece back) TPO membranes, or as a single-side, wet lay-in adhesive when used with Mule-Hide Fleece Back TPO membrane. WBBA-2000 is to be used for adhering Fleece Back membrane only and not

approved for use to adhere Fleece Back Plus membrane.

E. Mule-Hide TPO Primer - A high-solids-content, clear (translucent color), polymer-based splice primer used to prepare TPO membrane for improved adhesion to pressure-sensitive TPO accessories such as: RUSS Strips, TPO Pressure Sensitive Cover Strips, Uncured Flashing Tapes and Cured Cover Tapes. Mule-Hide TPO Primer is required to prepare TPO membrane surfaces prior to the application of any pressure sensitive Mule-Hide accessories.

F. Mule-Hide Low VOC Primer - a solvent-based product designed to prepare TPO membrane for improved adhesion to pressure-sensitive TPO accessories such as: RUSS Strips, TPO Pressure Sensitive Cover Strips, Uncured Flashing Tapes and Cured Cover Tapes. This Low-VOC product is ideal for use in states where VOC content is a concern.

G. Mule-Hide TPO Flashing - a non-reinforced, .060-inch thick material primarily used to seal details where field fabrication is necessary, such as drain details, pipe flashings, pitch pocket flashings, seaming joints of the Mule-Hide TPO Coated Metal, and any place where reinforced membrane is not practical.

H. Mule-Hide TPO Universal Corners - .060-inch thick pre-molded, non-reinforced TPO material. They are uniform in shape and size and provide water tightness at corners formed by TPO coated metal and flashing membrane. They provide a neat, finished look to building corners, curbs and parapet flashings with no cutting or stretching required. Universal Corners are available in white only.

I. Mule-Hide TPO Outside Corners – are pre-molded and are used for flashing outside corners on a variety of details. Installation is fast and easy with no cutting or stretching required. TPO Outside Corners are available in white, gray, and tan.

J. Mule-Hide TPO Inside Corners – are pre-molded and are used for flashing inside corners on a variety of details. Installation is fast and easy with no cutting or stretching required. TPO Inside Corners are available in white, gray, and tan.

K. Mule-Hide Weathered Membrane Cleaner - Used to clean in-service TPO-c membrane prior to the welding process. This cleaner helps to loosen and remove dirt and other contaminants from the surface of the TPO-c membranes and leaves a suitable surface for welding or the subsequent application of TPO Primer.

L. Mule-Hide TPO Pipe Seal - An injection molded, pre-formed flashing for pipes made of Mule-Hide non-reinforced TPO material. They are designed to add ease to the installation process while offering increased watertight security and improved aesthetics. TPO Pipe Seals are designed as an economical flashing for single pipe penetrations on Mule-Hide TPO-c Membrane roof systems. The TPO Pipe Seals can be used wherever the TPO Pipe Seals may be slipped over the top of the pipe.

M. Mule-Hide TPO T-Joint Cover - 60-mil non-reinforced flashing cut into a 4.5” diameter circle used to seal step-offs at splice intersections. Installation is mandatory on all 60-mil and 80-mil TPO systems and on all jobs warranted longer than 15 years.

N. Mule-Hide TPO Coated Metal – 24-gauge, galvanized steel to which is laminated 35 mils (.035" thick) of Mule-Hide non-reinforced TPO Membrane used for flashing and edge metal detailing.

O. Mule-Hide All-Purpose Bar ("A-P Bar") - an extruded aluminum bar, 50 mils (.050") thick, used to terminate adhered, reinforced membrane vertical flashings in certain constructions. Mule-Hide A-P Bar may also be used to anchor the field sheet at the base of vertical angle changes.

P. Membrane Fasteners and Discs - Mule-Hide offers a variety of membrane fasteners and discs to meet specific job conditions and substrates.

Q. Mule-Hide Thermoplastic Pourable Sealant - a one-component thermoplastic sealant for use in pitch pockets.

R. Mule-Hide TPO .045 Reinforced 6” X 100’ – used for stripping-in TPO Coated Metal and as cover strips over TPO Coated Metal joints.

S. Mule-Hide TPO Cut Edge Sealant – A solvent-based, liquid sealant used to seal the cut edge of the Mule-Hide TPO Membrane.

T. Mule-Hide TPO Walkway Rolls – a 1/8-inch thick embossed TPO membrane available in rolls (34" x 50’) having a herringbone traction surface. Walkway Rolls are trimmed in safety yellow along the length of the sheet to better define the walkway area. Walkway Rolls may be welded directly to the TPO roofing membrane. The yellow edges are smooth without safety lugs to allow for easier welding. Walkway Rolls are available in White and Gray colors.

U. Mule-Hide Insulation - Mule-Hide Poly ISO polyisocyanurate insulation (flat or tapered) is a closed-cell polyisocyanurate foam core laminated to heavy, black (non-asphaltic) glass fiber reinforced felt facers.

V. Mule-Hide HP Protective Mat - A nominal 6.0-ounce per square yard (140 grams per square meter) UV resistant polypropylene needle punched fabric. It can be used above the membrane as a slipsheet for protection from damage by materials placed on top of the membrane.

2.04 Related Materials By Others

A. Wood Nailers

1. Nailers shall be #2 or better lumber. Creosote and asphaltic preservatives are not acceptable. Pressure treated lumber is not required on new construction unless specified by the architect.

2. Wood nailers shall conform to Factory Mutual's Loss Prevention Data Sheet 1-49.

3. Wood nailers shall be installed as specified on the project drawings and shall be of a height sufficient to match the thickness of the insulation being used.

B. Vapor Retarders

1. Vapor retarders shall meet specified codes and insurance requirements.

2. Vapor retarders shall be compatible with insulation and other accessories.

3. The use and placement of a vapor retarder should be determined by an architect or engineer. Mule-Hide does not require the use of vapor retarders. However, Mule-Hide recommends that a vapor retarder be considered when both of two conditions are anticipated:

a. The outside average January temperature is below 40°F, and

b. The expected interior winter relative humidity is 45% or greater.

4. Mule-Hide must be contacted for buildings that are refrigerated (freezers or cold storage) or have a high interior humidity such as, but not limited to, swimming pools, produce storage or locker rooms.

C. Insulation

1. Insulation shall be installed as a protection layer over the existing substrate or to obtain a desired thermal value.

2. Insulation shall be compatible with the Mule-Hide TPO Membranes, Mule-Hide Adhesives, Mule-Hide TPO Flashings and other Mule-Hide Accessories.

3. The following insulation boards are acceptable for use with a fully adhered fleece back roofing system when a standard warranty is requested:

a. Polyisocyanurate insulations having non-asphaltic facers (foil facers are not acceptable) meeting the physical property requirements of Fed. Spec HH-I-1972 and having a minimum compressive resistance of 18 psi. Thickness minimum is 1.0" or greater as required by insulation manufacturer to span steel deck flutes.

b. High Density Wood Fiberboard - may be used as an overlay over other insulations. 1/2-inch thick is the minimum requirement when used as an overlay. Mule-Hide requires a minimum 1-inch thick board when installing directly over steel decks. Wood and concrete decks require a minimum 1/2-inch thick board. Minimum thicknesses and attachment rates will vary with wind requirements and deck types.

c. Expanded Polystyrene. Density of boards must be 1.0 PCF certified minimum and meeting ASTM C578, Type II physical properties. Minimum thickness shall be 1.0 inch. When installing directly over a steel deck the minimum thickness shall be as required by insulation manufacturer to span flutes. An overlay of a minimum 1/2" thick HD Wood Fiberboard, minimum 1" polyisocyanurate insulation, minimum ¼” DensDeck, or minimum ¼” Securock is required. Check local building codes as a layer of gypsum board may be required under the EPS insulation (on steel decks).

d. Extruded polystyrene meeting ASTM C578, Types IV, VI or VII physical properties. An acceptable insulation shall be required over the extruded polystyrene. Minimum thickness shall be as required by insulation manufacturer to span steel deck flutes. An overlay of a minimum 1/2" thick HD Wood Fiberboard, minimum 1" polyisocyanurate insulation, minimum ¼” DensDeck, or minimum ¼” Securock is required. Check local building codes as a layer of gypsum board may be required under the extruded insulation (on steel decks).

e. Perlite Insulation – Perlite is not an acceptable insulation. Perlite may only be used as a fill insulation under an approved insulation. The TPO membrane cannot be adhered directly to perlite insulation.

f. Dens Deck Prime or Securock - A minimum 1/4" thick layer of Dens Deck Prime or Securock may be used as an overlay over an approved insulation or as a thermal barrier over a combustible deck.

g. State and local building codes should be reviewed regarding the installation of expanded or extruded polystyrene insulation directly over a steel deck.

4. Insulation manufacturer shall provide its recommendations for use and attachment to the owner with a copy sent to Mule-Hide's Warranty Department. In addition, the insulation manufacturer shall provide a copy of their specific warranty conditions.

5. Mule-Hide Premium Warranties require the use of the Mule-Hide labeled insulation or insulation by an approved Mule-Hide manufacturer. Use of other insulations may disqualify the project for consideration of the issuance of a Premium warranty. Contact the Mule-Hide Technical Service Department for specific requirements.

D. UL and FM Approved Assemblies

Contact Mule-Hide Technical Department for proper insulated assemblies when projects require compliance with UL or FM requirements. The components may change with the slope, deck type and classification requested.

E. Sheet Metal

1. Metal flashing products supplied by Mule-Hide (Mule-Hide Metal Accessories) and installed by a Mule-Hide Warranty Eligible Applicator will be covered under a Standard or Premium System warranty.

2. TPO Coated Metal and non-coated metal components such as gravel stops, drip aprons, counterflashings, copings, etc., should be fabricated and installed in accordance ES-1 recommendations and requirements.

3. Sheet metal components supplied by others are not covered by the Mule-Hide warranties. Contact Mule-Hide's Technical Department for specific requirements.

F. Insulation Adhesive

1. Insta-Stik™ - A single component polyurethane, construction grade, low-rise expanding foam adhesive used for attaching approved insulations to concrete, cellular lightweight insulating concrete, gypsum or cementitious wood fiber decks.

2. Weather-Tite One Step® – A **two component**, one-step, all-purpose foamable adhesive that will lock insulation boards into place within 5 – 10 minutes of application in all temperatures.

G. Asphalt

1. ASTM Type III, IV, or Modified asphalt - Used to adhere the Mule-Hide TPO Fleece Back Plus membrane to various substrates.

2.05 Precautions

A. Consult Material Safety Data Sheets and container labels for specific safety instructions prior to use.

B. Avoid breathing vapors of solvents, cleaners, primers, sealants and adhesives. Use with adequate ventilation. Avoid prolonged contact of solvents, sealants, cleaners, primers and adhesives with skin. Solvent resistant rubber gloves should always be worn during use.

C. Do not use Mule-Hide TPO roofing products near fire or flame. Do not use open flames for drying of surfaces, sealants or adhesives. **Do not smoke near flammable products.**

D. Do not use oil-based paint on Mule-Hide TPO Coated Metal or membrane. Contact Mule-Hide's Technical Department for recommendations.

E. Do not allow muriatic acid (masonry cleaner) to come in direct contact with the Mule-Hide TPO Membrane or accessory products.

F. Do not allow Mule-Hide TPO membranes or accessories to come into direct contact with steam or vents that produce temperatures in excess of 160°F (71°C).

G. The Mule-Hide TPO Fleece Back Roof System must be installed in temperatures 40 degrees (F) and rising for 48 consecutive hours to prevent the WBBA-2000 from freezing before fully curing.

H. The Mule-Hide TPO Fleece Back Plus Roof System may be installed in colder temperatures as long as the asphalt is kept within 25 degrees of its EVT at the point of application.

I. Cover Tapes may lose tack when exposed to temperatures below 40° F. for extended periods of time. A heat gun may be used to warm the product. Only apply heat to the TPO side. Be careful not to overheat. Hot boxes are the preferred method to warm tapes.

J. In colder temperatures when the ambient temperature is near the dew point, condensation may form on the tape primer and adhesive as the solvents flash off. If condensation occurs, discontinue the application and allow the surface to dry. **Do not attempt to dry the surface with heat guns or torches.** When weather permits apply a new coat of product.

PART 3 - EXECUTION

3.01 General

A. When installing a Fully Adhered Mule-Hide TPO Fleece Back or Fleece Back Plus Membrane Roofing System in cooler weather, it is recommended that liquids such as adhesives, solvents, sealants, etc. be stored at warmer temperatures (60°F or more but not exceeding 80°F) until just prior to use in order to facilitate the installation.

Fleece Back membrane must be installed in temperatures of 40 degrees (F) and rising for 48 consecutive hours to prevent the WBBA-2000 from freezing until fully cured.

3.02 Substrate Conditions

The following general conditions apply to the substrate that will receive a Fully Adhered Mule-Hide TPO Fleece Back or Fleece Back Plus Membrane Roofing System for both new construction and reroof applications:

A. The roof deck must be structurally sound to provide proper securement for mechanical fasteners. Areas showing a loss of integrity due to corrosion, rotting, warping, concrete spalling, etc., must be repaired or replaced prior to installing the roofing system.

B. It is the responsibility of the roofing contractor to perform test cuts at each roof area prior to reroofing. The condition of the substrate must be suitable to receive a Fully Adhered Mule-Hide TPO Fleece Back or Fleece Back Plus Roofing System. Wet insulation must be removed and replaced. See Single Ply Roofing Institute's guidelines for determining wet insulation.

C. Contact the material manufacturer when the substrate is exposed to excessively high

humidity and/or a corrosive environment. Special fasteners (i.e.- stainless steel) or details may be required.

D. A determination must be made regarding the presence or absence of coal tar pitch within the existing roof assembly when considering a recover of the old roof system. The presence of coal tar pitch requires the use of a suitable slipsheet under the insulation unless the coal tar pitch is 10 years or older and is separated from the TPO membrane by a layer of insulation a minimum of 1-1/2 inches thick having a minimum "R" value of 5.0. All joints must be butted tightly together or have the joints completely taped to prevent volatiles from damaging the roof membrane.

E. It is acceptable to install a Fully Adhered Mule-Hide TPO Fleece Back or Fleece Back Plus Membrane Roofing System over the following deck substrates in new construction, provided that an acceptable insulation is installed over the substrate as needed:

1. Structural Metal Deck (22 gauge minimum) shall conform to recommendations outlined in Factory Mutual's Loss Prevention Data Sheet 1-28 (requires insulation). Contact Mule-Hide's Warranty Department for attachment requirements for decks less than 22-gauge in thickness. All FM testing is based on attachment to a 22-gauge steel deck.

2. Structural concrete and pre-cast, pre-stressed concrete (2,500 psi. minimum) shall be cured and dry to industry standards and surface shall be smooth and free of moisture or frost. All sharp ridges or other projections above the surface shall be removed before roofing. An approved insulation board is recommended. Minimum deck thickness shall be 2 inches with 3 inches preferred due to possible spalling damage that may occur to the underside of the deck when using fasteners for insulation and membrane attachment. Insulation may be attached with Type III or IV hot asphalt, approved adhesive or approved fasteners. The TPO Fleece Back or Fleece Back Plus membrane may be adhered directly to structural concrete decks that have been trowel finished and are completely cured (28 day minimum).

3. Lightweight Insulating Concrete Fill and Metal Form work (minimum 24 gauge metal form work) - the roof deck shall be cured and dry to the deck manufacturer's and/or industry standards and shall be smooth and free of ridges and depressions. All necessary venting as recommended by the roof deck manufacturer shall be accomplished. These decks may be acceptable to receive a Fully Adhered Mule-Hide TPO Fleece Back or Fleece Back Plus Membrane Roofing System after pullout tests have been completed and appropriate fasteners have been selected. Attachment must be through the insulating concrete into the steel or concrete deck. Insulation board is required. Vapor barriers may be required when installing insulation over new decks.

4. Wood Plank (1" minimum) shall conform to Factory Mutual's requirements for Class 1 impregnated decks (insulation is required). FM approved wood decks are a minimum, nominal 2-inch thick, tongue and groove planks.

5. Plywood (15/32" minimum) shall be exterior grade (minimum CDX grade). A layer of an approved insulation is required for reroof applications. On new construction, while insulation board is recommended, adhering directly to the plywood or Oriented Strand Board (“OSB”) deck is acceptable if the decking is secured with screws or back-out resistant fasteners. Decks attached with common or cement coated nails or staples shall be covered with an approved insulation.

6. Cementitious Wood Fiber Decks - Certain cementitious wood fiber decks may be acceptable to receive a Fully Adhered Mule-Hide TPO Fleece Back or Fleece

Back Plus Membrane Roofing System after pullout tests have been completed and appropriate fasteners have been selected. This deck type requires an acceptable insulation.

7. Gypsum Concrete Deck - shall be cured and dry to manufacturers' and/or industry standards. The surface of the deck shall be smooth and free from ridges and depressions. Certain gypsum concrete decks may be acceptable to receive a Fully Adhered Mule-Hide TPO Fleece Back or Fleece Back Plus Membrane Roofing System after pullout tests have been completed and appropriate fasteners have been selected. This deck type requires an acceptable insulation.

F. For reroofing projects having plywood decks, a minimum of one layer of an approved insulation is required after the tear-off has been completed.

G. Mule-Hide recommends that all roof surfaces have a positive slope to provide adequate drainage. There should not be any ponding water 48 hours after a rainfall.

3.03 Preparation of Existing Substrate

A. General

1. To prevent delays or interruptions, coordinate work with other trades or suppliers to ensure that components to be incorporated into the Fully Adhered Mule-Hide TPO Fleece Back or Fleece Back Plus Membrane Roofing System are available as the work progresses. Examine substrates to which the roofing materials are to be applied to ensure that their condition is satisfactory for the Mule-Hide TPO Membrane Roofing System application.

2. Do not permit voids greater than 1/4" wide in the substrate. Concrete substrates shall be cured and free of laitance and curing compounds. Substrates for roofing materials shall be dry and free of oil, dirt, grease, sharp edges and debris. Inspect substrates and correct defects before application of roofing membrane.

3. Specifier or roofing contractor shall determine the condition of the existing roof deck and roofing system. Areas with deteriorated decking or wet insulation or other failed materials shall have those affected materials removed and replaced. Make sure all decking is securely fastened. The roofing contractor has the final responsibility to ensure an acceptable deck is provided to receive the new roof system.

4. Large blisters shall be cut and patched to provide a reasonably level substrate surface.

5. On recover projects, tear off all existing base flashings, cant strips and projection flashings down to the substrate. The flashing substrate shall be dry and free of oil, dirt, grease, sharp edges and debris.

6. Gravel over existing nailers must be totally removed prior to installing new nailers and flashings. Verify that the existing nailers are in good condition and securely anchored to the roof decks.

7. When an additional thickness of insulation is being added, new nailers must be added to match the height of the new insulation. Nailers must be securely anchored to the roof deck per Section 3.05 of this specification.

8. All roof surfaces shall be free of ponded water, ice, or snow. Significant ponding that remains after a period of 48 hours should be eliminated by either installing tapered insulation to create positive drainage of the roof surface or by installing

new drains in the low areas where the ponding remains. Positive drainage shall also eliminate the possibility of excessive live loads caused by ponding water that could cause structural damage or failure.

9. When removing an existing roof during reroofing, remove only that amount of roofing and flashing that can be made watertight with new Mule-Hide TPO materials in a one-day period or prior to the onset of inclement weather.

10. Gravel surfaced BUR systems require the installation of an acceptable insulation. Loose gravel must be removed. All lead pipe and drain flashings shall be removed.

11. Smooth Surfaced BUR and smooth Modified Bitumen roofing systems shall require the installation of an acceptable insulation. All lead pipe and drain flashings shall be removed. Single-ply membranes such as EPDM, Hypalon, PVC or CPA must have all existing flashings removed, the field sheet must be cut up into sections no larger than 10' by 10' and an acceptable layer of insulation shall be installed over the existing field membrane.

12. Polyurethane Foam roofing systems ("PUF") are not acceptable for recover applications. The PUF system must be completely removed and new insulation installed prior to the installation of the new TPO Roofing System.

13. If a Mule-Hide Premium warranty is requested, the existing roof system **must be removed to the deck** prior to the installation of the new roofing system or a moisture survey by an independent third party must be taken, all wet areas removed and a copy of the survey submitted to Mule-Hide with the warranty application.

3.04 Vapor Retarder Installation (where specified)

A. Specific climatic and job conditions may require the use of a vapor retarder. It is the sole responsibility of the design professional to determine the need for a vapor retarder, and its type and location in the roofing system. A vapor retarder may often act as an "air barrier" which may have a positive effect in reducing internal air pressure. Vapor retarders should be strongly considered for buildings subject to high internal air pressures such as airplane hangars and buildings with many loading bays such as warehouse facilities.

B. The National Roofing Contractor's Association recommends the installation of vapor retarders when interior relative humidity is 45% or greater and the outside mean average January temperature is below 40° F.

C. Install a vapor retarder over a suitable substrate with all side and end laps and all penetrations sealed in accordance with the manufacturer's instructions. The vapor retarder may be loosely laid or adhered with the manufacturer's recommended adhesive. In reroofing where the existing built-up roof is to remain, the built-up roof may be an adequate vapor retarder as long as all splits or tears are repaired in order to provide a total barrier to vapor penetration.

3.05 Wood Nailers

A. Wood nailers are required at all roof perimeter edges where metal edging and gutter systems are specified or where indicated in Mule-Hide’s published Standard TPO Details.

B. Nailers shall be firmly anchored to the decks at a maximum 2'-0" o.c. and shall resist a pullout force of 200 lbs./linear foot in any direction. A 1/2" vent space shall be provided between adjacent lengths of nailers. Fasteners shall be installed within 6 inches of each

end. Spacing and fastener embedment shall conform to Factory Mutual Loss Prevention Data Sheet 1-49.

C. Height of nailers shall match the surface level of the insulation and roof membrane. The width of the wood nailer shall extend beyond the metal flange to prevent damage to the membrane.

D. All woodwork to be reused shall resist a minimum force of 200 lbs/linear foot in any direction and shall be free of rot.

E. Wood nailers with creosote and asphaltic preservatives are not acceptable. Pressure treated lumber is not required on new construction unless specified by the architect.

3.06 Insulation Installation

A. Mule-Hide accepted roof insulations shall be installed in accordance with Mule-Hide specifications.

B. Mule-Hide accepted roof insulations shall be secured to the roof deck in accordance with Mule-Hide's requirements utilizing Mule-Hide fasteners or approved compatible fasteners. An approved low-rise foam adhesive for each layer may be substituted for mechanically fastening through the top layer.

C. All roof insulation shall be neatly cut to fit around all penetrations and projections with a maximum allowable gap of 1/4-inch.

D. Open joints shall be repaired with like insulation material.

E. Insulation shall be feathered or tapered to provide a minimum sump area of 36" x 36" where possible at all drains. Crickets and saddles may be installed beneath the specified insulation where possible. Crickets and saddles made from non-compatible insulations materials must be overlaid with an acceptable insulation or underlayment.

F. Install no more roof insulation in one day than can be covered with the Mule-Hide TPO Membrane or when the onset of inclement weather is anticipated.

G. Insulation installed over steel decks shall be checked so that no edges are left unsupported along the flutes. All insulations shall be of sufficient thickness and density to prevent breakage under normal roof construction traffic.

H. When installing insulation, the end joints of each row of insulation shall be offset against the previous row. When more than one layer of insulation is to be used, succeeding layers are to be laid staggered in relation to the previous layer of insulation and all joints shall be offset.

I. When a Mule-Hide Premium Warranty is requested, only Mule-Hide labeled insulation may be used unless written approval is obtained, prior to job bid, for an alternative insulation.

J. Insulation other than Mule-Hide labeled insulation must be an FM approved insulation and acceptable to Mule-Hide for use under the Mule-Hide Fully Adhered TPO Fleece Back or Fleece Back Plus Roofing System. Refer to the insulation manufacturers guidelines for the appropriate type, size and thickness of the insulation needed for use over the respective substrate and under the Mule-Hide TPO Fleece Back or Fleece Back Plus Roofing System.

K. Mule-Hide's minimum attachment rates shall be as follows:

Insulation Type or Overlay	Fasteners per 4' x 8' board		
	Field	Perimeter	Corner
Approved Polyisocyanurate - Min 2" thick (top layer)	8	12	16
Approved Polyisocyanurate - Min 1.5" up to 2" thick	12	18	24
HD Fiberboard - Min 1/2" thick- Installed over Approved Insulation	16	24	32
Dens Deck Prime - Min 1/4" thick - Installed over Approved Insulation	12	18	24
OSB - Min 7/16" thick - Installed over Approved Insulation	17	25	32
Approved OSB/Polyisocyanurate Composite - Min 2" thick	17	25	32

Contact Mule-Hide's Technical Department for FM approvals and required attachment rates that are determined by deck type, insulation brand, type and thickness. When using multiple layers of insulation or more than one type of insulation, the number of fasteners required per board is determined by the top layer of insulation.

L. Perimeter enhancements

To meet increased uplift requirements in the perimeters and corners of each roof area, additional insulation attachment provisions must be installed as follows:

Perimeters – insulation attachment to be increased 50% over the field attachment requirements with a maximum of one (1) fastener every one (1) square feet.

Corners – insulation attachment to be increased 100% over the field attachment requirements with a maximum of one (1) fastener every one (1) square feet.

1. For Factory Mutual projects, the width of the roof perimeter and corner areas is defined as the smaller of 0.1 times the building lesser plan dimension or 0.4 times the eave height (mean roof height for slopes greater than 2"/12" slope), except for heights greater than 60 ft. The minimum width of the perimeter and corner areas shall not be less than three (3) feet. Contact Mule-Hide Technical Department for Factory Mutual projects exceeding 60 ft. heights.

2. For non Factory Mutual projects, the minimum width of the perimeter and corner areas shall not be less than eight (8) feet.

See Details MHT-UN-108A and MHT-UN-108B

3.07 Membrane Installation

A. General - Unroll the Mule-Hide TPO Membrane and position without stretching. Allow the membrane to relax at least 15 minutes when the temperature is above 60°F, or 30 minutes when the temperature is below 60°F, prior to installation. Inspect and remove any damaged membrane.

B. Membrane should run perpendicular to the direction of steel deck flutes and orientation of wood decks where possible.

C. All membrane overlaps shall be installed to facilitate the flow of water. Seams shall be shingled or run parallel to the flow of water. Backwater seams are not permitted.

D. Mule-Hide TPO Fleece Back and TPO Fleece Back Plus membranes have a 3” fleece free selvage edge along one edge of the membrane. Lap sheets a minimum of 3 inches of fleece free seam to provide space for a continuous, minimum 2” weld. Membrane overlaps shall be shingled with the flow of water or parallel to the flow of water. All welded field seams shall be a minimum of 2 inches wide. End laps shall be butted and stripped in with TPO-c reinforced membrane, see Detail MHT-FA-104E.

E. The roofing contractor shall check all welded seams for continuity and integrity using a cotter pin puller or other suitable blunt object. The contractor shall make sample test seams each day prior to welding field seams. The contractor shall, using scrap material, run at least two test seams, each a minimum of 2' long. Each test seam shall be used to determine adequate seam strength and to ensure the equipment has warmed up, is operating properly and proper settings have been determined. This should be done each time the equipment is turned on after a cool down period.

F. Perimeter - When installing the Mule-Hide Fully Adhered TPO Fleece Back or Fleece Back Plus Roofing membrane system, it is not necessary to install Half Sheets parallel with the perimeter. Full size sheets should be used everywhere practical to minimize the number of field seams. In place of Half Sheets, additional fasteners are installed in the insulation in the perimeter areas as defined in 3.06.L Perimeter Enhancements. Weld all laps (seams and end laps) continuously with a minimum weld width of 2 inches. All field welds shall be completed with an automatic welder. Perimeter areas shall be determined by one of the following methods:

1. Mule-Hide Technical Bulletin TPO-FA01-2006, Standard Fastening Patterns and Guidelines. Mule-Hide defines the minimum perimeter area as 8’ in from the roof edge along all exterior roof edges.

2. For Factory Mutual insured buildings, follow guidelines in FM's Loss Prevention Data Sheet 1-29. Contact Mule-Hide Warranty Department for fastener spacing for compliance with FM 1-60 and 1-90 requirements.

3.08 Field Sheet Attachment

A. General

1. Position membrane over substrate with 3” selvage edge overlap at lap seams, and positioned so that laps will shed water. Allow the membrane to relax at least 15 minutes prior to fastening when temperatures are 60º F and above or 30 minutes when temperatures are below 60° F. After membrane has relaxed, fold membrane in half lengthwise exposing the underside of the sheet. Pails of adhesive are often used to weight the back edge of the membrane to hold it in position. **CAUTION**: Keep the protective packaging of the Mule-Hide Heat-Weld Membrane intact until ready to use.

B. Mule-Hide WBBA-2000 Bonding Adhesive (TPO Fleece Back membrane only)

1. Once several sheets are rolled out, carefully positioned each sheet with a 3" side lap and with the end laps butt jointed, and allow the membrane to relax.

2. After the sheets have relaxed, take the end of the first sheet and pull back to expose the underside of the sheet. Pull the sheet back one half of its length onto itself.

3. Mix adhesive scraping the sides and bottom of the can (minimum of 5 minutes is required) until adhesive is uniform in color. Consult Product Data Sheet for adhesive instructions.

4. Apply a smooth even coating of Mule-Hide WBBA-2000 water based bonding adhesive to the substrate only and immediately roll the fleece back membrane into the **wet** adhesive.

5. Apply the Mule-Hide WBBA-2000 adhesive to the substrate in a uniform manner at the rate of 100 to 120 square feet per gallon. Avoid globs, puddles and un-coated areas. Additional adhesive may be required on porous substrates.

6. Once the membrane has been mated to the insulation, broom the membrane with a stiff bristled push broom to ensure proper contact and 100% adhesion.

7. The Mule-Hide WBBA-2000 adhesive can be applied with a ¼" or $^{3}/_{8}$" nap roller. Note: Adhesive must be wet at time of membrane placement.

8. Repeat this procedure for the second half of the sheet and each successive sheet of membrane on the roof, remembering to shingle all laps. Do not run any seams through field drains or sumps. Any seams running through drains or sumps shall be cut out and target patches (36" x 36") shall be installed.

9. Do not apply adhesive in seam lap areas that are to be heat welded.

C. Membrane attachment with hot asphalt (TPO Fleece Back Plus membrane only)

1. Once several sheets have been rolled out, positioned with proper overlaps, and allowed to relax, carefully fold each sheet in half, lengthwise. A solid coating of hot asphalt at equiviscous temperature (EVT) is to be applied to the substrate at the rate of 20 to 25 lbs. per square, being careful to avoid getting asphalt into the seam areas.

2. Care should be taken to ensure that the hot asphalt is not applied to any membrane areas where seaming will take place. All welding must be done to clean membrane.

3. Carefully fold the membrane into the hot asphalt being careful not to wrinkle the sheet or trap pockets of air. Once the membrane has been mated to the insulation/substrate, thoroughly broom the membrane with a stiff bristled broom to ensure proper contact and 100% adhesion.

4. Repeat this procedure for the second half of the sheet and each successive sheet of membrane on the roof, remembering to shingle all laps. Do not run any seams through field drains or sumps. Any seams running through drains shall be cut out and target patches (36" x 36") shall be installed.

3.09 Welding of Lap Areas

A. General

1. The Mule-Hide TPO Roofing membrane is to be hot air welded only. Seaming "membrane to membrane" and "flashing/detail membrane to membrane" shall only be done by hot air welding.

2. All surfaces to be welded shall be clean and dry.

3. Side laps have a selvage edge that allows them to be heat welded together. End laps must be butted together and covered with a minimum 6" wide strip of reinforced membrane that is heat welded along all edges, refer to Mule-Hide Detail # MHT-UN-104E. Apply cut edge sealant to all cut edges of reinforced

membrane.

B. Hot Air Welding

1. Machines for hot air welding are available from several different sources. Each manufacturer's instructions for use shall be followed, as well as all local codes regarding electric grounding, supply and other related functions. Since most automatic welding machines require 218 to 230 volts, the use of a portable generator on the roof is recommended for greater flexibility. **Mule-Hide requires the use of automatic welding machines for all field sheet seaming. Hand welding is only acceptable for flashings and those seams where the automatic welder cannot be used.**

2. Hand-held welding equipment is also available to weld membrane. After the preheated nozzle tip is applied in the overlap area and the material starts to soften, immediately follow with a silicone hand roller to press the heated membrane surfaces together with slow, even movements. Keep the roller within 1 inch of the nozzle tip. Angle the hot air tool so that the flowing air faces the roller. Seam strength may be tested when cool. For best results, testing seams 8 hours after hot air welding is recommended.

C. “T” Joint Covers

1. **For 45-mil membrane and maximum warranty length of 15-years.** Pay special attention to the “T” lap seams formed where three layers of membrane overlap at a seam. To ensure proper seaming of the “T” joints, the top layer of the Heat-Weld Membrane is creased a minimum of one inch into the lower layer of membrane by using a heat gun with a narrow or pencil tip nozzle and a rubber hand roller. By inserting a heat gun nozzle between the layers of the membrane, the membrane will soften and begin to flow allowing it to crease and seal completely after applying pressure with a hand roller to ensure adequate bonding of the softened material. After heat-sealing the “T” joint, Edge Sealant must be applied on all cut edges of reinforced membrane. See detail MHT-UN-105A.

2. **For membrane thickness greater than 45-mil or warranty length greater than 15-years.** Separate “T” joint patches are required over all “T” joints. See detail MHT-UN-105B

D. Seam Patches at Roof/Wall Transitions

1. Mule-Hide requires the installation of Non-Reinforced TPO Flashing Membrane patches over any seam that transitions from the horizontal to the vertical. These patches are to be constructed with Non-Reinforced TPO Flashing Membrane only and hot air welded. Refer to Mule-Hide Detail MHT-UN-105C

E. Daily Welding Equipment Setup

1. The roofing contractor shall make sample test seams each day prior to welding field seams. The contractor shall, using scrap material, run at least two test seams, each a minimum of 2 feet long. Each test seam shall be used to determine adequate seam strength and to ensure the equipment has warmed up, is operating properly and proper settings have been determined. This should be done each time the equipment is turned on after a cool down period.

F. Quality Control of Seams

1. After seaming, the seams are checked for integrity with a probe. Any openings or "fishmouths" are to be repaired with a hand-held hot air tool fitted with a

narrow nozzle tip and with a roller. Each day the contractor shall attempt to pull apart several sections of welded seams to test the quality of the welds. Should the welds be deficient, a more thorough examination of the work performed must be carried out and necessary repairs made.

3.10 Additional Membrane Securement (Base Attachment)

A. Additional securement of the TPO membrane by mechanical attachment must be provided at the perimeter of each roof level, base of walls, curbs, skylights, expansion joints, tie-ins, interior walls, bottom of valleys and any angle changes that exceed inclines of 2:12 (2” rise in 12”) and various penetrations as shown in the Mule-Hide Standard Details. All securement must be either horizontally to the roof deck or vertically to the base of the various penetrations as shown in the Mule-Hide Standard Details.

B. The mechanical attachment of the membrane may be achieved by the following methods:

1. 2.4” Seam Plate and appropriate fasteners

   a. The 2.4” Seam Plate and appropriate fasteners are placed with the edge of the Seam Plate approximately ½” away from the angle change. Seam Plates may be placed either horizontally or vertically depending on the conditions encountered. Refer to the Mule-Hide TPO Standard Details for proper placement.

2. Mule-Hide All Purpose Bar

   a. The Mule-Hide All Purpose Bar is a specially extruded aluminum bar that has pre-punched holes 6 inches on center. Bar may be placed either horizontally or vertically depending on the detail followed. Refer to the Mule-Hide TPO Standard Details for the proper placement. Refer to Mule-Hide Detail # MHT-UN-330 appropriate placement of the All Purpose Bar.

   b. The maximum spacing of the fasteners shall not exceed 12 inches on center. Adjoining bars should be spaced approximately ½ inch to 1 inch apart. All bars must be attached at the ends a maximum of 1 inch from the end of each bar. This may require pre-drilling additional holes. All cut bars shall be deburred.

   c. Under no circumstances shall the All Purpose Bar be stripped-in with TPO PS Cover Strip. TPO .045 Reinforced 6” X 100’ product may be used to strip-in the All Purpose Bar with a continuous, minimum of 1-1/2” (40 mm) wide weld.

   d. The All Purpose Bar must be installed a minimum of 3 inches to a maximum of 6 inches from inside and outside corners.

3. TPO PS RUSS attachment strip is not approved for use in a TPO Fleece Back or Fleece Back Plus roofing system.

4. Drip Apron and Gravel Stop

   a. For drip aprons and gravel stops, the metal flange shall extend a minimum of 3 inches onto the wood nailer. The wood nailer must be wider than the metal flange. Approved screw fasteners shall be installed a maximum of 6 inches on center and ½" to 3/4" from the inside edge of the metal flange. Ring shank nails spaced a maximum of 4" on center may also be used.

b. Drip aprons and gravel stops not made out of TPO Coated Metal shall be primed with Mule-Hide's TPO Primer or Low Voc Primer and stripped with Mule-Hide's TPO PS Cover Strip. Cleaning the metal with a solvent such as toluene or xylene to remove oil film may be required prior to installing and priming with the TPO Primer. Refer to Mule-Hide detail # MHT-UN-106B.

3.11 Flashing Installation

A. TPO Membrane Flashings

1. **All vertical flashings in a Fully Adhered TPO Fleece Back or Fleece Back Plus Membrane Roofing System must be standard TPO-c membrane.** The flashing membrane thickness must match the thickness of the TPO membrane thickness of the Fleece Back or Fleece Back Plus membrane.

2. All surfaces to be fully adhered should be compatible, dry and smooth with no excessive surface roughness.

3. On recover projects, all existing base flashings must be removed down to the substrate or covered with a new suitable material. If deteriorated areas of substrate are uncovered, repairs must be made to provide a suitable substrate for the new TPO flashings.

B. **TPO Bonding Adhesive, Low VOC Bonding Adhesive, and Low VOC Bonding Adhesive - 1168 (solvent base)**

1. Mix adhesive scraping the sides and bottom of the can (minimum 5 minutes is required) until adhesive is uniform in color. Consult product data sheet for adhesive instructions.

   a. Low VOC Bonding Adhesive and Low VOC Bonding Adhesive – 1168 require mechanical stirring (electric drill), both initially and periodically during application.
   b. Porous surfaces and substrates may require the application of a prime coat and second coat of Low VOC Bonding Adhesive and Low VOC Bonding Adhesive – 1168 to accomplish proper adhesion.

2. Using a plastic core, medium nap roller, apply a smooth even coat of TPO Bonding Adhesive to back side of membrane and substrate (no globs or puddles). A nine inch roller will easily fit into a 5-gallon adhesive container. **Do not apply adhesive in area of seam laps.**

3. Coverage rate to be approximately:
   120 square feet per gallon for one surface (membrane or substrate only)
   or
   60 square feet per gallon per finished surface (membrane and substrate)

4. Allow adhesive to dry to a 'tacky' state. Test adhesive by placing a knuckle into it and turning your wrist a one-quarter turn. Adhesive is ready to mate when it is tacky but does not string when knuckle is lifted.

5. Care must be taken to ensure proper drying. Avoid thin layers of adhesive which can result in over drying and improper adhesion.

6. Roll coated membrane onto substrate being careful to not wrinkle the sheet or trap air bubbles. Once membrane is mated to the substrate, carefully roll the

membrane with a 2-inch wide rubber hand roller to promote maximum positive contact between the membrane and the substrate.

7. TPO Membrane Flashings shall extend a minimum of 6 inches onto the field sheet and be adhered securely. There shall be a minimum of 2 inches between the front of the fastener plates and the edge of the sheet to allow for heat welding. All side laps are to overlap a minimum of 2 inches.

8. **Areas of the flashings and membrane to be welded are not to have TPO Bonding Adhesive applied to them.**

9. Extended drying times can be expected during cool, overcast, humid, shaded, or late day applications. The adhesive must be dry (but still tacky) before mating surfaces to avoid permanent blisters due to trapped solvents.

10. All flashings shall be extended a minimum of 8 inches above roof membrane level and be terminated unless previously accepted by the owner or his representative and the Mule-Hide Technical Department. All flashings shall be hot air welded at their connections with the roofing membrane. Apply Cut Edge Sealant at all welded edges of cut membrane flashings. Refer to Mule-Hide TPO Standard Details for more information.

    NOTE: After flashing is adhered in place, promote full contact adhesion by going back over entire area with a 2-inch rubber hand roller.

C. **WBBA 2000** (Water Base Bonding Adhesive)

1. Mix adhesive scraping the sides and bottom of the can (minimum 5 minutes is required) until adhesive is uniform in color. Consult product data sheet for adhesive instructions.

2. Using a 9” wide, ¼” or 3/8” nap roller, apply a smooth even coat of WBBA-2000 adhesive to back side of membrane and substrate (no globs or puddles). A nine inch roller will easily fit into a 5-gallon adhesive container. **Do not apply adhesive in area of seam laps.**

3. Coverage rate to be approximately:
   120 square feet per gallon for one surface (membrane or substrate only)
   or
   60 square feet per gallon per finished surface (membrane and substrate)

4. Allow adhesive to dry until it turns translucent and does not transfer to a dry finger or pull away from the substrate. WBBA-2000 adhesive will take a longer time to dry. Adhesive must remain tacky.

5. Mate surfaces together avoiding wrinkles. Immediately roll the bonded area of the sheet with a 2-inch wide rubber hand roller to promote maximum positive contact between the membrane and the substrate. Overlap all adjacent flashing sheets a minimum of 2 inches.

6. **Do not apply adhesive in area to be heat-welded.**

7. Extended drying times can be expected during cool, overcast, humid, shaded, or late day applications. The adhesive must be dry (but still tacky) before mating surfaces to avoid permanent blisters due to trapped moisture.

8. Overlap all adjacent flashing sheets a minimum of 2 inches. TPO Membrane Flashings shall extend a minimum of 6 inches onto the field sheet and be

adhered securely. There shall be a minimum of 2 inches between the front of the fastener plates and the edge of the sheet to allow for heat welding. All side laps are to overlap a minimum of 2 inches.

9. All flashings shall be extended a minimum of 8 inches above roof membrane level unless previously accepted by the owner or his representative and the Mule-Hide Technical Department. All flashings shall be hot air welded at their connections with the roofing membrane. All welds must be a minimum of 2” wide. Apply Cut Edge Sealant at all welded edges of cut membrane flashings. Refer to Mule-Hide TPO Standard Details for more information.

   NOTE: After flashing is adhered in place, promote full contact adhesion by going back over entire area with a 2-inch rubber hand roller.

10. All flashings shall be hot air welded at their connections with the roofing membrane. All hand welds shall be a minimum of 1-1/2" wide.

11. All flashings shall be properly terminated according to Mule-Hide's published Standard Details.

NOTE: When using Mule-Hide All-Purpose Bar under Counterflashing to terminate wall flashing or when coping is used, TPO Bonding Adhesive, Low VOC Bonding Adhesive, Low VOC Bonding Adhesive – 1168, or WBBA 2000 Bonding Adhesive may be eliminated when flashing height is 12” - 18” or less, depending on the type of termination. Refer to Mule-Hide’s published Standard TPO Details for additional information.

3.12 Drains, Expansion Joints, Pitch Pans

A. Roof Drains

1. Prepare the surface around each drain to prevent any distortion, tenting, or bridging of the membrane. A smooth transition shall be provided from the roof surface to the surface of the drain bowl/clamping ring.

2. All existing roofing materials and metal flashings shall be removed.

3. Mule-Hide requires the application of one full tube of Water Cut-Off Mastic per drain applied to the drain bowl, under the membrane, where the clamping ring will be seated. This will provide a continuous seal between the membrane and the drain bowl.

4. Do not run field seams through drains or sumps. If sheet layout causes a seam to fall in line with a drain, a target patch (minimum 36” x 36”) shall be required.

5. If TPO Fleece Back or Fleece Back Plus membrane is extended into roof drain, fleece backing must be removed from portion of membrane that extends into the roof drain. See approved detail drawings.

B. Expansion Joints

1. Refer to Mule-Hide’s published Standard TPO Details for application methods for flashing expansion joints.

C. Pitch Pans

1. Install and flash pitch pans as indicated in Mule-Hide’s published Standard TPO Details. All pitch pans shall be filled with Thermoplastic Pourable Sealant.

3.13 Walkway Installation

Walkways should be provided in areas where routine rooftop maintenance occurs and in areas where regular rooftop traffic is expected.

A. TPO Walkway Roll Installation

1. Install TPO Walkway Rolls over clean, dry surfaces.

2. Layout areas where TPO Walkway Rolls are to be installed with most of the material being oriented so that it is placed between field seams with each adjacent and abutting section gapped a minimum of 6". Do not install walkway pads over seams.

3. Heat weld the perimeter of the properly positioned TPO Walkway Roll. Check seams for any voids or inconsistencies that might prevent watertightness.

B. Precast Pavers

1. Install precast paver systems acceptable to Mule-Hide over one layer of 6 oz. HP Protection Mat. Contact Mule-Hide for other acceptable slipsheets.

3.14 Temporary Tie-ins

A. Install temporary cutoffs around incomplete edges of roofing assembly at the end of each day's work and when work must be postponed due to inclement weather. Straighten the insulation line using pieces of insulation loosely laid, and seal the Mule-Hide TPO membrane to the deck or existing membrane. Use a heavy application of roof cement at least six inches in width overlaid with an embedded reinforcement on gravel surfaced roofs. Use polyurethane sealant, low rise foam adhesive, or pourable sealer to seal onto single plies, smooth BUR, or modified bitumen roofs. Remove the temporary seals completely when work resumes, cutting out the contaminated membrane. Remove all sealant, contaminated membrane, insulation fillers, etc. from the work area and properly dispose off-site.

End of Section

This specification represents the applicable information available at the time of its publication. Mule-Hide reserves the right to change this information at any time. Contact Mule-Hide or check the Mule-Hide website (www.mulehide.com) for the latest updates regarding changes or modifications to this specification.

MULE-HIDE PRODUCTS CO., INC.
FULLY ADHERED TPO SELF ADHERING SYSTEM SPECIFICATION

07 54 00/MUL

TABLE OF CONTENTS

PLEASE CONSULT THE MULE-HIDE WEBSITE FOR THE MOST CURRENT INFORMATION AT WWW.MULEHIDE.COM

MULE-HIDE PRODUCTS CO., INC.
FULLY ADHERED TPO SELF ADHERING SYSTEM SPECIFICATION

Revised Oct 2013
07 54 00/MUL

PART 1 - GENERAL

1.01 Description

A. Scope:

1. Furnish and install a Fully Adhered TPO Self Adhering Roofing Membrane with flashings and accessories necessary to comprise a roofing system. The Mule-Hide TPO products and accessories shall be installed in strict compliance with current specifications and drawings as published by Mule-Hide Products Co., Inc. (“Mule-Hide”).

2. The Mule-Hide Fully Adhered TPO (Thermoplastic Polyolefin) Self Adhering Membrane Roof System utilizes a 10’ wide 60-mil (.060 inch) thick reinforced TPO sheet laminated to an elastomeric pressure-sensitive adhesive. The TPO membrane is fully adhered to the substrate by removing the release liner on the laminated adhesive and rolling the membrane in place. Adjoining sheets are overlapped a minimum of 3 inches and welded with a robotic welder. The field membrane is secured at all changes in plane greater than 2” per foot. Note: All membrane thicknesses listed in this specification are nominal thicknesses.

B. Related Work:

The work includes, but is not necessarily limited to the installation of:

1. Vapor Retarder (where specified)
2. Wood Blocking (Nailers)
3. Insulation
4. Slip Sheet (where required)
5. Fasteners
6. Roof Membrane
7. Roof Membrane Flashings
8. Metal Flashings
9. Adhesives
10. Sealants
11. Walkways

Note: Mule-Hide recommends adherence to industry standards (SMACNA) for the installation of any metalwork.

1.02 Quality Assurance

A. The Mule-Hide Fully Adhered Reinforced TPO Self Adhering Membrane Roofing System shall be installed by an independent roofing contractor eligible (Warranty Eligible) to apply for Mule-Hide "System Warranties" when Standard System or Premium System Warranties are requested.

B. There shall be no deviations from this specification or the Mule-Hide Products Co., Inc. ("Mule-Hide") standard details without prior written approval from Mule-Hide's Warranty Department.

C. Upon completion of the installation according to the terms and conditions stated in this specification and in accordance to the information given in the Warranty Application and Pre-Job survey form and any additional approvals which might have been given by Mule-

Hide, an authorized representative of Mule-Hide shall perform an on-site inspection of the roof to verify that all installation and material requirements have been met.

Note: Inspections are only conducted on projects where a "System Warranty" is requested. Inspections are not conducted on projects not requiring a Mule-Hide Warranty or when only a "Roofing Membrane Limited Warranty" is requested. The sole purpose of an inspection by a Mule-Hide Representative is not to be a final inspection for the benefit of the Building Owner/Owner's Representative. It is for the benefit of Mule-Hide to determine if a warranty may be offered for the project.

D. Mule-Hide reserves the right to reject any roof system and refuse to issue any warranty on roofs which do not comply with Mule-Hide's specifications or current policies.

1.03 Submittals

A. Prior to the time of bidding, the roofing contractor shall submit to the Owner or Owner's representative the following items:

1. Copies of Mule-Hide specifications and published product data.
2. Samples of each material to be used in the roof system.
3. Specimen copy of Mule-Hide Products Co. warranty
4. Dimensioned shop drawings to include an outline of the roof and appropriate details for flashings and terminations.
5. Certification from insulation, roofing and accessory components manufacturers that all materials supplied comply with identified ASTM and industry standards.
6. Verification that system specifications meet all identified code and insurance requirements including but not limited to the following:

   a. Factory Mutual Research Laboratories
   Norwood, MA

   b. Underwriters Laboratories
   Northbrook, IL

   Note: It is the Building Owner/Owner's Representative's responsibility to determine what submittals are required for the project.

B. Submit to Mule-Hide, prior to the job start, a Heat-Weld System Warranty Application to be reviewed by the Mule-Hide Warranty Department to determine the acceptability of the project based on the information provided.

1. The Heat-Weld System Warranty Application ("Warranty Application") must be completely filled out and should be accompanied with a copy of the written roof specification (if available). Also included should be any requests for deviations to Mule-Hide's standard published specification and details.

2. A roof drawing shall be submitted with the Warranty Application indicating all dimensions and locations of all penetrations.

1.04 Product Delivery, Storage and Handling

A. All products delivered to the job site shall be in their original unopened containers or wrappings and clearly labeled with the manufacturer's name, product identification and date of manufacture.

B. Protect all materials from damage during transit, storage and delivery to the job site.

Place all materials on pallets and protect from moisture.

C. Store all materials in a dry, clean area protected from the elements. All rolls of membrane shall be stored flat on pallets.

D. All adhesive, caulking, and Self Adhering TPO membrane shall be stored at temperatures between 60°F and 80°F. Materials exposed to lower temperatures affect the workability and performance of the product. Products shall be restored to the above temperature prior to use.

E. All flammable materials shall be stored in a cool, dry area away from open flames and sparks. Follow precautions outlined on containers or supplied by the material manufacturer/supplier.

F. All materials determined as being damaged (confirmed by Mule-Hide) due to improper storage on the job site are to be replaced with new materials.

1.05 Job Conditions

A. This specification shall not be considered applicable without the appropriate additional specifications approved by Mule-Hide if it should be determined that any of the following conditions exist:

1. The installation of any Mule-Hide Roof System is in a coastal area or high wind zone.

2. If the Mule-Hide Roof System should exceed the structural load conditions as determined by an architect or Engineer.

3. When chemical or hazardous materials are discharged onto the Mule-Hide Roof System.

B. Mule-Hide TPO Self Adhering Membrane Roofing System cannot be installed in temperatures below 50° F

C. The General Contractor or the building owner shall be responsible for providing adequate surfaces and structures to receive the insulation, Mule-Hide Roof System and related sheet metal necessary for the successful completion of the project.

D. Only as much new roofing as can be made watertight each day shall be installed each day. This includes all flashing work.

E. All substrates to receive new insulation, membrane or flashing shall be thoroughly dry. Should surface moisture occur, the contractor shall provide adequate equipment to dry the substrate prior to application of new materials.

F. Prior to and during application, all dirt, debris and dust shall be removed from surfaces to be roofed for both new and reroofing substrates.

G. On all projects where the Fully Adhered TPO Self Adhering system is specified, it is the responsibility of the independent roofing contractor to have the owner or owner's representative verify the condition of the deck or substrate and to confirm the roof deck can withstand the additional load.

H. Precautions shall be taken to prevent wind blow-off or wind damage during the course of the roofing application. This may necessitate additional securement of temporary construction, materials and equipment.

I. The contractor shall verify and ensure that all roof drain lines are unblocked before starting work. Any blockages found shall be reported to the owner's representative and Mule-Hide's Warranty Department in writing.

J. Temporary waterstops shall be installed at the end of each day's work. Temporary waterstops shall be removed at the start of the next day's work and disposed of properly. Waterstops shall be compatible with all materials.

K. Do not install the Mule-Hide TPO Roofing Membrane in direct contact with any product containing coal tar pitch, creosote or penta-based materials. Consult the Mule-Hide Technical Service Department for special installation requirements.

L. Do not allow contaminants such as petroleum, grease, acid, solvents, vegetable or mineral oil, animal oil, animal fat, etc. or direct steam venting to come into direct contact with the Mule-Hide TPO Roofing Membrane. Contact the Mule-Hide Technical Service Department for recommendations if such conditions exist.

M. The contractor shall follow and comply with all safety regulations as recommended by OSHA.

N. All work shall be scheduled and executed without exposing interior building areas to the effects of inclement weather. The existing building and its contents shall be protected against all risks.

O. Arrange work sequence to avoid use of newly constructed roofing for storage, walking surfaces and equipment movement. Contractor shall provide all necessary protection and barriers to segregate the work areas and prevent damage to adjacent areas. If excessive traffic over newly installed membrane is necessary, contractor shall provide plywood or polyester felt protection to prevent damage. All damaged materials shall be replaced with new materials.

P. All existing roofing materials to be removed for construction shall be immediately removed from the construction site to a dumping area authorized to receive such debris. Any hazardous materials such as asbestos or materials containing asbestos fibers shall be removed and disposed of in accordance with applicable City, State and Federal requirements.

Q. Any unusual or concealed condition discovered during the course of the work is to be reported to the owner and Mule-Hide immediately in writing. Work is to be halted until the owner has responded with a solution to the problems.

R. All local building codes and requirements should be followed where applicable. It is the roofing contractor's sole responsibility to determine and ensure that the roofing system selected complies with all local codes and requirements.

S. Both interior and exterior building areas affected by construction shall be cleaned up and any damaged areas shall be repaired to the owner's satisfaction.

T. Certain project conditions may require modifications to this specification. Contact the Mule-Hide Warranty Department if any of the following conditions exist:

1. Roof heights greater than 60 feet.

2. Geographical location in a 100 mph or greater wind zone, per the ANSI 100 year mean recurrence interval wind isotach.

3. Location with a D exposure as determined in ANSI A58.1

U. When using heat-welding equipment, always review the equipment manufacturer's instructions, precautions and warnings.

V. Consideration should be given in the project design to problems that can precipitate from the smooth surface characteristic of the Mule-Hide TPO membrane.

1.06 Warranties

All Mule-Hide warranties are available for commercial projects. A Roofing Membrane Limited Warranty for a maximum of 10 years is available for residential projects.

A. Mule-Hide's Roofing Membrane Limited Warranty

Mule-Hide offers a 10, 15, or 20-year Roofing Membrane Limited Warranty ("Warranty") for a charge. The Warranty covers only the Mule-Hide TPO membrane (or portion thereof) determined by Mule-Hide to be defective and resulting in roof leaks. This Warranty does not cover workmanship or other components not supplied by Mule-Hide. Mule-Hide does not perform inspections of the installation before issuing the Roofing Membrane Limited Warranty. A Mule-Hide Warranty Application and the appropriate fee must be submitted to Mule-Hide to obtain this warranty. Proof of purchase may be required.

Note: Projects requesting a 20-year Roofing Membrane Limited Warranty require the use of a minimum 60-mil (.060 inch) thick TPO membrane and shall incorporate additional design enhancements as outlined in the 20-year Design Enhancements for TPO Self Adhering Roofing System Specification. Mule-Hide recommends that Warranty Applications be submitted for review prior to bidding the project.

B. Mule-Hide's Standard System Warranty

Mule-Hide offers a 10, 15, or 20-year Standard System Warranty ("Standard") for commercial projects for a charge. The Standard warranty is a "No Dollar Limit", labor and material warranty that covers the Mule-Hide labeled membrane and other components supplied by Mule-Hide installed by a Mule-Hide Warranty Eligible Applicator. The Standard warranty does not cover insulation or its attachment system. Metal flashing components not supplied by Mule-Hide are not covered under this warranty. A Mule-Hide Warranty Eligible Applicator must submit a Warranty Application and the appropriate fee to Mule-Hide. Standard warranties require inspections by a Mule-Hide representative.

Note: Projects requesting a 20-year Standard System Warranty require the use of a minimum 60-mil thick TPO membrane and shall incorporate additional design enhancements as outlined in the 20-year Design Enhancements for TPO Self Adhering Roofing System Specification. Mule-Hide recommends that Warranty Applications be submitted for review prior to bidding the project.

C. Mule-Hide Premium System Warranty

Mule-Hide offers a 10, 15, or 20-year Premium System Warranty ("Premium") for commercial projects for a charge. The Premium warranty is a "No Dollar Limit", labor and material warranty that covers the Mule-Hide labeled membrane, insulation, other components supplied by Mule-Hide and approved products (such as insulation adhesive or other pre-approved accessories) installed by a Mule-Hide Warranty Eligible Applicator. A Mule-Hide Warranty Eligible Applicator must submit a Warranty Application and the appropriate fee to Mule-Hide. Premium warranties require inspections by a Mule-Hide representative.

Note: Projects requesting a 20-year Premium Warranty require the use of a minimum 60-mil thick TPO membrane and shall incorporate additional design enhancements as outlined in the 20-year Design Enhancements for TPO Self Adhering Roofing System Specification. Mule-Hide recommends that Warranty Applications be submitted for review prior to bidding the project.

D. Metal flashing products supplied by Mule-Hide (Mule-Hide Metal Accessories) and installed by a Mule-Hide Warranty Eligible Applicator will be covered under a Standard or Premium System warranty.

E. Standard and Premium System warranties are not available for residential projects.

F. TPO tie-ins to built-up (BUR) or any other type of roof system are not covered by Mule-Hide warranties.

G. Contact Mule-Hide for other extended warranties that may be available.

H. Terms and Conditions of Warranties

Mule-Hide's obligations under the Roofing Membrane Limited Warranty, the Standard System Warranty, and the Premium System Warranty are limited to the specific terms and conditions of the respective Warranties. Sample copies of the Mule-Hide Warranties are available from Mule-Hide upon request.

PART 2 - PRODUCTS

2.01 General

A. The components of the Fully Adhered Mule-Hide TPO Self Adhering Membrane Roof System are to be products manufactured or supplied by Mule-Hide Products Co., Inc.

B. Components other than those supplied or manufactured by Mule-Hide may be submitted for review and acceptance by Mule-Hide's Warranty Department. Mule-Hide's acceptance of any other product is based solely on chemical compatibility and published performance data provided by the component manufacturer. Other components may be considered on a job-by-job basis and must be approved in writing by Mule-Hide's Warranty Department. Mule-Hide offers no warranty or guarantee for the performance or suitability of any component not supplied or manufactured by Mule-Hide.

2.02 Roofing Membrane

The Mule-Hide Reinforced TPO Self Adhering Membrane is available in 10’ wide rolls and 60 mils (.060 inch) thick. The Mule-Hide TPO Self Adhering membrane is a polyester scrim reinforced thermoplastic polyolefin roofing membrane that meets and exceeds the requirements of ASTM D6878 Standard Specification for Thermoplastic Polyolefin Based Sheet Roofing laminated to an elastomeric pressure-sensitive adhesive. Refer to the Product Data Sheets for physical properties and additional information.

2.03 Accessory Materials

The following Mule-Hide materials must be used to install Mule-Hide Roof Systems. Mule-Hide will not warrant any application where another manufacturer's product is substituted for a Mule-Hide product. **All products listed below are physically and chemically compatible with each other.**

A. Mule-Hide TPO Bonding Adhesive - A solvent-based rubberized adhesive used for bonding Mule-Hide TPO-c Membrane to various vertical substrates and insulation boards. Mule-Hide TPO Bonding Adhesive is a two-surface contact adhesive that is applied to both the underside of the membrane and substrate surface. This product may

be used with TPO field membrane and flashing membrane. Adhesive is compatible with polyisocyanurate, wood fiberboard insulations, fiberglass-faced gypsum panels, concrete, masonry, metal and wood surfaces. This adhesive is to be used for flashings only and not to adhere the Self Adhering TPO membrane.

B. Mule-Hide Low VOC Bonding Adhesive - A high strength solvent-based contact adhesive that allows bonding of TPO membrane to various porous and non-porous substrates. It is specially formulated using a blend of VOC exempt and non-exempt solvents to be meet the < 250 g/l VOC content requirements of the OTC Model Rule for Single Ply Roofing Adhesives. This adhesive is to be used for flashings only and not to adhere the Self Adhering TPO membrane.

C. Mule-Hide Low VOC Bonding Adhesive - 1168 – A high strength solvent-based contact adhesive that allows bonding of TPO membrane to various porous and non-porous substrates. It is specially formulated using a blend of VOC exempt and non-exempt solvents to be meet the < 250 g/l VOC content requirements of the OTC Model Rule for Single Ply Roofing Adhesives. **This product COMPLIES with the following California counties' VOC regulations:** Alameda, Contra Costa, El Dorado, Los Angeles, Marin, Napa, Orange, Riverside, Sacramento, San Bernardino, San Diego, San Francisco, San Mateo, Santa Clara, Solano, Sonoma, and Tehama. This adhesive is to be used for flashings only and not to adhere the Self Adhering TPO membrane.

D. Mule-Hide WBBA-2000 – A water base adhesive used to bond Mule-Hide TPO-c membrane to various vertical substrates and insulation boards. WBBA-2000 is applied as a two-sided contact adhesive when used with standard (non-fleece back) TPO membranes, or as a single-side, wet lay-in adhesive when used with Mule-Hide Fleece Back TPO membrane. This adhesive is to be used for flashings only and not to adhere the Self Adhering TPO membrane.

E. Mule-Hide TPO Primer - A high-solids-content, clear (translucent color), polymer-based splice primer used to prepare TPO membrane for improved adhesion to pressure-sensitive TPO accessories such as: RUSS Strips, TPO Pressure Sensitive Cover Strips, Uncured Flashing Tapes and Cured Cover Tapes. Mule-Hide TPO Primer is required to prepare TPO membrane surfaces prior to the application of any pressure sensitive Mule-Hide accessories.

F. Mule-Hide Low VOC Primer - a solvent-based product designed to prepare TPO membrane for improved adhesion to pressure-sensitive TPO accessories such as: RUSS Strips, TPO Pressure Sensitive Cover Strips, Uncured Flashing Tapes and Cured Cover Tapes. This Low-VOC product is ideal for use in states where VOC content is a concern.

G. Mule-Hide TPO Flashing - a non-reinforced, .060-inch thick material primarily used to seal details where field fabrication is necessary, such as drain details, pipe flashings, pitch pocket flashings, seaming joints of the Mule-Hide TPO Coated Metal, and any place where reinforced membrane is not practical.

H. Mule-Hide TPO Universal Corners - .060-inch thick pre-molded, non-reinforced TPO material. They are uniform in shape and size and provide water tightness at corners formed by TPO coated metal and flashing membrane. They provide a neat, finished look to building corners, curbs and parapet flashings with no cutting or stretching required. Universal Corners are available in white only.

I. Mule-Hide TPO Outside Corners – are pre-molded and are used for flashing outside corners on a variety of details. Installation is fast and easy with no cutting or stretching required. TPO Outside Corners are available in white, gray, and tan.

J. Mule-Hide TPO Inside Corners – are pre-molded and are used for flashing inside corners

on a variety of details. Installation is fast and easy with no cutting or stretching required. TPO Inside Corners are available in white, gray, and tan.

K. Mule-Hide Weathered Membrane Cleaner - Used to clean in-service TPO-c membrane prior to the welding process. This cleaner helps to loosen and remove dirt and other contaminants from the surface of the TPO-c membranes and leaves a suitable surface for welding or the subsequent application of TPO Primer.

L. Mule-Hide TPO Pipe Seal - An injection molded, pre-formed flashing for pipes made of Mule-Hide non-reinforced TPO material. They are designed to add ease to the installation process while offering increased watertight security and improved aesthetics. TPO Pipe Seals are designed as an economical flashing for single pipe penetrations on Mule-Hide TPO-c Membrane roof systems. The TPO Pipe Seals can be used wherever the TPO Pipe Seals may be slipped over the top of the pipe.

M. Mule-Hide TPO T-Joint Cover - 60-mil non-reinforced flashing cut into a 4.5” diameter circle used to seal step-offs at splice intersections. Installation is mandatory on all 60-mil and 80-mil TPO systems and on all jobs warranted longer than 15 years.

N. Mule-Hide TPO Coated Metal – 24-gauge, galvanized steel to which is laminated 35 mils (.035" thick) of Mule-Hide non-reinforced TPO Membrane used for flashing and edge metal detailing.

O. Mule-Hide All-Purpose Bar ("A-P Bar") - an extruded aluminum bar, 50 mils (.050") thick, used to terminate adhered reinforced membrane vertical flashings in certain constructions. Mule-Hide A-P Bar may also be used to anchor the field sheet at the base of vertical angle changes.

P. Membrane Fasteners and Discs - Mule-Hide offers a variety of membrane fasteners and discs to meet specific job conditions and substrates.

Q. Mule-Hide Thermoplastic Pourable Sealant - a one-component thermoplastic sealant for use in pitch pockets.

R. Mule-Hide TPO .045 Reinforced 6” X 100’ – used for stripping-in TPO Coated Metal and as cover strips over TPO Coated Metal joints.

S. Mule-Hide TPO Cut Edge Sealant – A solvent-based liquid sealant used to seal the cut edge of the Mule-Hide TPO Membrane.

T. Mule-Hide TPO Walkway Rolls – a 1/8-inch thick embossed TPO membrane available in rolls (34" x 50’) having a herringbone traction surface. Walkway Rolls are trimmed in safety yellow along the length of the sheet to better define the walkway area. Walkway Rolls may be welded directly to the TPO roofing membrane. The yellow edges are smooth without safety lugs to allow for easier welding. Walkway Rolls are available in White and Gray colors.

U. Mule-Hide Insulation - Mule-Hide Poly ISO polyisocyanurate insulation (flat or tapered) is a closed-cell polyisocyanurate foam core laminated to heavy, black (non-asphaltic) glass fiber reinforced felt facers.

V. Mule-Hide HP Protective Mat - A nominal 6.0-ounce per square yard (140 grams per square meter) UV resistant polypropylene needle punched fabric. It can be used above the membrane as a slipsheet for protection from damage by materials placed on top of the membrane.

2.04 Related Materials By Others

A. Wood Nailers

1. Nailers shall be #2 or better lumber. Creosote and asphaltic preservatives are not acceptable. Pressure treated lumber is not required on new construction unless specified by the architect.

2. Wood nailers shall conform to Factory Mutual's Loss Prevention Data Sheet 1-49.

3. Wood nailers shall be installed as specified on the project drawings and shall be of a height sufficient to match the thickness of the insulation being used.

B. Vapor Retarders

1. Vapor retarders shall meet specified codes and insurance requirements.

2. Vapor retarders shall be compatible with insulation and other accessories.

3. The use and placement of a vapor retarder should be determined by an architect or engineer. Mule-Hide does not require the use of vapor retarders. However, Mule-Hide recommends that a vapor retarder be considered when both of two conditions are anticipated:

   a. The outside average January temperature is below 40°F, and

   b. The expected interior winter relative humidity is 45% or greater.

4. Mule-Hide must be contacted for buildings that are refrigerated (freezers or cold storage) or have a high interior humidity such as, but not limited to, swimming pools, produce storage or locker rooms.

C. Insulation

1. Insulation shall be installed as a protection layer over the existing substrate or to obtain a desired thermal value.

2. Insulation shall be compatible with the Mule-Hide TPO Membranes, Mule-Hide Adhesives, Mule-Hide TPO Flashings and other Mule-Hide Accessories.

3. The following insulation boards are acceptable for use with a fully adhered roofing system when a standard warranty is requested:

   a. Polyisocyanurate insulations having non-asphaltic facers (foil facers are not acceptable) meeting the physical property requirements of Fed. Spec HH-I-1972 and having a minimum compressive resistance of 18 psi. Thickness minimum is 1.0" or greater as required by insulation manufacturer to span steel deck flutes.

   b. High Density Polyisocyanurate recover board insulations having non-asphaltic facers (foil facers are not acceptable) meeting physical property requirements of ASTM C 1289 Class II (20 psi). 1/2-inch thick is the minimum requirement and may be used as an overlay over an approved insulation.

   c. Dens Deck Prime or Securock - A minimum 1/4" thick layer of Dens Deck Prime or Securock may be used as an overlay over an approved insulation.

d. Expanded Polystyrene. Density of boards must be 1.0 PCF certified minimum and meeting ASTM C578, Type II physical properties. Minimum thickness shall be 1.0 inch. When installing directly over a steel deck the minimum thickness shall be as required by insulation manufacturer to span flutes. An overlay of a minimum 1/2" thick HD polyisocyanurate recover board insulation, minimum 1" polyisocyanurate insulation, minimum ¼" DensDeck, or minimum ¼" Securock is required. Check local building codes as a layer of gypsum board may be required under the EPS insulation (on steel decks).

e. Extruded polystyrene meeting ASTM C578, Types IV, VI or VII physical properties. Minimum thickness shall be 1.0 inch. When installing directly over a steel deck the minimum thickness shall be as required by insulation manufacturer to span flutes. An overlay of a minimum 1/2" thick HD polyisocyanurate recover insulation, minimum 1" polyisocyanurate insulation, minimum ¼" DensDeck, or minimum ¼" Securock is required. Check local building codes as a layer of gypsum board may be required under the extruded insulation (on steel decks).State and local building codes should be reviewed regarding the installation of expanded or extruded polystyrene insulation directly over a steel deck.

4. Installation direct to high density wood fiber insulation or perlite insulation is not approved within a Fully Adhered TPO Self Adhering Roofing System.

5. Insulation manufacturer shall provide its recommendations for use and attachment to the owner with a copy sent to Mule-Hide's Warranty Department. In addition, the insulation manufacturer shall provide a copy of their specific warranty conditions.

5. Mule-Hide Premium Warranties require the use of the Mule-Hide labeled insulation or insulation by an approved Mule-Hide manufacturer. Use of other insulations may disqualify the project for consideration of the issuance of a Premium warranty. Contact the Mule-Hide Technical Service Department for specific requirements.

D. UL and FM Approved Assemblies

Contact Mule-Hide Technical Department for proper insulated assemblies when projects require compliance with UL or FM requirements. The components may change with the slope, deck type and classification requested.

E. Sheet Metal

1. Metal flashing products supplied by Mule-Hide (Mule-Hide Metal Accessories) and installed by a Mule-Hide Warranty Eligible Applicator will be covered under a Standard or Premium System warranty.

2. TPO Coated Metal and non-coated metal components such as gravel stops, drip aprons, counterflashings, copings, etc., should be fabricated and installed in accordance ES-1 recommendations and requirements.

3. Sheet metal components supplied by others are not covered by the Mule-Hide warranties. Contact Mule-Hide's Technical Department for specific requirements.

F. Insulation Adhesive

1. Insta-Stik™ - A single component polyurethane, construction grade, low-rise expanding foam adhesive used for attaching approved insulations to concrete, cellular lightweight insulating concrete, gypsum or cementitious wood fiber decks.

2. Weather-Tite One Step® – A **two component**, one-step, all-purpose foamable adhesive that will lock insulation boards into place within 5 – 10 minutes of application in all temperatures.

2.05 Precautions

A. Consult Material Safety Data Sheets and container labels for specific safety instructions prior to use.

B. Avoid breathing vapors of solvents, cleaners, primers, sealants and adhesives. Use with adequate ventilation. Avoid prolonged contact of solvents, sealants, cleaners, primers and adhesives with skin. Solvent resistant rubber gloves should always be worn during use.

C. Do not use Mule-Hide TPO roofing products near fire or flame. Do not use open flames for drying of surfaces, sealants or adhesives. **Do not smoke near flammable products.**

D. Do not use oil-based paint on Mule-Hide TPO Coated Metal or membrane. Contact Mule-Hide's Technical Department for recommendations.

E. Do not allow muriatic acid (masonry cleaner) to come in direct contact with the Mule-Hide TPO Membrane or accessory products.

F. Do not allow Mule-Hide TPO membranes or accessories to come into direct contact with steam or vents that produce temperatures in excess of 160°F (71°C).

G. The Mule-Hide TPO Self Adhering Roof System may NOT be installed in temperatures below 50° F

H. Cover Tapes may lose tack when exposed to temperatures below 40° F. for extended periods of time. A heat gun may be used to warm the product. Only apply heat to the TPO side. Be careful not to overheat. Hot boxes are the preferred method to warm tapes.

I. In colder temperatures when the ambient temperature is near the dew point, condensation may form on the tape primer and adhesive as the solvents flash off. If condensation occurs, discontinue the application and allow the surface to dry. **Do not attempt to dry the surface with heat guns or torches.** When weather permits apply a new coat of product.

PART 3 - EXECUTION

3.01 General

A. When installing a Fully Adhered Mule-Hide Reinforced TPO Self Adhering Membrane Roofing System in cooler weather, it is recommended that liquids such as solvents, sealants, etc. be stored at warmer temperatures (60°F or more but not exceeding 80°F) until just prior to use in order to facilitate the installation.

Self Adhering TPO membrane must be installed in temperatures above 50° F.

3.02 Substrate Conditions

The following general conditions apply to the substrate that will receive a Fully Adhered Mule-Hide TPO Self Adhering Membrane Roofing System for both new construction and reroof applications:

A. The roof deck must be structurally sound to provide proper securement for mechanical fasteners. Areas showing a loss of integrity due to corrosion, rotting, warping, concrete spalling, etc., must be repaired or replaced prior to installing the roofing system.

B. It is the responsibility of the roofing contractor to perform test cuts at each roof area prior to reroofing. The condition of the substrate must be suitable to receive a Fully Adhered Mule-Hide TPO Self Adhering Roofing System. Wet insulation must be removed and replaced. See Single Ply Roofing Institute's guidelines for determining wet insulation.

C. Contact the material manufacturer when the substrate is exposed to excessively high humidity and/or a corrosive environment. Special fasteners (i.e.- stainless steel) or details may be required.

D. A determination must be made regarding the presence or absence of coal tar pitch within the existing roof assembly when considering a recover of the old roof system. The presence of coal tar pitch requires the use of a suitable slipsheet under the insulation unless the coal tar pitch is 10 years or older and is separated from the TPO membrane by a layer of insulation a minimum of 1-1/2 inches thick having a minimum "R" value of 5.0. All joints must be butted tightly together or have the joints completely taped to prevent volatiles from damaging the roof membrane.

E. It is acceptable to install a Fully Adhered Mule-Hide TPO Self Adhering Membrane Roofing System over the following deck substrates in new construction, provided that an acceptable insulation is installed over the substrate as needed:

1. Structural Metal Deck (22 gauge minimum) shall conform to recommendations outlined in Factory Mutual's Loss Prevention Data Sheet 1-28 (requires insulation). Contact Mule-Hide's Warranty Department for attachment requirements for decks less than 22-gauge in thickness. All FM testing is based on attachment to a 22-gauge steel deck.

2. Structural concrete and pre-cast, pre-stressed concrete (2,500 psi. minimum) shall be cured and dry to industry standards and surface shall be smooth and free of moisture or frost. All sharp ridges or other projections above the surface shall be removed before roofing. An approved insulation board is recommended. Minimum deck thickness shall be 2 inches with 3 inches preferred due to possible spalling damage that may occur to the underside of the deck when using fasteners for insulation and membrane attachment. Insulation may be attached with Type III or IV hot asphalt, approved adhesive or approved fasteners. The membrane may be adhered directly to structural concrete decks that have been trowel finished and are completely cured (28 day minimum).

3. Lightweight Insulating Concrete Fill and Metal Form work (minimum 24 gauge metal form work) - the roof deck shall be cured and dry to the deck manufacturer's and/or industry standards and shall be smooth and free of ridges and depressions. All necessary venting as recommended by the roof deck manufacturer shall be accomplished. These decks may be acceptable to receive a Fully Adhered Mule-Hide TPO Self Adhering Membrane Roofing System after pullout tests have been completed and appropriate fasteners have been selected. Attachment must be through the insulating concrete into the steel or concrete deck. Insulation board is required. Vapor barriers may be required when installing insulation over new decks.

4. Wood Plank (1" minimum) shall conform to Factory Mutual's requirements for

Class 1 impregnated decks (insulation is required). FM approved wood decks are a minimum, nominal 2-inch thick, tongue and groove planks.

5. Plywood (15/32" minimum) shall be exterior grade (minimum CDX grade). A layer of an approved insulation is required for reroof applications. On new construction, while insulation board is recommended, adhering directly to the plywood or Oriented Strand Board ("OSB") deck is acceptable if the decking is secured with screws or back-out resistant fasteners. Decks attached with common or cement coated nails or staples shall be covered with an approved insulation.

6. Cementitious Wood Fiber Decks - Certain cementitious wood fiber decks may be acceptable to receive a Fully Adhered Mule-Hide TPO Self Adhering Membrane Roofing System after pullout tests have been completed and appropriate fasteners have been selected. This deck type requires an acceptable insulation.

7. Gypsum Concrete Deck - shall be cured and dry to manufacturers' and/or industry standards. The surface of the deck shall be smooth and free from ridges and depressions. Certain gypsum concrete decks may be acceptable to receive a Fully Adhered Mule-Hide TPO Self Adhering Membrane Roofing System after pullout tests have been completed and appropriate fasteners have been selected. This deck type requires an acceptable insulation.

F. For reroofing projects having plywood decks, a minimum of one layer of an approved insulation is required after the tear-off has been completed.

G. Mule-Hide recommends that all roof surfaces have a positive slope to provide adequate drainage. There should not be any ponding water 48 hours after a rainfall.

3.03 Preparation of Existing Substrate

A. General

1. To prevent delays or interruptions, coordinate work with other trades or suppliers to ensure that components to be incorporated into the Fully Adhered Mule-Hide TPO Self Adhering Membrane Roofing System are available as the work progresses. Examine substrates to which the roofing materials are to be applied to ensure that their condition is satisfactory for the Mule-Hide TPO Self Adhering Membrane Roofing System application.

2. Do not permit voids greater than 1/4" wide in the substrate. Concrete substrates shall be cured and free of laitance and curing compounds. Substrates for roofing materials shall be dry and free of oil, dirt, grease, sharp edges and debris. Inspect substrates and correct defects before application of roofing membrane.

3. Specifier or roofing contractor shall determine the condition of the existing roof deck and roofing system. Areas with deteriorated decking or wet insulation or other failed materials shall have those affected materials removed and replaced. Make sure all decking is securely fastened. The roofing contractor has the final responsibility to ensure an acceptable deck is provided to receive the new roof system.

4. Large blisters shall be cut and patched to provide a reasonably level substrate surface.

5. On recover projects, tear off all existing base flashings, cant strips and projection flashings down to the substrate. The flashing substrate shall be dry and free of oil, dirt, grease, sharp edges and debris.

6. Gravel over existing nailers must be totally removed prior to installing new nailers and flashings. Verify that the existing nailers are in good condition and securely anchored to the roof decks.

7. When an additional thickness of insulation is being added, new nailers must be added to match the height of the new insulation. Nailers must be securely anchored to the roof deck per Section 3.05 of this specification.

8. All roof surfaces shall be free of ponded water, ice, or snow. Significant ponding that remains after a period of 48 hours should be eliminated by either installing tapered insulation to create positive drainage of the roof surface or by installing new drains in the low areas where the ponding remains. Positive drainage shall also eliminate the possibility of excessive live loads caused by ponding water that could cause structural damage or failure.

9. When removing an existing roof during reroofing, remove only that amount of roofing and flashing that can be made watertight with new Mule-Hide TPO materials in a one-day period or prior to the onset of inclement weather.

10. Gravel surfaced BUR systems require the installation of an acceptable insulation. Loose gravel must be removed. All lead pipe and drain flashings shall be removed.

11. Smooth Surfaced BUR and smooth Modified Bitumen roofing systems shall require the installation of an acceptable insulation. All lead pipe and drain flashings shall be removed. Single-ply membranes such as EPDM, Hypalon, PVC or CPA must have all existing flashings removed, the field sheet must be cut up into sections no larger than 10' by 10' and an acceptable layer of insulation shall be installed over the existing field membrane.

12. Polyurethane Foam roofing systems ("PUF") are not acceptable for recover applications. The PUF system must be completely removed and new insulation installed prior to the installation of the new TPO Roofing System.

13. If a Mule-Hide Premium warranty is requested, the existing roof system **must be removed to the deck** prior to the installation of the new roofing system or a moisture survey by an independent third party must be taken, all wet areas removed and a copy of the survey submitted to Mule-Hide with the warranty application.

3.04 Vapor Retarder Installation (where specified)

A. Specific climatic and job conditions may require the use of a vapor retarder. It is the sole responsibility of the design professional to determine the need for a vapor retarder, and its type and location in the roofing system. A vapor retarder may often act as an "air barrier" which may have a positive effect in reducing internal air pressure. Vapor retarders should be strongly considered for buildings subject to high internal air pressures such as airplane hangars and buildings with many loading bays such as warehouse facilities.

B. The National Roofing Contractor's Association recommends the installation of vapor retarders when interior relative humidity is 45% or greater and the outside mean average January temperature is below 40° F.

C. Install a vapor retarder over a suitable substrate with all side and end laps and all penetrations sealed in accordance with the manufacturer's instructions. The vapor

retarder may be loosely laid or adhered with the manufacturer's recommended adhesive. In reroofing where the existing built-up roof is to remain, the built-up roof may be an adequate vapor retarder as long as all splits or tears are repaired in order to provide a total barrier to vapor penetration.

3.05 Wood Nailers

A. Wood nailers are required at all roof perimeter edges where metal edging and gutter systems are specified or where indicated in Mule-Hide's published Standard TPO Details.

B. Nailers shall be firmly anchored to the decks at a maximum 2'-0" o.c. and shall resist a pullout force of 200 lbs./linear foot in any direction. A 1/2" vent space shall be provided between adjacent lengths of nailers. Fasteners shall be installed within 6 inches of each end. Spacing and fastener embedment shall conform to Factory Mutual Loss Prevention Data Sheet 1-49.

C. Height of nailers shall match the surface level of the insulation and roof membrane. The width of the wood nailer shall extend beyond the metal flange to prevent damage to the membrane.

D. All woodwork to be reused shall resist a minimum force of 200 lbs/linear foot in any direction and shall be free of rot.

E. Wood nailers with creosote and asphaltic preservatives are not acceptable. Pressure treated lumber is not required on new construction unless specified by the architect.

3.06 Insulation Installation

A. Mule-Hide accepted roof insulations shall be installed in accordance with Mule-Hide specifications.

B. Mule-Hide accepted roof insulations shall be secured to the roof deck in accordance with Mule-Hide's requirements utilizing Mule-Hide fasteners or approved compatible fasteners. An approved low-rise foam adhesive for each layer may be substituted for mechanically fastening through the top layer.

C. All roof insulation shall be neatly cut to fit around all penetrations and projections with a maximum allowable gap of 1/4-inch.

D. Open joints shall be repaired with like insulation material.

E. Insulation shall be feathered or tapered to provide a minimum sump area of 36" x 36" where possible at all drains. Crickets and saddles may be installed beneath the specified insulation where possible. Crickets and saddles made from non-compatible insulations materials must be overlaid with an acceptable insulation or underlayment.

F. Install no more roof insulation in one day than can be covered with the Mule-Hide TPO Membrane or when the onset of inclement weather is anticipated.

G. Insulation installed over steel decks shall be checked so that no edges are left unsupported along the flutes. All insulations shall be of sufficient thickness and density to prevent breakage under normal roof construction traffic.

H. When installing insulation, the end joints of each row of insulation shall be offset against the previous row. When more than one layer of insulation is to be used, succeeding layers are to be laid staggered in relation to the previous layer of insulation and all joints shall be offset.

I. When a Mule-Hide Premium Warranty is requested, only Mule-Hide labeled insulation may be used unless written approval is obtained, prior to job bid, for an alternative insulation.

J. Insulation other than Mule-Hide labeled insulation must be an FM approved insulation and acceptable to Mule-Hide for use under the Mule-Hide Fully Adhered TPO Self Adhering Roofing System. Refer to the insulation manufacturers guidelines for the appropriate type, size and thickness of the insulation needed for use over the respective substrate and under the Mule-Hide Fully Adhered TPO Self Adhering Roofing System.

K. Mule-Hide's minimum attachment rates shall be as follows:

	Fasteners per 4' x 8' board		
Insulation Type or Overlay	**Field**	**Perimeter**	**Corner**
Approved Polyisocyanurate - Min 2" thick (top layer)	8	12	16
Approved Polyisocyanurate - Min 1.5" up to 2" thick	12	18	24
HD Polyisocyanurate - Min 1/2" thick- Installed over Approved substrate	16	24	32
Dens Deck Prime / Securock - Min 1/4" thick - Installed over Approved Insulation	12	18	24
OSB - Min 7/16" thick - Installed over Approved Insulation	17	25	32
Approved OSB/Polyisocyanurate Composite - Min 2" thick	17	25	32

Contact Mule-Hide's Technical Department for FM approvals and required attachment rates that are determined by deck type, insulation brand, type and thickness. When using multiple layers of insulation or more than one type of insulation, the number of fasteners required per board is determined by the top layer of insulation.

L. Perimeter enhancements

To meet increased uplift requirements in the perimeters and corners of each roof area, additional insulation attachment provisions must be installed as follows:

Perimeters – insulation attachment to be increased 50% over the field attachment requirements with a maximum of one (1) fastener every one (1) square feet.

Corners – insulation attachment to be increased 100% over the field attachment requirements with a maximum of one (1) fastener every one (1) square feet.

1. For Factory Mutual projects, the width of the roof perimeter and corner areas is defined as the smaller of 0.1 times the building lesser plan dimension or 0.4 times the eave height (mean roof height for slopes greater than 2"/12" slope), except for heights greater than 60 ft. The minimum width of the perimeter and corner areas shall not be less than three (3) feet. Contact Mule-Hide Technical Department for Factory Mutual projects exceeding 60 ft. heights.

2. For non Factory Mutual projects, the minimum width of the perimeter and corner areas shall not be less than eight (8) feet.

See Details MHT-UN-108A and MHT-UN-108B

3.07 Membrane Installation

A. General - Unroll the Mule-Hide TPO Membrane and position without stretching. Allow the membrane to relax at least 15 minutes when the temperature is above 60°F, or 30

minutes when the temperature is below 60°F, prior to installation. Inspect and remove any damaged membrane.

B. Membrane should run perpendicular to the direction of steel deck flutes and orientation of wood decks where possible.

C. All membrane overlaps shall be installed to facilitate the flow of water. Seams shall be shingled or run parallel to the flow of water. Backwater seams are not permitted.

D. Mule-Hide Self Adhering TPO membranes have a 3”adhesive free selvage edge along one edge of the membrane. Lap sheets a minimum of 3 inches of adhesive free seam to provide space for a continuous, minimum 2” weld. Membrane overlaps shall be shingled with the flow of water or parallel to the flow of water. All welded field seams shall be a minimum of 2 inches wide. End laps shall be butted and stripped in with TPO-c reinforced membrane, see Detail MHT-FA-104E.

E. The roofing contractor shall check all welded seams for continuity and integrity using a cotter pin puller or other suitable blunt object. The contractor shall make sample test seams each day prior to welding field seams. The contractor shall, using scrap material, run at least two test seams, each a minimum of 2' long. Each test seam shall be used to determine adequate seam strength and to ensure the equipment has warmed up, is operating properly and proper settings have been determined. This should be done each time the equipment is turned on after a cool down period.

F. Perimeter - When installing the Mule-Hide Fully Adhered TPO Self Adhering Roofing membrane system, it is not necessary to install Half Sheets parallel with the perimeter. Full size sheets should be used everywhere practical to minimize the number of field seams. In place of Half Sheets, additional fasteners are installed in the insulation in the perimeter areas as defined in 3.06.L Perimeter Enhancements. Weld all laps (seams and end laps) continuously with a minimum weld width of 2 inches. All field welds shall be completed with an automatic welder. Perimeter areas shall be determined by one of the following methods:

1. Mule-Hide Technical Bulletin TPO-FA01-2006, Standard Fastening Patterns and Guidelines. Mule-Hide defines the minimum perimeter area as 8’ in from the roof edge along all exterior roof edges.

2. For Factory Mutual insured buildings, follow guidelines in FM's Loss Prevention Data Sheet 1-29. Contact Mule-Hide Warranty Department for fastener spacing for compliance with FM 1-60 and 1-90 requirements.

3.08 Field Sheet Attachment

A. General

1. The 10‘ wide Mule-Hide TPO Self Adhering Membrane is fully adhered to an approved insulation or substrate with Factory Applied Pressure-Sensitive Adhesive. Position membrane over substrate with minimum 3” overlap at lap seams, and positioned so that laps will shed water. Allow the membrane to relax at least 15 minutes prior to fastening when temperatures are 60º F and above or 30 minutes when temperatures are below 60° F. **CAUTION**: Keep the protective packaging of the Mule-Hide Heat-Weld Membrane intact until ready to use.

B. Position TPO Self Adhering membrane over the acceptable substrate.

C. Fold membrane sheet back so half the underside is exposed.

D. Remove the release liner on one half of the sheet starting from the split in the liner at the

middle of the sheet. The liner should be removed at an angle to reduce risk of splitting or tearing.

E. Roll the membrane onto the substrate while avoiding wrinkles. To achieve the best adhesion, the membrane should be rolled onto the substrate at an angle with 75 lb weighted roller. When applying the Mule-Hide Fully Adhered TPO Self Adhering membrane it is recommended to maintain a large curve on the leading edge of the membrane. This will help eliminate creases and bubbles that cannot be removed after the sheet is in place.

F. Fold back the remaining half of the sheet and repeat the above process.

G. Do not run any seams through field drains or sumps. Any seams running through drains shall be cut out and target patches (36” x 36”) shall be installed.

3.09 Welding of Lap Areas

A. General

1. The Mule-Hide TPO Roofing membrane is to be hot air welded only. Seaming "membrane to membrane" and "flashing/detail membrane to membrane" shall only be done by hot air welding.

2. All surfaces to be welded shall be clean and dry.

3. Side laps have a selvage edge that allows them to be heat welded together. End laps must be butted together and covered with a minimum 6" wide strip of reinforced membrane that is heat welded along all edges, refer to Mule-Hide Detail # MHT-UN-104E. Apply cut edge sealant to all cut edges of reinforced membrane.

B. Hot Air Welding

1. Machines for hot air welding are available from several different sources. Each manufacturer's instructions for use shall be followed, as well as all local codes regarding electric grounding, supply and other related functions. Since most automatic welding machines require 218 to 230 volts, the use of a portable generator on the roof is recommended for greater flexibility. **Mule-Hide requires the use of automatic welding machines for all field sheet seaming. Hand welding is only acceptable for flashings and those seams where the automatic welder cannot be used.**

2. Hand-held welding equipment is also available to weld membrane. After the preheated nozzle tip is applied in the overlap area and the material starts to soften, immediately follow with a silicone hand roller to press the heated membrane surfaces together with slow, even movements. Keep the roller within 1 inch of the nozzle tip. Angle the hot air tool so that the flowing air faces the roller. Seam strength may be tested when cool. For best results, testing seams 8 hours after hot air welding is recommended.

C. “T” Joint Covers

1. Separate “T” joint patches are required over all “T” joints. See detail MHT-UN-105B

D. Seam Patches at Roof/Wall Transitions

1. Mule-Hide requires the installation of Non-Reinforced TPO Flashing Membrane patches over any seam that transitions from the horizontal to the vertical. These patches are to be constructed with Non-Reinforced TPO Flashing Membrane only. Refer to Mule-Hide Detail MHT-UN-105C

E. Daily Welding Equipment Setup

1. The roofing contractor shall make sample test seams each day prior to welding field seams. The contractor shall, using scrap material, run at least two test seams, each a minimum of 2 feet long. Each test seam shall be used to determine adequate seam strength and to ensure the equipment has warmed up, is operating properly and proper settings have been determined. This should be done each time the equipment is turned on after a cool down period.

F. Quality Control of Seams

1. After seaming, the seams are checked for integrity with a probe. Any openings or "fishmouths" are to be repaired with a hand-held hot air tool fitted with a narrow nozzle tip and with a roller. Each day the contractor shall attempt to pull apart several sections of welded seams to test the quality of the welds. Should the welds be deficient, a more thorough examination of the work performed must be carried out and necessary repairs made.

3.10 Additional Membrane Securement (Base Attachment)

A. Additional securement of the TPO membrane by mechanical attachment must be provided at the perimeter of each roof level, base of walls, curbs, skylights, expansion joints, tie-ins, interior walls, bottom of valleys and any angle changes that exceed inclines of 2:12 (2” rise in 12”) and various penetrations as shown in the Mule-Hide Standard Details. All securement must be either horizontally to the roof deck or vertically to the base of the various penetrations as shown in the Mule-Hide Standard Details.

B. The mechanical attachment of the membrane may be achieved by the following methods:

1. 2.4” Seam Plate and appropriate fasteners

a. The 2.4” Seam Plate and appropriate fasteners are placed with the edge of the Seam Plate approximately ½” away from the angle change. Seam Plates may be placed either horizontally or vertically depending on the conditions encountered. Refer to the Mule-Hide TPO Standard Details for proper placement.

2. Mule-Hide All Purpose Bar

a. The Mule-Hide All Purpose Bar is a specially extruded aluminum bar that has pre-punched holes 6 inches on center. Bar may be placed either horizontally or vertically depending on the detail followed. Refer to the Mule-Hide TPO Standard Details for the proper placement. Refer to Mule-Hide Detail # MHT-UN-330 appropriate placement of the All Purpose Bar.

b. The maximum spacing of the fasteners shall not exceed 12 inches on center. Adjoining bars should be spaced approximately ½ inch to 1 inch apart. All bars must be attached at the ends a maximum of 1 inch from the end of each bar. This may require pre-drilling additional holes. All cut bars shall be deburred.

c. Under no circumstances shall the All Purpose Bar be stripped-in with

TPO PS Cover Strip. TPO .045 Reinforced 6” X 100’ product may be used to strip-in the All Purpose Bar with a continuous, minimum of 1-1/2” (40 mm) wide weld.

d. The All Purpose Bar must be installed a minimum of 3 inches to a maximum of 6 inches from inside and outside corners.

3. TPO PS RUSS attachment strip is not approved for use in a TPO Self Adhering roofing system.

4. Drip Apron and Gravel Stop

a. For drip aprons and gravel stops, the metal flange shall extend a minimum of 3 inches onto the wood nailer. The wood nailer must be wider than the metal flange. Approved screw fasteners shall be installed a maximum of 6 inches on center and ½" to 3/4" from the inside edge of the metal flange. Ring shank nails spaced a maximum of 4" on center may also be used.

b. Drip aprons and gravel stops not made out of TPO Coated Metal shall be primed with Mule-Hide’s TPO Primer or Low Voc Primer and stripped with Mule-Hide’s TPO PS Cover Strip. Cleaning the metal with a solvent such as toluene or xylene to remove oil film may be required prior to installing and priming with the TPO Primer. Refer to Mule-Hide detail # MHT-UN-106B.

3.11 Flashing Installation

A. TPO Membrane Flashings

1. All vertical flashings in a Fully Adhered TPO Self Adhering Membrane Roofing System must be standard TPO-c 60 mil membrane.

2. All surfaces to be fully adhered should be compatible, dry and smooth with no excessive surface roughness.

3. On recover projects, all existing base flashings must be removed down to the substrate or covered with new suitable material. If deteriorated areas of substrate are uncovered, repairs must be made to provide a suitable substrate for the new TPO flashings.

B. **TPO Bonding Adhesive, Low VOC Bonding Adhesive, and Low VOC Bonding Adhesive - 1168 (solvent base)**

1. Mix adhesive scraping the sides and bottom of the can (minimum 5 minutes is required) until adhesive is uniform in color. Consult product data sheet for adhesive instructions.

a. Low VOC Bonding Adhesive and Low VOC Bonding Adhesive – 1168 require mechanical stirring (electric drill), both initially and periodically during application.

b. Porous surfaces and substrates may require the application of a prime coat and second coat of Low VOC Bonding Adhesive and Low VOC Bonding Adhesive – 1168 to accomplish proper adhesion.

2. Using a plastic core, medium nap roller, apply a smooth even coat of TPO Bonding Adhesive to back side of membrane and substrate (no globs or

puddles). A nine inch roller will easily fit into a 5-gallon adhesive container. **Do not apply adhesive in area of seam laps.**

3. Coverage rate to be approximately:
   120 square feet per gallon for one surface (membrane or substrate only)
   or
   60 square feet per gallon per finished surface (membrane and substrate)

4. Allow adhesive to dry to a 'tacky' state. Test adhesive by placing a knuckle into it and turning your wrist a one-quarter turn. Adhesive is ready to mate when it is tacky but does not string when knuckle is lifted.

5. Care must be taken to ensure proper drying. Avoid thin layers of adhesive which can result in over drying and improper adhesion.

6. Roll coated membrane onto substrate being careful to not wrinkle the sheet or trap air bubbles. Once membrane is mated to the substrate, carefully roll the membrane with a 2-inch wide rubber hand roller to promote maximum positive contact between the membrane and the substrate.

7. TPO Membrane Flashings shall extend a minimum of 6 inches onto the field sheet and be adhered securely. There shall be a minimum of 2 inches between the front of the fastener plates and the edge of the sheet to allow for heat welding. All side laps are to overlap a minimum of 2 inches. All side laps are to overlap a minimum of 2 inches.

8. **Areas of the flashings and membrane to be welded are not to have TPO Bonding Adhesive applied to them.**

9. Extended drying times can be expected during cool, overcast, humid, shaded, or late day applications. The adhesive must be dry (but still tacky) before mating surfaces to avoid permanent blisters due to trapped solvents.

10. All flashings shall be extended a minimum of 8 inches above roof membrane level and be terminated unless previously accepted by the owner or his representative and the Mule-Hide Technical Department. All flashings shall be hot air welded at their connections with the roofing membrane. Apply Cut Edge Sealant at all welded edges of cut membrane flashings. Refer to Mule-Hide TPO Standard Details for more information.

    NOTE: After flashing is adhered in place, promote full contact adhesion by going back over entire area with a 2-inch rubber hand roller.

C. **WBBA 2000** (Water Base Bonding Adhesive)

1. Mix adhesive scraping the sides and bottom of the can (minimum 5 minutes is required) until adhesive is uniform in color. Consult product data sheet for adhesive instructions.

2. Using a 9" wide, ¼" or 3/8" nap roller, apply a smooth even coat of WBBA-2000 adhesive to back side of membrane and substrate (no globs or puddles). A nine inch roller will easily fit into a 5-gallon adhesive container. **Do not apply adhesive in area of seam laps.**

3. Coverage rate to be approximately:
   120 square feet per gallon for one surface (membrane or substrate only)
   or
   60 square feet per gallon per finished surface (membrane and substrate)

4. Allow adhesive to dry until it turns translucent and does not transfer to a dry finger or pull away from the substrate. WBBA-2000 adhesive will take a longer time to dry. Adhesive must remain tacky.

5. Mate surfaces together avoiding wrinkles. Immediately roll the bonded area of the sheet with a 2-inch wide rubber hand roller to promote maximum positive contact between the membrane and the substrate. Overlap all adjacent flashing sheets a minimum of 2 inches.

6. **Do not apply adhesive in area to be heat-welded.**

7. Extended drying times can be expected during cool, overcast, humid, shaded, or late day applications. The adhesive must be dry (but still tacky) before mating surfaces to avoid permanent blisters due to trapped moisture.

8. Overlap all adjacent flashing sheets a minimum of 2 inches. TPO Membrane Flashings shall extend a minimum of 6 inches onto the field sheet and be adhered securely. There shall be a minimum of 2 inches between the front of the fastener plates and the edge of the sheet to allow for heat welding. All side laps are to overlap a minimum of 2 inches.

9. All flashings shall be extended a minimum of 8 inches above roof membrane level and be terminated unless previously accepted by the owner or his representative and the Mule-Hide Technical Department. All flashings shall be hot air welded at their connections with the roofing membrane. Apply Cut Edge Sealant at all welded edges of cut membrane flashings. Refer to Mule-Hide TPO Standard Details for more information.

   NOTE: After flashing is adhered in place, promote full contact adhesion by going back over entire area with a 2-inch rubber hand roller.

10. All flashings shall be hot air welded at their connections with the roofing membrane. All hand welds shall be a minimum of 1-1/2" wide.

11. All flashings shall be properly terminated according to Mule-Hide's published Standard Details.

NOTE: When using Mule-Hide All-Purpose Bar under Counterflashing to terminate wall flashing or when coping is used, TPO Bonding Adhesive, Low VOC Bonding Adhesive, Low VOC Bonding Adhesive – 1168, or WBBA 2000 Bonding Adhesive may be eliminated when flashing height is 12” - 18” or less, depending on the type of termination. Refer to Mule-Hide’s published Standard TPO Details for additional information.

3.12 Drains, Expansion Joints, Pitch Pans

A. Roof Drains

1. Prepare the surface around each drain to prevent any distortion, tenting, or bridging of the membrane. A smooth transition shall be provided from the roof surface to the surface of the drain bowl/clamping ring.

2. All existing roofing materials and metal flashings shall be removed.

3. Mule-Hide requires the application of one full tube of Water Cut-Off Mastic per drain applied to the drain bowl, under the membrane, where the clamping ring will be seated. This will provide a continuous seal between the membrane and

the drain bowl.

4. Do not run field seams through drains or sumps. If sheet layout causes a seam to fall in line with a drain, a target patch (minimum 36” x 36”) shall be required.

B. Expansion Joints

1. Refer to Mule-Hide’s published Standard TPO Details for application methods for flashing expansion joints.

C. Pitch Pans

1. Install and flash pitch pans as indicated in Mule-Hide’s published Standard TPO Details. All pitch pans shall be filled with Thermoplastic Pourable Sealant.

3.13 Walkway Installation

Walkways should be provided in areas where routine rooftop maintenance occurs and in areas where regular rooftop traffic is expected.

A. TPO Walkway Roll Installation

1. Install TPO Walkway Rolls over clean, dry surfaces.

2. Layout areas where TPO Walkway Rolls are to be installed with most of the material being oriented so that it is placed between field seams with each adjacent and abutting section gapped a minimum of 6". Do not install walkway pads over seams.

3. Heat weld the perimeter of the properly positioned TPO Walkway Roll. Check seams for any voids or inconsistencies that might prevent watertightness.

B. Precast Pavers

1. Install precast paver systems acceptable to Mule-Hide over one layer of 6 oz. HP Protection Mat. Contact Mule-Hide for other acceptable slipsheets.

3.14 Temporary Tie-ins

A. Install temporary cutoffs around incomplete edges of roofing assembly at the end of each day's work and when work must be postponed due to inclement weather. Straighten the insulation line using pieces of insulation loosely laid, and seal the Mule-Hide TPO membrane to the deck or existing membrane. Use a heavy application of roof cement at least six inches in width overlaid with an embedded reinforcement on gravel surfaced roofs. Use polyurethane sealant, low rise foam adhesive, or pourable sealer to seal onto single plies, smooth BUR, or modified bitumen roofs. Remove the temporary seals completely when work resumes, cutting out the contaminated membrane. Remove all sealant, contaminated membrane, insulation fillers, etc. from the work area and properly dispose off-site.

End of Section

This specification represents the applicable information available at the time of its publication. Mule-Hide reserves the right to change this information at any time. Contact Mule-Hide or check the Mule-Hide website (www.mulehide.com) for the latest updates regarding changes or modifications to this specification.

MULE-HIDE PRODUCTS CO., INC
Fully Adhered Roofing System
SUMMARY SPECIFICATION

TPO Systems

This Summary Specification is a brief overview of Mule-Hide Product's specification and requirements for a Fully Adhered Mule-Hide Reinforced TPO Roofing System and is intended for use as a submittal in a bid package. Specifier's and Mule-Hide Warranty Eligible Contractors must comply with Mule-Hide Product's specifications and requirements prior to design or bid.

Part 1 General

1.01 Description

The Mule-Hide Fully Adhered Reinforced TPO Roofing System utilizes a (maximum) 12' wide, scrim reinforced Mule-Hide TPO membrane in thickness of 45, 60, or 80 mil. Approved insulation is attached to the substrate with either Mule-Hide Insulation fasteners and plates or an approved insulation adhesive, and the TPO membrane is bonded to the insulation with TPO Bonding Adhesive or WBBA 2000 Water Base Bonding Adhesive. The adjoining sheets are overlapped approximately 3" and seamed together with a min 2" wide heat weld.

1.02 Quality Assurance

A. The roofing system must be installed by a Mule-Hide Warranty Eligible Contractor in accordance with installation guidelines and detail drawings as approved by Mule-Hide. Prior written approval from the Mule-Hide Warranty Department is required for all deviations from Mule-Hide's published specifications and details.

B. Projects requesting a Labor and Material Warranty will be inspected by a Mule-Hide Representative to verify that Mule-Hide's installation and material requirements have been met.

C. Mule-Hide roofing systems offer a variety of Underwriters Laboratories (UL), Factory Mutual (FM) and other ratings. Consult the appropriate approval guides and Mule-Hide Products for specific code approvals.

1.03 Submittals

A. To ensure compliance with Mule-Hide's warranty requirements contact the Mule-Hide Warranty Department if any of the following conditions exist.
   1. Specified wind speed warranty greater than 55 MPH.
   2. Building height > 100'
   3. Projects located in coastal or high wind zones.
   4. Pressurized buildings
   5. Cold Storage or Freezer Buildings
   6. Membrane exposed to chemicals

B. Submit a completed Warranty Application form to Mule-Hide prior to biding. Also include fastener pullout testing results as required for non-standard substrates.

C. All projects must have a Mule-Hide warranty application number assigned prior to inspection.

1.04 Product Delivery, Storage, and Handling

A. Deliver materials to the job site in original, unopened containers, with the manufacturer's name, brand name and installation instructions.

B. Store all materials in a dry, clean area protected from the elements, as per manufacturer's recommendations.

1.05 Job Conditions

A. All existing wet or damaged roofing materials must be removed and replaced with new materials.

B. All existing phenolic insulation and sprayed-in-place urethane roofs must be removed.

C. The specifier must determine the use and placement of vapor retarders. Consult ASHRAE (American Society of Heating, Refrigerating, and Air-Conditioning Engineers, Inc.) and NRCA (National Roofing Contractors Association) publications.

E. Coordinate work between all trades to avoid traffic over completed sections of roofing.

1.06 Warranty.

Fees are required for all Labor and Material (System) Warranties. System Warranties must be obtained through a Mule-Hide Warranty Eligible Applicator. All projects requesting a System Warranty must be inspected by a Mule-Hide Representative. Components of the roofing system must be supplied by Mule-Hide. Warranty covers only Mule-Hide supplied materials. Sample warranties are available upon request. Contact Mule-Hide Warranty Department for warranty requirements.

Part 2 Products

2.01 General

A. The components of this roofing system are to be manufactured, supplied, or approved in writing by Mule-Hide Products.

2.02 Membrane
Mule-Hide White, Gray, or Tan, reinforced 45, 60, or 80-mil thick Thermoplastic Polyolefin (TPO) membrane is used for this system. The membrane is available in a variety of widths up to 12' and in lengths of 100'. Refer to our Product Data Sheet for physical properties and other information.

2.03 Related Materials
Mule-Hide products include: Reinforced and Non-Reinforced Flashings, Bonding Adhesives, TPO Cut-Edge Sealant, TPO Coated Metal, Membrane fasteners and discs, Thermoplastic One-Part Pourable Sealer, All-Purpose Bar, TPO Walkway Roll, Universal Single Ply Sealant, and other components.

Part 3 Execution

3.01 General

A. Work should begin at the highest point of the roof level and proceed to the lowest point. Work should be completed on a daily bases including flashings, terminations, and daily seals.

B. Prepare the existing roof deck or substrate according to Mule-Hide design guides and full-system specifications prior to applying the new roofing system.

3.02 Roof Deck Criteria

A. A proper substrate shall be provided by the building owner. The structure shall be able to withstand normal construction loads and live loads.

B. Substrate must allow for drainage so that all water is removed within 48 hours after a rain.

3.03 Substrate Preparation

A. Re-cover projects - All wet or damaged materials must be removed and replaced with new materials.

B. Substrate must be clean, level, and smooth so that the insulation lays flat. Fresh applications of bitumen based roof cement must be removed or covered.

3.04 Installation
Refer to the applicable Product Data Sheets and Material Safety Data Sheets for cautions and warnings.

A. Insulation Attachment
Attach roof insulation with Manufacturer supplied roofing fasteners and plates. Attachment rates and insulation requirements will vary depending upon substrate and desired wind uplift. Consult Mule-Hide Warranty Department for attachment requirements.

B. Membrane Installation and Hot Air Welding
Place membrane over substrate with minimum 3" overlap at lap seams and positioned so that laps will shed water. Allow membrane to relax. After membrane has relaxed, fold membrane back so that half of the underside is exposed. Apply TPO Bonding Adhesive or WBBA 2000 Water Base Bonding Adhesive as per manufacturer's instructions. Fold back the unbonded half of membrane and repeat bonding procedure. Hot-air weld seams with automatic welder to achieve a min 2" wide heat weld. Hand welding of field seams is not acceptable.

C. Additional Membrane Securement
The membrane must be secured at the perimeter of each individual roof area, projection, and any angle change that exceeds 2" per lineal foot. Consult Mule-Hide's published detail drawings.

D. Membrane Flashing
All existing base flashings are to be removed or covered with a suitable material. Install new membrane flashings as per manufacturer’s details and guidelines. Flashings must be terminated along top edge as per appropriate Mule-Hide detail.

E. Other Related Work

1. Walkways should be provided in areas where regular rooftop traffic is expected. Walkways are considered a maintenance item and are excluded from the Mule-Hide warranty.

2. Mule-Hide TPO Walkway Rolls are to be installed over clean, dry surfaces, with a minimum 6" spacing over field seams. Hot air weld the perimeter of the Walkway Roll to the field membrane.

3. Concrete pavers may be used if installed over one layer of HP Protection Mat.

4. Copings, counter flashing and other metal work shall be fastened to resist wind uplift and prevent buckling. Metal should be sealed to prevent moisture infiltration.

This summary specification represents the applicable information available at time of publication. Mule-Hide reserves the right to change this information at any time. Contact Mule-Hide Products or visit our website at www.mulehide.com for the latest updates, changes, or modifications to this summary specification.

MULE-HIDE PRODUCTS CO., INC
Fleece Back/Fleece Back Plus
Fully Adhered Roofing System
SUMMARY SPECIFICATION

This Summary Specification is a brief overview of Mule-Hide Product's specifications and requirements for a Fully Adhered Mule-Hide Reinforced TPO Fleece Back or Fleece Back Plus Roofing System and is intended for use as a submittal in a bid package. Specifier's and Mule-Hide Warranty Eligible Contractors must comply with Mule-Hide Product's specifications and requirements prior to design or bid.

Part 1 General

1.01 Description

The Mule-Hide Fully Adhered TPO Fleece Back Roofing System utilizes a (maximum) 12' wide, scrim reinforced Mule-Hide TPO Fleece Back membrane in thickness of 45 mil (FB-45), 60 mil (FB-60), or 80 mil (FB-80) bonded to a 55-mil polyester fleece backing. The Mule-Hide Fully Adhered TPO Fleece Back Plus Roofing System utilizes a (maximum) 12' wide, scrim reinforced Mule-Hide TPO Fleece Back membrane in thickness of 45 mil (FBP-45), 60 mil (FBP-60), or 80 mil (FBP-80) bonded to special 10 oz/yd^2 stain resistant, asphalt compatible, polyester fleece backing. Approved insulation is attached to the substrate with either Mule-Hide Insulation fasteners and plates or an approved insulation adhesive. TPO Fleece Back membrane is bonded to the insulation with WBBA-2000 bonding adhesive. TPO Fleece Back Plus membrane is bonded to the insulation with hot asphalt. The adjoining sheets are overlapped approximately 3" and seamed together with a min 2" wide heat weld.

1.02 Quality Assurance

A. The roofing system must be installed by a Mule-Hide Warranty Eligible Contractor in accordance with installation guidelines and detail drawings as approved by Mule-Hide. Prior written approval from the Mule-Hide Warranty Department is required for all deviations from Mule-Hide's published specifications and details.

B. Projects requesting a Labor and Material Warranty will be inspected by a Mule-Hide Representative to verify that Mule-Hide's installation and material requirements have been met.

C. Mule-Hide roofing systems offer a variety of Underwriters Laboratories (UL), Factory Mutual (FM) and other ratings. Consult the appropriate approval guides and Mule-Hide Products for specific code approvals.

1.03 Submittals

A. To ensure compliance with Mule-Hide's warranty requirements contact the Mule-Hide Warranty Department if any of the following conditions exist.
   1. Wind speed warranty greater than 55 MPH.
   2. Building height > 100'
   3. Located in coastal or high wind zones.
   4. Pressurized buildings
   5. Cold Storage or Freezer Buildings
   6. Membrane exposed to chemicals

B. Submit a completed Warranty Application form to Mule-Hide prior to biding. Also include fastener pullout testing results as required for non-standard substrates.

C. All projects must have a Mule-Hide warranty application number assigned prior to inspection.

1.04 Product Delivery, Storage, and Handling

A. Deliver materials to the job site in original, unopened containers, with the manufacturer's name, brand name and installation instructions.

B. Store all materials in a dry, clean area protected from the elements, as per manufacturer's recommendations.

1.05 Job Conditions

A. All existing wet or damaged roofing materials must be removed and replaced with new.

B. All existing phenolic insulation and sprayed-in-place urethane roofs must be removed.

C. The specifier must determine the use and placement of vapor retarders. Consult ASHRAE (American Society of Heating, Refrigerating, and Air-Conditioning Engineers, Inc.) and NRCA (National Roofing Contractors Association) publications.

E. Coordinate work between all trades to avoid traffic over completed sections of roofing.

1.06 Warranty.

Fees are required for all Labor and Material (System) Warranties. System Warranties must be obtained through a Mule-Hide Warranty Eligible Applicator. All projects requesting a System Warranty must be inspected by a Mule-Hide Representative. Components of the roofing system must be supplied by Mule-Hide. Warranty covers only Mule-Hide supplied materials. Sample warranties are available upon request. Contact Mule-Hide Warranty Department for warranty requirements.

Part 2 Products

2.01 General

A. The components of this roofing system are to be manufactured, supplied, or approved in writing by Mule-Hide Products.

2.02 Membrane

Mule-Hide White, Gray, or Tan, reinforced FB-45, FB- 60, or FB-80 thick Thermoplastic Polyolefin (TPO) Fleece Back membrane or Mule-Hide White, Gray, or Tan, reinforced FBP-45, FBP-60 or FBP-80 Fleece Back Plus membrane is used for this system. The membrane is available in a variety of widths up to 12' and in lengths of 100'. Refer to Product Data Sheet sfor physical properties and other information. Mule-Hide standard TPO membrane is used for flashings.

2.03 Related Materials

Mule-Hide products include: Reinforced and Non-Reinforced Flashings, Bonding Adhesives, TPO Cut-Edge Sealant, TPO Coated Metal, Membrane fasteners and discs, Thermoplastic One-Part Pourable Sealer, All-Purpose Bar, TPO Walkway Roll, Universal Single Ply Sealant, and other components.

Part 3 Execution

3.01 General

A. Work should begin at the highest point of the roof level and proceed to the lowest point. Work should be completed on a daily bases including flashings, terminations, and daily seals.

B. Prepare the existing roof deck or substrate according to Mule-Hide design guides and full-system specifications prior to applying the new roofing system.

3.02 Roof Deck Criteria

A. A proper substrate shall be provided by the building owner. The structure shall be able to withstand normal construction loads and live loads.

B. Substrate must allow for drainage so that all water is removed within 48 hours after a rain.

3.03 Substrate Preparation

A. Re-cover projects - All wet or damaged materials must be removed and replaced with new materials.

B. Substrate must be clean, level, and smooth allowing insulation to lay flat. Fresh applications of bitumen based roof cement must be removed or covered.

3.04 Installation

Refer to Product Data Sheets and Material Safety Data Sheets for cautions and warnings.

A. Insulation Attachment

Attach roof insulation with Manufacturer supplied roofing fasteners and plates or approved Insulation adhesive. Attachment rates and insulation requirements will vary depending upon substrate and desired wind uplift. Consult Mule-Hide Warranty Department for attachment requirements.

B. Membrane Installation and Hot Air Welding

Place membrane over substrate with minimum 3" overlap at lap seams and positioned so that laps will shed water. Allow membrane to relax. After membrane has relaxed, the membrane is adhered to the substrate with WBBA-2000 Bonding Adhesive for Fleece Back membrane or Hot Asphalt for Fleece Back Plus membrane as per manufacturer's instructions. Hot-air weld seams with automatic welder to achieve a min 2" wide heat weld. Hand welding of field seams is not acceptable.

C. Additional Membrane Securement

The membrane must be secured at the perimeter of each individual roof area, projections, and any angle change exceeding 2" per foot. Consult Mule-Hide's published detail drawings.

D. Membrane Flashing

All existing base flashings are to be removed or covered with a suitable material. Install new membrane flashings as per manufactures details and guidelines. Flashings must be terminated along top edge as per appropriate Mule-Hide detail. All vertical flashings in a Fleece Back or Fleece Back Plus system must be standard TPO-c membrane.

E. Other Related Work

1. Walkways should be provided in areas where regular rooftop traffic is expected. Walkways are considered a maintenance item and are excluded from the Mule-Hide warranty.

2. Mule-Hide TPO Walkway Rolls are to be installed over clean, dry surfaces, with a minimum 6" spacing over field seams, with perimeter of the Walkway Roll welded to the field membrane.

3. Concrete pavers may be used if installed over one layer of HP Protection Mat.

4. Copings, counter flashing and other metal work shall be fastened to resist wind uplift and prevent buckling. Metal should be sealed to prevent moisture infiltration.

This summary specification represents the applicable information available at time of publication. Mule-Hide reserves the right to change this information at any time. Contact Mule-Hide Products or visit our website at www.mulehide.com for the latest updates, changes, or modifications to this summary specification.

MULE-HIDE PRODUCTS CO., INC
Fully Adhered Self-Adhering Roofing System
SUMMARY SPECIFICATION

TPO Systems

This Summary Specification is a brief overview of Mule-Hide Product's specification and requirements for a Fully Adhered Mule-Hide Reinforced TPO Self-Adhering Roofing System and is intended for use as a submittal in a bid package. Specifier's and Mule-Hide Warranty Eligible Contractors must comply with Mule-Hide Product's specifications and requirements prior to design or bid.

Part 1 General

1.01 Description

The Mule-Hide Fully Adhered Reinforced Self-Adhering TPO Roofing System utilizes a 10' wide, scrim reinforced 60-mil thick Mule-Hide TPO membrane laminated to an elastomeric pressure-sensitive adhesive. Approved insulation is attached to the substrate with either Mule-Hide Insulation fasteners and plates or an approved insulation adhesive. The TPO membrane is fully adhered to the substrate by removing the release liner on the laminated adhesive and rolling the membrane in place. The adjoining sheets are overlapped approximately 3" and seamed together with a min 2" wide heat weld.

1.02 Quality Assurance

A. The roofing system must be installed by a Mule-Hide Warranty Eligible Contractor in accordance with installation guidelines and detail drawings as approved by Mule-Hide. Prior written approval from the Mule-Hide Warranty Department is required for all deviations from Mule-Hide's published specifications and details.

B. Projects requesting a Labor and Material Warranty will be inspected by a Mule-Hide Representative to verify that Mule-Hide's installation and material requirements have been met.

C. Mule-Hide roofing systems offer a variety of Underwriters Laboratories (UL), Factory Mutual (FM) and other ratings. Consult the appropriate approval guides and Mule-Hide Products for specific code approvals.

1.03 Submittals

A. To ensure compliance with Mule-Hide's warranty requirements contact the Mule-Hide Warranty Department if any of the following conditions exist.
   1. Specified wind speed warranty greater than 55 MPH.
   2. Building height > 60'
   3. Projects located in coastal or high wind zones.
   4. Pressurized buildings
   5. Cold Storage or Freezer Buildings
   6. Membrane exposed to chemicals

B. Submit a completed Warranty Application form to Mule-Hide prior to bidding. Also include fastener pullout testing results as required for non-standard substrates.

C. All projects must have a Mule-Hide warranty application number assigned prior to inspection.

1.04 Product Delivery, Storage, and Handling

A. Deliver materials to the job site in original, unopened containers, with the manufacturer's name, brand name and installation instructions.

B. Store all materials in a dry, clean area protected from the elements, as per manufacturer's recommendations.

1.05 Job Conditions

A. All existing wet or damaged roofing materials must be removed and replaced with new materials.

B. All existing phenolic insulation and sprayed-in-place urethane roofs must be removed.

C. The specifier must determine the use and placement of vapor retarders. Consult ASHRAE (American Society of Heating, Refrigerating, and Air-Conditioning Engineers, Inc.) and NRCA (National Roofing Contractors Association) publications.

E. Coordinate work between all trades to avoid traffic over completed sections of roofing.

1.06 Warranty.

Fees are required for all Labor and Material (System) Warranties. System Warranties must be obtained through a Mule-Hide Warranty Eligible Applicator. All projects requesting a System Warranty must be inspected by a Mule-Hide Representative. Components of the roofing system must be supplied by Mule-Hide. Warranty covers only Mule-Hide supplied materials. Sample warranties are available upon request. Contact Mule-Hide Warranty Department for warranty requirements.

Part 2 Products

2.01 General

A. The components of this roofing system are to be manufactured, supplied, or approved in writing by Mule-Hide Products.

2.02 Membrane

Mule-Hide White, Gray, or Tan, reinforced 60-mil thick Thermoplastic Polyolefin (TPO) membrane laminated to an elastomeric pressure-sensitive adhesive is used for this system. The membrane is available in 10' wide rolls that are 100' in length. Refer to our Product Data Sheet for physical properties and other information.

2.03 Related Materials

Mule-Hide products include: Reinforced and Non-Reinforced Flashings, Bonding Adhesives, TPO Cut-Edge Sealant, TPO Coated Metal, Membrane fasteners and discs, Thermoplastic One-Part Pourable Sealer, All-Purpose Bar, TPO Walkway Roll, Universal Single Ply Sealant, and other components.

Part 3 Execution

3.01 General

A. Work should begin at the highest point of the roof level and proceed to the lowest point. Work should be completed on a daily bases including flashings, terminations, and daily seals.

B. Prepare the existing roof deck or substrate according to Mule-Hide design guides and full-system specifications prior to applying the new roofing system.

3.02 Roof Deck Criteria

A. A proper substrate shall be provided by the building owner. The structure shall be able to withstand normal construction loads and live loads.

B. Substrate must allow for drainage so that all water is removed within 48 hours after a rain.

3.03 Substrate Preparation

A. Re-cover projects - All wet or damaged materials must be removed and replaced with new materials.

B. Substrate must be clean, level, and smooth so that the insulation lays flat. Fresh applications of bitumen based roof cement must be removed or covered.

3.04 Installation

Refer to the applicable Product Data Sheets and Material Safety Data Sheets for cautions and warnings.

A. Insulation Attachment

Attach roof insulation with Manufacturer supplied roofing fasteners and plates. Attachment rates and insulation requirements will vary depending upon substrate and desired wind uplift. Consult Mule-Hide Warranty Department for attachment requirements.

B. Membrane Installation and Hot Air Welding

Place membrane over substrate with minimum 3" overlap at lap seams and positioned so that laps will shed water. Allow membrane to relax. After membrane has relaxed, fold membrane back so that half of the underside is exposed. Remove release liner on one half of the membrane, starting from the split in the liner at the middle of the sheet and then roll with a 75 pound roller. Fold back the unbonded half of membrane and repeat bonding procedure. Hot-air weld seams with automatic welder to achieve a min 2" wide heat weld. Hand welding of field seams is not acceptable.

C. Additional Membrane Securement

The membrane must be secured at the perimeter of each individual roof area, projection, and any angle change that exceeds 2" per lineal foot. RUSS strips are not approved for use on Self-Adhering membranes. Consult Mule-Hide's published detail drawings.

D. Membrane Flashing

All existing base flashings are to be removed or covered with a suitable material. Install new membrane flashings as per manufactures details and guidelines. Flashings must be terminated along top edge as per appropriate Mule-Hide detail.

E. Other Related Work

1. Walkways should be provided in areas where regular rooftop traffic is expected. Walkways are considered a maintenance item and are excluded from the Mule-Hide warranty.

2. Mule-Hide TPO Walkway Rolls are to be installed over clean, dry surfaces, with a minimum 6" spacing over field seams. Hot air weld the perimeter of the Walkway Roll to the field membrane.

3. Concrete pavers may be used if installed over one layer of HP Protection Mat.

4. Copings, counter flashing and other metal work shall be fastened to resist wind uplift and prevent buckling. Metal should be sealed to prevent moisture infiltration.

This summary specification represents the applicable information available at time of publication. Mule-Hide reserves the right to change this information at any time. Contact Mule-Hide Products or visit our website at www.mulehide.com for the latest updates, changes, or modifications to this summary specification.

SECTION 5

MULE-HIDE PRODUCTS CO., INC.

TPO Mechanically Attached Specification

TPO Mechanically Attached RhinoBond Specification Attachment

TPO Mechanically Attached Summary Specification

TPO Rhinobond Attachment Method Summary Specification

PLEASE CONSULT THE MULE-HIDE WEBSITE FOR THE MOST CURRENT INFORMATION AT WWW.MULEHIDE.COM

MULE-HIDE PRODUCTS CO., INC.
MECHANICALLY ATTACHED TPO SYSTEM SPECIFICATION

07 54 00/MUL

TABLE OF CONTENTS

PLEASE CONSULT THE MULE-HIDE WEBSITE FOR THE MOST CURRENT INFORMATION AT WWW.MULEHIDE.COM

MULE-HIDE PRODUCTS CO., INC.
MECHANICALLY ATTACHED TPO SYSTEM SPECIFICATION

Revised Oct 2013
07 54 00/MUL

PART 1 - GENERAL

1.01 Description

A. Scope:

1. Furnish and install a Mechanically Attached TPO Roofing Membrane with flashings and accessories necessary to comprise a roofing system. The Mule-Hide TPO products and accessories shall be installed in strict compliance with current specifications and drawings as published by Mule-Hide Products Co., Inc. (“Mule-Hide”).

2. The Mule-Hide Mechanically Attached TPO (Thermoplastic Polyolefin) Membrane Roof System utilizes a 45-mil (.045 inch), 60-mil (.060 inch) or 80-mil (.080 inch) thick reinforced TPO sheet. The TPO membrane is mechanically attached to the roof deck with 2.4” Seam Plates and approved Mule-Hide Fasteners. Adjoining sheets are overlapped a minimum of 5-1/2 inches and welded with a robotic welder. The field membrane is secured at all changes in plane greater than 2” per foot. Note: All membrane thicknesses listed in this specification are nominal thicknesses.

B. Related Work:

The work includes, but is not necessarily limited to the installation of:

1. Vapor Retarder (where specified)
2. Wood Blocking (Nailers)
3. Insulation
4. Slip Sheet (where required)
5. Fasteners
6. Roof Membrane
7. Roof Membrane Flashings
8. Metal Flashings
9. Adhesives
10. Sealants
11. Walkways

Note: Mule-Hide recommends adherence to industry standards (SMACNA) for the installation of any metalwork.

1.02 Quality Assurance

A. The Mule-Hide Mechanically Attached TPO Membrane Roofing System shall be installed by an independent roofing contractor eligible (Warranty Eligible) to apply for Mule-Hide “system warranties” when Standard System or Premium System Warranties are requested.

B. There shall be no deviations from this specification or the Mule-Hide Products Co., Inc. ("Mule-Hide") standard details without prior written approval from Mule-Hide's Warranty Department

C. Upon completion of the installation according to the terms and conditions stated in this specification and in accordance to the information given in the Warranty Application and Pre-Job survey form and any additional approvals which might have been given by Mule-Hide, an authorized representative of Mule-Hide may perform an on-site inspection of the roof to verify that all installation and material requirements have been met.

Note: Inspections are only conducted on projects where a "System Warranty" is requested. Inspections are not conducted on projects not requiring a Mule-Hide System Warranty or when only a "Roofing Membrane Limited Warranty" is requested. The sole purpose of an inspection by a Mule-Hide Representative is not to be a final inspection for the benefit of the Building Owner/Owner's Representative. It is for the benefit of Mule-Hide to determine if a warranty may be offered for the project.

D. Mule-Hide reserves the right to reject any roof system and refuse to issue any warranty on roofs which do not comply with Mule-Hide's specifications or current policies.

1.03 Submittals

A. Prior to the time of bidding, the roofing contractor shall submit to the Owner or Owner's representative the following items:

1. Copies of Mule-Hide specifications and published product data.
2. Samples of each material to be used in the roof system.
3. Specimen copy of Mule-Hide Products Co. warranty
4. Dimensioned shop drawings to include an outline of the roof and appropriate details for flashings and terminations.
5. Certification from insulation, roofing and accessory components manufacturers that all materials supplied comply with identified ASTM and industry standards.
6. Verification that system specifications meet all identified code and insurance requirements including but not limited to the following:

   a. Factory Mutual Research Laboratories
   Norwood, MA

   b. Underwriters Laboratories
   Northbrook, IL

   Note: It is the Building Owner/Owner's Representative's responsibility to determine what submittals are required for the project.

B. Submit to Mule-Hide, prior to the job start, a Heat-Weld System Warranty Application to be reviewed by the Mule-Hide Warranty Department to determine the acceptability of the project based on the information provided.

1. The Heat-Weld System Warranty Application ("Warranty Application") must be completely filled out and should be accompanied with a copy of the written roof specification (if available). Also included should be any requests for deviations to Mule-Hide's standard published specification and details.

2. A roof drawing shall be submitted with the Warranty Application indicating all dimensions and locations of all penetrations.

1.04 Product Delivery, Storage and Handling

A. All products delivered to the job site shall be in their original unopened containers or wrappings and clearly labeled with the manufacturer's name, product identification and date of manufacture.

B. Protect all materials from damage during transit, storage and delivery to the job site. Place all materials on pallets and protect from moisture.

C. Store all materials in a dry, clean area protected from the elements. All rolls of membrane shall be stored flat on pallets.

D. All adhesive and caulking shall be stored at temperatures between 60°F and 80°F.

Materials exposed to lower temperatures affect the workability and performance of the product. Products shall be restored to the above temperature prior to use.

E. All flammable materials shall be stored in a cool, dry area away from open flames and sparks. Follow precautions outlined on containers or supplied by the material manufacturer/supplier.

F. All materials determined as being damaged (confirmed by Mule-Hide) due to improper storage on the job site are to be replaced with new materials

1.05 Job Conditions

A. This specification shall not be considered applicable without the appropriate additional specifications approved by Mule-Hide if it should be determined that any of the following conditions exist:

1. The installation of any Mule-Hide Roof System is in a coastal area or high wind zone.

2. If the Mule-Hide Roof System should exceed the structural load conditions as determined by an architect or Engineer.

3. When chemical or hazardous materials are discharged onto the Mule-Hide Roof System.

B. Mule-Hide TPO roofing materials may be installed in temperatures below 40° F but only after consultation with the Mule-Hide Technical Department as special precautions or procedures may be necessary. The performance of the materials, installation costs and production rates may be affected.

C. The General Contractor or the building owner shall be responsible for providing adequate surfaces and structures to receive the insulation, Mule-Hide Roof System and related sheet metal necessary for the successful completion of the project.

D. Only as much new roofing as can be made watertight each day shall be installed each day. This includes all flashing work.

E. All substrates to receive new insulation, membrane or flashing shall be thoroughly dry. Should surface moisture occur, the contractor shall provide adequate equipment to dry the substrate prior to application of new materials.

F. Prior to and during application, all dirt, debris and dust shall be removed from surfaces to be roofed for both new and reroofing substrates.

G. On all projects where the Mechanically Attached TPO system is specified, it is the responsibility of the independent roofing contractor to have the owner or owner's representative verify the condition of the deck or substrate and to confirm the roof deck can withstand the additional load.

H. Precautions shall be taken to prevent wind blow-off or wind damage during the course of the roofing application. This may necessitate additional securement of temporary construction, materials and equipment.

I. The contractor shall verify and ensure that all roof drain lines are unblocked before starting work. Any blockages found shall be reported to the owner's representative and Mule-Hide's Warranty Department in writing.

J. Temporary waterstops shall be installed at the end of each day's work. Temporary waterstops shall be removed at the start of the next day's work and disposed of properly. Waterstops shall be compatible with all materials.

K. Do not install the Mule-Hide TPO Roofing Membrane in direct contact with any product containing coal tar pitch, creosote or penta-based materials. Consult the Mule-Hide Technical Service Department for special installation requirements.

L. Do not allow contaminants such as petroleum, grease, acid, solvents, vegetable or mineral oil, animal oil, animal fat, etc. or direct steam venting to come into direct contact with the Mule-Hide TPO Roofing Membrane. Contact the Mule-Hide Technical Service Department for recommendations if such conditions exist.

M. The contractor shall follow and comply with all safety regulations as recommended by OSHA.

N. All work shall be scheduled and executed without exposing interior building areas to the effects of inclement weather. The existing building and its contents shall be protected against all risks.

O. Arrange work sequence to avoid use of newly constructed roofing for storage, walking surfaces and equipment movement. Contractor shall provide all necessary protection and barriers to segregate the work areas and prevent damage to adjacent areas. If excessive traffic over newly installed membrane is necessary, contractor shall provide plywood or polyester felt protection to prevent damage. All damaged materials shall be replaced with new materials.

P. All existing roofing materials to be removed for construction shall be immediately removed from the construction site to a dumping area authorized to receive such debris. Any hazardous materials such as asbestos or materials containing asbestos fibers shall be removed and disposed of in accordance with applicable City, State and Federal requirements.

Q. Any unusual or concealed condition discovered during the course of the work is to be reported to the owner and Mule-Hide immediately in writing. Work is to be halted until the owner has responded with a solution to the problems.

R. All local building codes and requirements should be followed where applicable. It is the roofing contractor's sole responsibility to determine and ensure that the roofing system selected complies with all local codes and requirements.

S. Both interior and exterior building areas affected by construction shall be cleaned up and any damaged areas shall be repaired to the owner's satisfaction.

T. Certain project conditions may require modifications to this specification. Contact the Mule-Hide Warranty Department if any of the following conditions exist:

1. Roof heights greater than 60 feet.

2. Geographical location in a 100 mph or greater wind zone, per the ANSI 100 year mean recurrence interval wind isotach.

3. Location with a D exposure as determined in ANSI A58.1

U. When using heat-welding equipment, always review the equipment manufacturer’s instructions, precautions and warnings.

V. Consideration should be given in the project design to problems that can precipitate from the smooth surface characteristic of the Mule-Hide TPO membrane

W. On all reroofing projects and for all lightweight deck systems, pullout tests shall be performed by the independent roofing contractor, fastener manufacturer or owner's representative to verify the condition of the deck or substrate and to confirm system design pullout values. A minimum of 10 pullout tests for areas up to 500 squares, thereafter 2 tests per 100 squares is considered sufficient. Tests should be taken

approximately 60% in perimeters and 40% from field areas. Additional tests shall be performed in areas where the integrity of the deck is questionable. A written report of pullout test results shall be submitted to Mule-Hide's Warranty Department for review.

X. Mechanically attached systems are not allowed over Oriented Strand Board (OSB) decks without prior approval by the Mule-Hide Technical Department. Mule-Hide will not issue system warranties on “As-Built” projects where Mule-Hide did not grant approval prior to the start of the work

1.06 Warranties

All Mule-Hide warranties are available for commercial projects. A Roofing Membrane Limited Warranty for a maximum of 10 years is available for residential projects.

A. Mule-Hide's Roofing Membrane Limited Warranty

Mule-Hide offers a 10, 15, or 20-year Roofing Membrane Limited Warranty ("Warranty") for a charge. The Warranty covers only the Mule-Hide TPO membrane (or portion thereof) determined by Mule-Hide to be defective and resulting in roof leaks. This Warranty does not cover workmanship or other components not supplied by Mule-Hide. Mule-Hide does not perform inspections of the installation before issuing the Roofing Membrane Limited Warranty. A Mule-Hide Warranty Application and the appropriate fee must be submitted to Mule-Hide to obtain this warranty. Proof of purchase may be required.

Note: Projects requesting a 20-year Roofing Membrane Limited Warranty require the use of a minimum 60-mil thick TPO membrane and shall incorporate additional design enhancements as outlined in the 20-year Design Enhancements for TPO Mechanically Attached Roofing System Specification. Mule-Hide recommends that Warranty Applications be submitted for review prior to bidding the project.

B. Mule-Hide's Standard System Warranty

Mule-Hide offers a 10, 15, or 20-year Standard System Warranty ("Standard") for commercial projects for a charge. The Standard warranty is a "No Dollar Limit", labor and material warranty that covers the Mule-Hide labeled membrane and other components supplied by Mule-Hide installed by a Mule-Hide Warranty Eligible Applicator. The Standard warranty does not cover insulation or its attachment system. Metal flashing components not supplied by Mule-Hide are not covered under this warranty. A Mule-Hide Warranty Eligible Applicator must submit a Warranty Application and the appropriate fee to Mule-Hide. Standard warranties require inspections by a Mule-Hide representative.

Note: Projects requesting a 20-year Standard System Warranty require the use of a minimum 60-mil thick TPO membrane and shall incorporate additional design enhancements as outlined in the 20-year Design Enhancements for TPO Mechanically Attached Roofing System Specification. Mule-Hide recommends that Warranty Applications be submitted for review prior to bidding the project.

C. Mule-Hide Premium System Warranty

Mule-Hide offers a 10, 15, or 20-year Premium System Warranty ("Premium") for commercial projects for a charge. The Premium warranty is a "No Dollar Limit", labor and material warranty that covers the Mule-Hide labeled membrane, insulation, other components supplied by Mule-Hide and approved products (such as insulation adhesive or other pre-approved accessories) installed by a Mule-Hide Warranty Eligible Applicator. A Mule-Hide Warranty Eligible Applicator must submit a Warranty Application and the appropriate fee to Mule-Hide. Premium warranties require inspections by a Mule-Hide representative.

Note: Projects requesting a 20-year Premium Warranty require the use of a minimum

60-mil thick TPO membrane and shall incorporate additional design enhancements as outlined in the 20-year Design Enhancements for TPO Mechanically Attached Roofing System Specification. Mule-Hide recommends that Warranty Applications be submitted for review prior to bidding the project.

D. Metal flashing products supplied by Mule-Hide (Mule-Hide Metal Accessories) and installed by a Mule-Hide Warranty Eligible Applicator will be covered under a Standard or Premium System warranty.

E. Standard and Premium System warranties are not available for residential projects.

F. TPO tie-ins to built-up (BUR) or any other type of roof system are not covered by Mule-Hide warranties.

G. Contact Mule-Hide for other extended warranties that may be available.

H. Terms and Conditions of Warranties

Mule-Hide's obligations under the Roofing Membrane Limited Warranty, the Standard System Warranty, and the Premium System Warranty are limited to the specific terms and conditions of the respective Warranties. Sample copies of the Mule-Hide Warranties are available from Mule-Hide upon request.

PART 2 - PRODUCTS

2.01 General

A. The components of the Mechanically Attached Mule-Hide TPO Membrane Roof System are to be products manufactured or supplied by Mule-Hide Products Co., Inc.

B. Components other than those supplied or manufactured by Mule-Hide may be submitted for review and acceptance by Mule-Hide's Warranty Department. Mule-Hide's acceptance of any other product is based solely on chemical compatibility and published performance data provided by the component manufacturer. Other components may be considered on a job-by-job basis and must be approved in writing by Mule-Hide's Warranty Department. Mule-Hide offers no warranty or guarantee for the performance or suitability of any component not supplied or manufactured by Mule-Hide.

2.02 Roofing Membrane

The Mule-Hide Reinforced TPO-c Membrane is available in 45 mils (.045 inch), 60 mils (.060 inch), or 80 mils (.080 inch) thick. The Mule-Hide TPO-c membrane is a polyester scrim reinforced thermoplastic polyolefin roofing membrane that meets and exceeds the requirements of ASTM D6878 Standard Specification for Thermoplastic Polyolefin Based Sheet Roofing. Refer to the Product Data Sheets for physical properties and additional information.

2.03 Accessory Materials

The following Mule-Hide materials must be used to install Mule-Hide Roof Systems. Mule-Hide will not warrant any application where another manufacturer's product is substituted for a Mule-Hide product. **All products listed below are physically and chemically compatible with each other.**

A. Mule-Hide TPO Bonding Adhesive - A solvent-based rubberized adhesive used for bonding Mule-Hide TPO-c Membrane to various vertical substrates and insulation boards. Mule-Hide TPO Bonding Adhesive is a two-surface contact adhesive that is applied to both the underside of the membrane and substrate surface. This product may be used with TPO field membrane and flashing membrane. Adhesive is compatible with polyisocyanurate, wood fiberboard insulations, fiberglass-faced gypsum panels, concrete, masonry, metal and wood surfaces.

B. Mule-Hide Low VOC Bonding Adhesive - A high strength solvent-based contact adhesive

that allows bonding of TPO membrane to various porous and non-porous substrates. It is specially formulated using a blend of VOC exempt and non-exempt solvents to meet the < 250 g/l VOC content requirements of the OTC Model Rule for Single Ply Roofing Adhesives.

C. Mule-Hide Low VOC Bonding Adhesive - 1168 – A high strength solvent-based contact adhesive that allows bonding of TPO membrane to various porous and non-porous substrates. It is specially formulated using a blend of VOC exempt and non-exempt solvents to meet the < 250 g/l VOC content requirements of the OTC Model Rule for Single Ply Roofing Adhesives. **This product COMPLIES with the following California counties' VOC regulations:** Alameda, Contra Costa, El Dorado, Los Angeles, Marin, Napa, Orange, Riverside, Sacramento, San Bernardino, San Diego, San Francisco, San Mateo, Santa Clara, Solano, Sonoma, and Tehama.

D. Mule-Hide WBBA-2000 – A water base adhesive used to bond Mule-Hide TPO-c membrane to various vertical substrates and insulation boards. WBBA-2000 is applied as a two-sided contact adhesive when used with standard (non-fleece back) TPO membranes, or as a single-side, wet lay-in adhesive when used with Mule-Hide Fleece Back TPO membrane.

E. Mule-Hide TPO Primer - A high-solids-content, clear (translucent color), polymer-based splice primer used to prepare TPO membrane for improved adhesion to pressure-sensitive TPO accessories such as: RUSS Strips, TPO Pressure Sensitive Cover Strips, Uncured Flashing Tapes and Cured Cover Tapes. Mule-Hide TPO Primer is required to prepare TPO membrane surfaces prior to the application of any pressure sensitive Mule-Hide accessories.

F. Mule-Hide Low VOC Primer - a solvent-based product designed to prepare TPO membrane for improved adhesion to pressure-sensitive TPO accessories such as: RUSS Strips, TPO Pressure Sensitive Cover Strips, Uncured Flashing Tapes and Cured Cover Tapes. This Low-VOC product is ideal for use in states where VOC content is a concern.

G. Mule-Hide TPO Flashing - a non-reinforced, .060-inch thick material primarily used to seal details where field fabrication is necessary, such as drain details, pipe flashings, pitch pocket flashings, seaming joints of the Mule-Hide TPO Coated Metal, and any place where reinforced membrane is not practical.

H. Mule-Hide TPO Universal Corners - .060-inch thick pre-molded, non-reinforced TPO material. They are uniform in shape and size and provide water tightness at corners formed by TPO coated metal and flashing membrane. They provide a neat, finished look to building corners, curbs and parapet flashings with no cutting or stretching required. Universal Corners are available in white only.

I. Mule-Hide TPO Outside Corners – are pre-molded and are used for flashing outside corners on a variety of details. Installation is fast and easy with no cutting or stretching required. TPO Outside Corners are available in white, gray, and tan.

J. Mule-Hide TPO Inside Corners – are pre-molded and are used for flashing inside corners on a variety of details. Installation is fast and easy with no cutting or stretching required. TPO Inside Corners are available in white, gray, and tan.

K. Mule-Hide Weathered Membrane Cleaner - Used to clean in-service TPO-c membrane prior to the welding process. This cleaner helps to loosen and remove dirt and other contaminants from the surface of the TPO-c membranes and leaves a suitable surface for welding or the subsequent application of TPO Primer.

L. Mule-Hide TPO Pipe Seal - An injection molded, pre-formed flashing for pipes made of Mule-Hide non-reinforced TPO material. They are designed to add ease to the installation process while offering increased watertight security and improved aesthetics. TPO Pipe Seals are designed as an economical flashing for single pipe penetrations on Mule-Hide

TPO-c Membrane roof systems. The TPO Pipe Seals can be used wherever the TPO Pipe Seals may be slipped over the top of the pipe.

M. Mule-Hide TPO T-Joint Cover - 60-mil non-reinforced flashing cut into a 4.5” diameter circle used to seal step-offs at splice intersections. Installation is mandatory on all 60-mil and 80-mil TPO systems and on all jobs warranted longer than 15 years.

N. Mule-Hide TPO Coated Metal – 24-gauge, galvanized steel to which is laminated 35 mils (.035" thick) of Mule-Hide non-reinforced TPO Membrane used for flashing and edge metal detailing.

O. Mule-Hide All-Purpose Bar ("A-P Bar") - an extruded aluminum bar, 50 mils (.050") thick, used to terminate adhered reinforced membrane vertical flashings in certain constructions. Mule-Hide A-P Bar may also be used to anchor the field sheet at the base of vertical angle changes.

P. Membrane Fasteners and Discs - Mule-Hide offers a variety of membrane fasteners and discs to meet specific job conditions and substrates.

Q. Mule-Hide Thermoplastic Pourable Sealant - a one-component thermoplastic sealant for use in pitch pockets.

R. Mule-Hide TPO .045 Reinforced 6” X 100’ – used for stripping-in TPO Coated Metal and as cover strips over TPO Coated Metal joints.

S. Mule-Hide TPO Cut Edge Sealant – A solvent-based liquid sealant used to seal the cut edge of the Mule-Hide TPO Membrane.

T. Mule-Hide TPO Walkway Rolls – a 1/8-inch thick embossed TPO membrane available in rolls (34" x 50’) having a herringbone traction surface. Walkway Rolls are trimmed in safety yellow along the length of the sheet to better define the walkway area. Walkway Rolls may be welded directly to the TPO roofing membrane. The yellow edges are smooth without safety lugs to allow for easier welding. Walkway Rolls are available in White and Gray colors.

U. Mule-Hide Insulation - Mule-Hide Poly ISO polyisocyanurate insulation (flat or tapered) is a closed-cell polyisocyanurate foam core laminated to heavy, black (non-asphaltic) glass fiber reinforced felt facers.

V. Mule-Hide HP Protective Mat - A nominal 6.0-ounce per square yard (140 grams per square meter) UV resistant polypropylene needle punched fabric. It can be used above the membrane as a slipsheet for protection from damage by materials placed on top of the membrane or below the membrane as a slipsheet over smooth surfaced BUR or Modified Bitumen roofing systems when recovering with a Mule-Hide Mechanically Attached TPO Roofing System.

2.04 Related Materials By Others

A. Wood Nailers

1. Nailers shall be #2 or better lumber. Creosote and asphaltic preservatives are not acceptable. Pressure treated lumber is not required on new construction unless specified by the architect.

2. Wood nailers shall conform to Factory Mutual's Loss Prevention Data Sheet 1-49.

3. Wood nailers shall be installed as specified on the project drawings and shall be of a height sufficient to match the thickness of the insulation being used.

B. Vapor Retarders

1. Vapor retarders shall meet specified codes and insurance requirements.

2. Vapor retarders shall be compatible with insulation and other accessories.

3. The use and placement of a vapor retarder should be determined by an architect or engineer. Mule-Hide does not require the use of vapor retarders. However, Mule-Hide recommends that a vapor retarder be considered when both of two conditions are anticipated:

   a. The outside average January temperature is below 40°F, and

   b. The expected interior winter relative humidity is 45% or greater.

4. Mule-Hide must be contacted for buildings that are refrigerated (freezers or cold storage) or have a high interior humidity such as, but not limited to, swimming pools, produce storage or locker rooms.

C. Insulation

1. Insulation shall be installed as a protection layer over the existing substrate or to obtain a desired thermal value.

2. Insulation shall be compatible with the Mule-Hide TPO Membranes, Mule-Hide Adhesives, Mule-Hide TPO Flashings and other Mule-Hide Accessories.

3. The following insulation boards are acceptable for use with a mechanically attached roofing system when a standard warranty is requested:

   a. Polyisocyanurate insulations having non-asphaltic facers (foil facers are not acceptable) meeting the physical property requirements of Fed. Spec HH-I-1972 and having a minimum compressive resistance of 18 psi. Thickness minimum is 1.0" or greater as required by insulation manufacturer to span steel deck flutes.

   b. High Density Wood Fiberboard - may be used as an overlay over other insulations. 1/2-inch thick is the minimum requirement when used as an overlay. Mule-Hide requires a minimum 1-inch thick board when installing directly over steel decks. Wood and concrete decks require a minimum 1/2-inch thick board. Minimum thicknesses and attachment rates will vary with wind requirements and deck types.

   c. Expanded Polystyrene. Density of boards must be 1.0 PCF certified minimum and meeting ASTM C578, Type II physical properties. Minimum thickness shall be 1.0 inch. When installing directly over a steel deck the minimum thickness shall be as required by insulation manufacturer to span flutes. Check local building codes as a layer of gypsum board may be required under the EPS insulation (on steel decks) or on top for fire ratings.

   d. Extruded polystyrene meeting ASTM C578, Types IV, VI or VII physical properties. Minimum thickness shall be as required by insulation manufacturer to span steel deck flutes. Check local building codes as a layer of gypsum board may be required under the extruded insulation (on steel decks) or on top for fire ratings.

   e. Perlite Insulation – Perlite is not an acceptable insulation. Perlite may only be used as a fill insulation under an approved insulation. The TPO membrane cannot be adhered directly to perlite insulation.

   f. Dens Deck, Dens Deck Prim, or Securock - A minimum 1/4" thick layer of

Dens Deck, Dens Deck Prime or Securock may be used as an overlay over an approved insulation.

g. State and local building codes should be reviewed regarding the installation of expanded or extruded polystyrene insulation directly over a steel deck.

4. Insulation manufacturer shall provide its recommendations for use and attachment to the owner with a copy sent to Mule-Hide's Warranty Department. In addition, the insulation manufacturer shall provide a copy of their specific warranty conditions.

5. Mule-Hide Premium Warranties require the use of the Mule-Hide labeled insulation or insulation by an approved Mule-Hide manufacturer. Use of other insulations may disqualify the project for consideration of the issuance of a Premium warranty. Contact the Mule-Hide Technical Service Department for specific requirements.

D. UL and FM Approved Assemblies

Contact Mule-Hide Technical Department for proper insulated assemblies when projects require compliance with UL or FM requirements. The components may change with the slope, deck type and classification requested.

E. Sheet Metal

1. Metal flashing products supplied by Mule-Hide (Mule-Hide Metal Accessories) and installed by a Mule-Hide Warranty Eligible Applicator will be covered under a Standard or Premium System warranty.

2. TPO Coated Metal and non-coated metal components such as gravel stops, drip aprons, counterflashings, copings, etc., should be fabricated and installed in accordance ES-1 recommendations and requirements.

3. Sheet metal components supplied by others are not covered by the Mule-Hide warranties. Contact Mule-Hide's Technical Department for specific requirements.

F. Insulation Adhesive

1. Insta-Stik™ - A single component polyurethane, construction grade, low-rise expanding foam adhesive used for attaching approved insulations to concrete, cellular lightweight insulating concrete, gypsum or cementitious wood fiber decks.

2. Weather-Tite One Step® – A **two component**, one-step, all-purpose foamable adhesive that will lock insulation boards into place within 5 – 10 minutes of application in all temperatures.

2.05 Precautions

A. Consult Material Safety Data Sheets and container labels for specific safety instructions prior to use.

B. Avoid breathing vapors of solvents, cleaners, primers, sealants and adhesives. Use with adequate ventilation. Avoid prolonged contact of solvents, sealants, cleaners, primers and adhesives with skin. Solvent resistant rubber gloves should always be worn during use.

C. Do not use Mule-Hide TPO roofing products near fire or flame. Do not use open flames for drying of surfaces, sealants or adhesives. **Do not smoke near flammable products.**

D. Do not use oil-based paint on Mule-Hide TPO Coated Metal or membrane. Contact

Mule-Hide's Technical Department for recommendations.

E. Do not allow muriatic acid (masonry cleaner) to come in direct contact with the Mule-Hide TPO Membrane or accessory products.

F. Do not allow Mule-Hide TPO membranes or accessories to come into direct contact with steam or vents that produce temperatures in excess of 160°F (71°C).

G. The Mule-Hide TPO Roof System may be installed in cold weather provided the adhesives are stored at room temperature until just prior to use and used within 2 hours. Adhesives left in the cold must be returned to room temperature prior to use.

H. Cover Tapes may lose tack when exposed to temperatures below 40° F. for extended periods of time. A heat gun may be used to warm the product. Only apply heat to the TPO side. Be careful not to overheat. Hot boxes are the preferred method to warm tapes.

I. In colder temperatures when the ambient temperature is near the dew point, condensation may form on the tape primer and adhesive as the solvents flash off. If condensation occurs, discontinue the application and allow the surface to dry. **Do not attempt to dry the surface with heat guns or torches.** When weather permits apply a new coat of product.

Part 3 - EXECUTION

3.01 General

A. When installing a Mechanically Attached Mule-Hide Reinforced TPO Membrane Roofing System in cooler weather, it is recommended that liquids such as solvents, sealants, etc., be stored at warmer temperatures (60°F or more but not exceeding 80°F) until just prior to use in order to facilitate the installation.

3.02 Substrate Conditions

The following general conditions apply to the substrate that will receive a Mechanically Attached Mule-Hide TPO Membrane Roofing System for both new construction and reroof applications:

A. The roof deck must be structurally sound to provide proper securement for mechanical fasteners. Areas showing a loss of integrity due to corrosion, rotting, warping, concrete spalling, etc., must be repaired or replaced prior to installing the roofing system.

B. It is the responsibility of the roofing contractor to perform test cuts at each roof area prior to reroofing. The condition of the substrate must be suitable to receive a Mechanically Attached Mule-Hide TPO Roofing System. Wet insulation must be removed and replaced. See Single Ply Roofing Institute's guidelines for determining wet insulation.

C. Contact the material manufacturer when the substrate is exposed to excessively high humidity and/or a corrosive environment. Special fasteners (i.e.- stainless steel) or details may be required.

D. A determination must be made regarding the presence or absence of coal tar pitch within the existing roof assembly when considering a recover of the old roof system. The presence of coal tar pitch requires the use of a 6-mil poly slipsheet under the insulation unless the coal tar pitch is 10 years or older and is separated from the Mule-Hide TPO membrane by a layer of insulation a minimum of 1-1/2" thick having a minimum "R" value of 5.0. All joints must be butted tightly together or have joints completely taped to prevent volatiles from damaging roof membrane.

E. It is acceptable to install a Mechanically Attached Mule-Hide TPO Membrane Roofing System over the following deck substrates in new construction, provided that an acceptable insulation is installed over the substrate as needed:

1. Structural Metal Deck (22 gauge minimum) shall conform to recommendations outlined in Factory Mutual's Loss Prevention Data Sheet 1-28 (requires insulation). Contact Mule-Hide's Warranty Department for attachment requirements for decks less than 22-gauge in thickness. All FM testing is based on attachment to a 22-gauge steel deck.

2. Structural concrete and pre-cast, pre-stressed concrete (2,500 psi. minimum) shall be cured and dry to industry standards and surface shall be smooth and free of moisture or frost. All sharp ridges or other projections above the surface shall be removed before roofing. An approved insulation board is recommended. Minimum deck thickness shall be 2 inches with 3 inches preferred due to possible spalling damage that may occur to the underside of the deck when using fasteners for insulation and membrane attachment. Insulation may be attached with Type III or IV hot asphalt, approved adhesive or approved fasteners.

3. Lightweight Insulating Concrete Fill and Metal Form work (minimum 24 gauge metal form work) - the roof deck shall be cured and dry to the deck manufacturer's and/or industry standards and shall be smooth and free of ridges and depressions. All necessary venting as recommended by the roof deck manufacturer shall be accomplished. These decks may be acceptable to receive a Mechanically Attached Mule-Hide TPO Membrane Roofing System after pullout tests have been completed and appropriate fasteners have been selected. Attachment must be through the insulating concrete into the steel or concrete deck. Insulation board is required. Vapor barriers may be required when installing insulation over new decks.

4. Wood Plank (1" minimum) shall conform to Factory Mutual's requirements for Class 1 impregnated decks (insulation is required). FM approved wood decks are a minimum, nominal 2-inch thick, tongue and groove planks.

5. Plywood (15/32" minimum) shall be exterior grade (minimum CDX grade). A layer of an approved insulation is required for reroof applications. On new construction, while insulation board is recommended, fastening directly to the plywood deck is acceptable if the decking is secured with screws or back-out resistant fasteners. Decks attached with common or cement coated nails or staples shall be covered with an approved insulation.

   Mechanically attached systems are not allowed over Oriented Strand Board (OSB) decks without prior approval by the Mule-Hide Technical Department. Mule-Hide will not issue system warranties on “As-Built” projects where Mule-Hide did not grant approval prior to the start of the work

6. Cementitious Wood Fiber Decks - Certain cementitious wood fiber decks may be acceptable to receive a Mechanically Attached Mule-Hide TPO Membrane Roofing System after pullout tests have been completed and appropriate fasteners have been selected. This deck type requires an acceptable insulation.

7. Gypsum Concrete Deck - shall be cured and dry to manufacturers' and/or industry standards. The surface of the deck shall be smooth and free from ridges and depressions. Certain gypsum concrete decks may be acceptable to receive a Mechanically Attached Mule-Hide TPO Membrane Roofing System after pullout tests have been completed and appropriate fasteners have been selected. This deck type requires an acceptable insulation.

F. For reroofing projects having plywood decks, a minimum of one layer of an approved insulation is required after the tear-off has been completed.

G. Mule-Hide recommends that all roof surfaces have a positive slope to provide adequate drainage. There should not be any ponding water 48 hours after a rainfall.

3.03 Preparation of Existing Substrate

A. General

1. To prevent delays or interruptions, coordinate work with other trades or suppliers to ensure that components to be incorporated into the Mechanically Attached Mule-Hide TPO Membrane Roofing System are available as the work progresses. Examine substrates to which the roofing materials are to be applied to ensure that their condition is satisfactory for the Mule-Hide TPO Membrane Roofing System application.

2. Do not permit voids greater than 1/4" wide in the substrate. Concrete substrates shall be cured and free of laitance and curing compounds. Substrates for roofing materials shall be dry and free of oil, dirt, grease, sharp edges and debris. Inspect substrates and correct defects before application of roofing membrane.

3. Specifier or roofing contractor shall determine the condition of the existing roof deck and roofing system. Areas with deteriorated decking, wet insulation or other failed materials shall have those affected materials removed and replaced. Make sure all decking is securely fastened. The roofing contractor has the final responsibility to ensure an acceptable deck is provided to receive the new roof system.

4. Large blisters shall be cut and patched to provide a reasonably level substrate surface.

5. On recover projects, tear off all existing base flashings, cant strips and projection flashings down to the substrate. The flashing substrate shall be dry and free of oil, dirt, grease, sharp edges and debris.

6. Gravel over existing nailers must be totally removed prior to installing new nailers and flashings. Verify that the existing nailers are in good condition and securely anchored to the roof decks.

7. When an additional thickness of insulation is being added, new nailers must be added to match the height of the new insulation. Nailers must be securely anchored to the roof deck per Section 3.05 of this specification.

8. All roof surfaces shall be free of ponded water, ice, or snow. Significant ponding that remains after a period of 48 hours should be eliminated by either installing tapered insulation to create positive drainage of the roof surface or by installing new drains in the low areas where the ponding remains. Positive drainage shall also eliminate the possibility of excessive live loads caused by ponding water that could cause structural damage or failure.

9. When removing an existing roof during reroofing, remove only that amount of roofing and flashing that can be made watertight with new Mule-Hide TPO materials in a one-day period or prior to the onset of inclement weather.

10. Recovering over a gravel surfaced BUR systems require the installation of an acceptable insulation. Loose gravel must be removed. All lead pipe and drain flashings shall be removed.

11. Smooth Surfaced BUR and smooth Modified Bitumen roofing systems shall require the installation of an acceptable insulation or slipsheet. All lead pipe and drain flashings shall be removed. Single-ply membranes such as EPDM, Hypalon, PVC or CPA must have all existing flashings removed, the field sheet must be cut up into sections no larger than 10' by 10' and an acceptable layer of insulation shall be installed over the existing field membrane.

12. Polyurethane Foam roofing systems ("PUF") are not acceptable for recover applications. The PUF system must be completely removed and new insulation installed prior to the installation of the new TPO Roofing System.

13. If a Mule-Hide Premium warranty is requested, the existing roof system **must be removed to the deck** prior to the installation of the new roofing system or a moisture survey by an independent third party must be taken, all wet areas removed and a copy of the survey submitted to Mule-Hide with the warranty application.

3.04 Vapor Retarder Installation (where specified)

A. Specific climatic and job conditions may require the use of a vapor retarder. It is the sole responsibility of the design professional to determine the need for a vapor retarder, and its type and location in the roofing system. A vapor retarder may often act as an "air barrier" which may have a positive effect in reducing internal air pressure. Vapor retarders should be strongly considered for buildings subject to high internal air pressures such as airplane hangars and buildings with many loading bays such as warehouse facilities.

B. The National Roofing Contractor's Association recommends the installation of vapor retarders when interior relative humidity is 45% or greater and the outside mean average January temperature is below 40°F.

C. Install a vapor retarder over a suitable substrate with all side and end laps and all penetrations sealed in accordance with the manufacturer's instructions. The vapor retarder may be loosely laid or adhered with the manufacturer's recommended adhesive. In reroofing where the existing built-up roof is to remain, the built-up roof may be an adequate vapor retarder as long as all splits or tears are repaired in order to provide a total barrier to vapor penetration.

3.05 Wood Nailers

A. Wood nailers are required at all roof perimeter edges where metal edging and gutter systems are specified or where indicated in Mule-Hide's published Standard TPO Details.

B. Nailers shall be firmly anchored to the decks at a maximum 2'-0" o.c. and shall resist a pullout force of 200 lbs./linear foot in any direction. A 1/2" vent space shall be provided between adjacent lengths of nailers. Fasteners shall be installed within 6 inches of each end. Spacing and fastener embedment shall conform to Factory Mutual Loss Prevention Data Sheet 1-49.

C. Height of nailers shall match the surface level of the insulation and roof membrane. The width of the wood nailer shall extend beyond the metal flange to prevent damage to the membrane.

D. All woodwork to be reused shall resist a minimum force of 200 lbs/linear foot in any direction and shall be free of rot.

E. Wood nailers with creosote and asphaltic preservatives are not acceptable. Pressure treated lumber is not required on new construction unless specified by the architect.

3.06 Insulation Installation

A. Mule-Hide accepted roof insulations shall be installed in accordance with Mule-Hide specifications.

B. Mule-Hide accepted roof insulations shall be secured to the roof deck in accordance with Mule-Hide's requirements utilizing Mule-Hide fasteners or approved compatible fasteners. An approved low-rise foam adhesive for each layer may be substituted for mechanically fastening through the top layer.

C. All roof insulation shall be neatly cut to fit around all penetrations and projections with a maximum allowable gap of 1/4-inch.

D. Open joints shall be repaired with like insulation material.

E. Insulation shall be feathered or tapered to provide a minimum sump area of 36" x 36" where possible at all drains. Crickets and saddles may be installed beneath the specified insulation where possible. Crickets and saddles made from non-compatible insulations materials must be overlaid with an acceptable insulation or underlayment.

F. Install no more roof insulation in one day than can be covered with the Mule-Hide TPO Membrane or when the onset of inclement weather is anticipated.

G. Insulation installed over steel decks shall be checked so that no edges are left unsupported along the flutes. All insulations shall be of sufficient thickness and density to prevent breakage under normal roof construction traffic.

H. When installing insulation, the end joints of each row of insulation shall be offset against the previous row. When more than one layer of insulation is to be used, succeeding layers are to be laid staggered in relation to the previous layer of insulation and all joints shall be offset.

I. When a Mule-Hide Premium Warranty is requested, only Mule-Hide labeled insulation may be used unless written approval is obtained, prior to job bid, for an alternative insulation.

J. Insulation other than Mule-Hide labeled insulation must be an FM approved insulation and acceptable to Mule-Hide for use under the Mule-Hide Mechanically Attached Roofing System. Refer to the insulation manufacturers guidelines for the appropriate type, size and thickness of the insulation needed for use over the respective substrate and under the Mule-Hide Mechanically Attached Roofing System.

K. Mule-Hide's minimum attachment rates shall be as follows:

2' by 4' boards shall be 2 per board
4' by 4' boards shall be 4 per board
4' by 8' boards shall be 6 per board (for boards up to 2" thick)
4' by 8' boards shall be 5 per board (for boards 2” thick or greater)

Contact Mule-Hide’s Technical Department for FM approvals and required attachment rates that are determined by deck type, insulation brand, type and thickness. When using multiple layers of insulation or more than one type of insulation, the number of fasteners required per board is determined by the top layer of insulation.

L. If a slipsheet is to be installed, the roof membrane shall be installed immediately after the slipsheet to prevent any displacement. The slipsheet should be overlapped a minimum of 4 inches on each edge. Plates and fasteners may be necessary to anchor the slipsheet when installing in windy conditions. Sufficient fasteners should be used to ensure the slipsheets lay flat under the roof membrane.

3.07 Membrane Installation

A. General - Unroll the Mule-Hide TPO Membrane and position without stretching. Allow the membrane to relax at least 15 minutes when the temperature is above 60°F, or 30 minutes when the temperature is below 60°F, prior to installation. Inspect and remove any damaged membrane.

B. **Membrane must run perpendicular to the direction of steel deck flutes** and orientation of wood decks where possible.

C. All membrane overlaps shall be installed to facilitate the flow of water. Seams shall be shingled or run parallel to the flow of water. Backwater seams are not permitted.

D. Lap sheets a minimum of 5-1/2 inches for In-Lap Fastening, leaving space for a continuous, minimum 2" weld beyond the outside edge of the fasteners and discs. Membrane overlaps shall be shingled with the flow of water or parallel to the flow of water. End laps shall be overlapped a minimum of 3 inches.

E. The roofing contractor shall check all welded seams for continuity and integrity using a cotter pin puller or other suitable blunt object. The contractor shall make sample test seams each day prior to welding field seams. The contractor shall, using scrap material, run at least two test seams, each a minimum of 2' long. Each test seam shall be used to determine adequate seam strength and to ensure the equipment has warmed up, is operating properly and proper settings have been determined. This should be done each time the equipment is turned on after a cool down period.

3.08 Sheet Attachment

A. Perimeter Enhancements

1. When installing the Mechanically Attached Mule-Hide TPO Roofing system, fastening enhancements must be installed at the perimeters and completed with Mule-Hide approved fastening systems at the predetermined spacing. The Perimeter Enhancements are dependent on building height, wind zone location, and warranty duration. See Technical Bulletin TPO-MA02-2006 for required enhancements.

   Perimeter areas shall be determined by one of the following methods:

   a. Mule-Hide Technical Bulletin TPO-MA-02-2006

   b. For Factory Mutual insured buildings, follow guidelines in FM's Loss Prevention Data Sheet 1-29. Perimeter area for all exterior roof edges/parapet walls is calculated by taking 40% of the roof height or 10% of the lesser plan dimension, whichever is less. The calculated distance is the area into the field of the roof, from the exterior edge/wall, which shall be included in the enhanced fastening area, rounding off to the next full enhancement dimension as needed. Contact Mule-Hide Warranty Department for fastener spacing for compliance with FM 1-60 and 1-90 requirements.

   c. Parapet walls of a height of 8 feet or greater do not require Perimeter Enhancements.

   d. Parapets, walls and expansion joints separating adjoining roofs of the same elevation or roofs that are at a higher elevation than the roof being installed are considered interior walls and do not require Perimeter Enhancements. Sheet Mule-Hide Details # MHT-UN-108A and MHT-UN-108B

   e. Roof edges and parapet walls separating other roofs areas that are at a lower elevation than the roof being installed are considered exterior edges/parapets when the difference in elevation is three feet or more and shall require the installation of Perimeter Enhancements. Sheet Mule-Hide Details # MHT-UN-108A and MHT-UN-108B

   f. For roofs of heights of 70 feet or greater and located in wind zones higher than 80 mph or for projects requesting enhanced wind speed warranties, Mule-Hide requires that FM guidelines be followed when determining the extent of the perimeter enhancements.

2. Methods for Perimeter Enhancements

Perimeter Enhancements can be formed by using individual 4’ or 6’ wide sheets, by subdividing 8’, 10’, or 12’ wide field sheets using 10” wide Pressure-Sensitive RUSS strip, or by installing rows of seam fastening plates through the top of the membrane and patching with appropriate materials.

a. Individual Perimeter Sheets Method

1. Position membrane along the perimeter of the roof over the acceptable insulation/underlayment.

a. 4’ perimeter sheets are used with 8’ field sheets

b. 6’ perimeter sheets are used with 10’ and 12’ field shets

2. Over steel roof decks

a. All seams must run perpendicular to the ribs of the deck. This requirement will necessitate that perimeter sheets on two sides of the roof (where the seams would be running parallel with the flutes of the deck) be turned so that the seams in the perimeter sheets run perpendicular to the deck flutes. See Detail MHT-FM-308B.

b. In lieu of changing the orientation of the perimeter half sheets where the seams would normally run parallel to the deck flutes, the contractor can elect to install fastener row “fingers” as depicted in Detail MHT-FM-308A.

b. 10” RUSS Method

1. When **field sheets are positioned parallel to a roof perimeter, 10" wide Sure-Weld Pressure-Sensitive RUSS** (with 3” wide tape each side) shall be placed approximately down the center of the 8‘, 10', or 12' wide TPO field membrane sheets. When a 10” RUSS divides a field sheet in half, two perimeter sheets are created.

2. Unroll and position the 10" wide TPO Pressure-Sensitive RUSS over the insulation substrate where membrane securement is desired. Locate the RUSS with the fastener markings and tape facing upwards.

3. Position Mule-Hide Seam Plates at the same spacing as the field sheets and secure with an appropriate fastener. Do not fasten plates over top of the release liner as this will cause the liner to tear when removed.

4. Remove any dirt or dust resulting from plate installation. Any residual dust/dirt will be detrimental to the bond strength of the tape adhesive.

5. Position the TPO membrane and **thoroughly clean the underside of the TPO membrane using Weathered Membrane Cleaner if necessary.** (The entire membrane surface where the tape is to contact must be clean. The adhesive on the TPO Pressure Sensitive RUSS will not adhere to dusted / dirty surfaces).

6. Using a Scotch Brite© Pad, apply TPO Primer to the underside of the TPO membrane in a circular motion in the area that will come in contact with the two strips of 3” wide tape. The properly primed area will be uniform in color without streaks and free from globs or puddles.

7. Remove the release liner from the tape on the TPO Pressure-Sensitive RUSS pulling it parallel to the roof deck.

8. Once the TPO Primer has dried to the touch but is still tacky, roll the deck membrane onto the exposed tape and apply hand pressure to the seam area.

9. Roll the entire 10" width of the TPO Pressure-Sensitive RUSS seam area with a 2" wide roller using positive pressure.

10. To achieve proper adhesion of the TPO Pressure-Sensitive RUSS when job site temperatures fall below 40°F (5°C), heat the cleaned / primed area of the TPO membrane with a hot air gun as it is applied and pressed into the tape.

11. Over steel roof decks

    a. When field membrane sheets **extend perpendicular to the edge of the roof**, position the **10" RUSS** beneath the membrane along the center of each field sheet extending a distance equal to 0.4 times the building height to create perimeter enhancements.

    CAUTION: 6" wide RUSS is only available with 3” wide tape on one side and therefore cannot be used to form perimeter sheets.

c. Fastening Plates Method

1. In lieu of the RUSS securement method prior to the installation of the field membrane, position a row of seam fastening plates down the center of the 8’, 10’, or 12’ wide field sheets after it has been placed in position. Secure plates with appropriate fastener and overlay plates with 6” wide Pressure-Sensitive TPO Cover Strip or 6” Reinforced TPO Cover Strip hot air welded to the field membrane.

2. On projects requesting warranties of 20 years or more, the plates and fasteners must be overlaid with 6” Reinforced TPO Cover Strip and hot air welded to the field membrane. Cut Edge Sealant must be applied to all cut edges of the Reinforced TPO Cover Strip.

3. Over steel roof decks

    a. When field membrane sheets **extend perpendicular to the edge of the roof**, position the plates and fasteners on top of the membrane along the center of each field sheet extending a distance equal to 0.4 times the building height to create perimeter enhancements.

d. Building with Special Conditions:

Air pressurized buildings, canopies and buildings with large openings where the total wall openings exceed 10% of the total wall area on which

the openings are located (such as airport hangars, warehouses and large maintenance facilities) will typically require additional perimeter enhancement.

1. **Buildings with large openings (Figure 1)** - When any wall contains major openings with a combined area which exceeds 10% of the total wall area on which the openings are located, a minimum of four (4) perimeter sheets (centered over the opening) must be specified as shown. As an option to the above perimeter securement, an adhered membrane section may be used in lieu of the mechanically fastened membrane at large openings in accordance with the Mule-Hide Fully Adhered TPO Roof System Specification.

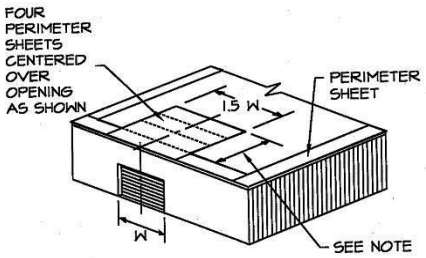

Figure 1

NOTE: Depth of perimeter area shall not be less than 2.5 times the width of the opening. See Detail MHT-MA-103A.

2. **Buildings with overhangs (Figure 2)** – The membrane must be specified with perimeter sheets installed over the entire overhang area extending onto the main roof deck when at the same level. As an option, an adhered membrane section may be used in lieu of the mechanically fastened membrane at building overhangs in accordance with the Mule-Hide Fully Adhered TPO Roof System Specification. See Detail MHT-MA-103B.

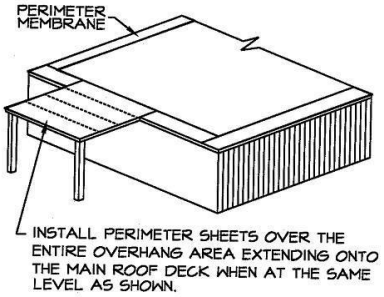

Figure 2

B. Field Areas

a. **Membrane should run perpendicular to the direction of steel deck flutes** and orientation of wood decks where possible.

b. All membrane overlaps shall be installed to facilitate the flow of water. Seams shall be shingled or run parallel to the flow of water. Backwater seams are not permitted.

c. All membrane sheets are to be overlapped a minimum of 5-1/2" to provide space for fastener and disc placement and for a continuous, minimum 2" wide weld.

d. Do not run any seams through field drains or sumps. Any seams running through drains shall be cut out and target patches (36” x 36”) shall be installed.

3.09 Welding of Lap Areas

A. General

1. Roofing membrane is to be hot air welded only. Seaming of "membrane to membrane" and "flashing/detail membrane to membrane" shall be by hot air welding only.

2. All surfaces to be welded shall be clean and dry.

B. Hot Air Welding

1. Machines for hot air welding are available from several different sources. Each manufacturer's instructions for use shall be followed, as well as all local codes regarding electric grounding, supply and other related functions. Since most automatic welding machines require 218 to 230 volts, the use of a portable generator on the roof is recommended for greater flexibility. **Mule-Hide requires the use of automatic welding machines for all field sheet seaming. Hand welding is only acceptable for flashings and those seams where the automatic welder cannot be used.**

2. Hand-held welding equipment is also available to weld membrane. After the preheated nozzle tip is applied in the overlap area and the material starts to soften, immediately follow with a silicone hand roller to press the heated membrane surfaces together with slow, even movements. Keep the roller within 1 inch of the nozzle tip. Angle the hot air tool so that the flowing air faces the roller. Seam strength may be tested when cool. For best results, testing seams 8 hours after hot air welding is recommended.

C. “T” Joint Covers

1. **For 45-mil membrane and maximum warranty length of 15-years.** Pay special attention to the “T” lap seams formed where the second perpendicular half-sheet overlaps the butt ends of the field sheets. To ensure proper seaming of the “T” joints the top layer of the Heat-Weld Membrane is creased a minimum of one inch into the lower layer of membrane by using a heat gun with a narrow or pencil tip nozzle and a rubber hand roller. By inserting a heat gun nozzle between the layers of the membrane, the membrane will soften and begin to flow allowing it to crease and seal completely after applying pressure with a hand roller to ensure adequate bonding of the softened material. After heat-sealing the “T” joint, Edge Sealant must be applied on all cut edges of reinforced membrane. See detail MHT-UN-105A

2. **For membrane thickness greater than 45-mil or warranty length greater than 15-years.** Separate “T” joint patches are required over all “T” joints. See detail MHT-UN-105B

D. Seam Patches at Roof/Wall Transitions

1. Mule-Hide requires the installation of Non-Reinforced TPO Flashing Membrane patches over any seam that transitions from the horizontal to the vertical. These patches are to be constructed with Non-Reinforced TPO Flashing Membrane only and hot air welded. Refer to Mule-Hide Detail MHT-UN-105C.

E. Daily Welding Equipment Setup

1. The roofing contractor shall make sample test seams each day prior to welding field seams. The contractor shall, using scrap material, run at least two test seams, each a minimum of 2 feet long. Each test seam shall be used to determine adequate seam strength and to ensure the equipment has warmed up, is operating properly and proper settings have been determined. This should be done each time the equipment is turned on after a cool down period.

F. Quality Control of Seams

1. After seaming, the seams are checked for integrity with a probe. Any openings or "fishmouths" are to be repaired with a hand-held hot air tool fitted with a narrow nozzle tip and with a roller. Each day the contractor shall attempt to pull apart several sections of welded seams to test the quality of the welds. Should the welds be deficient, a more thorough examination of the work performed must be carried out and necessary repairs made.

3.10 Additional Membrane Securement (Base Attachment)

A. Additional securement of the TPO membrane by mechanical attachment must be provided at the perimeter of each roof level, base of walls, curbs, skylights, expansion joints, tie-ins, interior walls, bottom of valleys and any angle changes that exceed inclines of 2:12 (2” rise in 12”) and various penetrations as shown in the Mule-Hide Standard Details. All securement must be either horizontally to the roof deck or vertically to the base of the various penetrations as shown in the Mule-Hide Standard Details.

B. The mechanical attachment of the membrane may be achieved by the following methods:

1. 2.4” Seam Plate and appropriate fasteners

   a. The 2.4” Seam Plate and appropriate fasteners are placed with the edge of the Seam Plate approximately ½” away from the angle change. Seam Plates may be placed either horizontally or vertically depending on the conditions encountered. Refer to the Mule-Hide TPO Standard Details for proper placement.

2. Mule-Hide All Purpose Bar

   a. The Mule-Hide All Purpose Bar is a specially extruded aluminum bar that has pre-punched holes 6 inches on center. Bar may be placed either horizontally or vertically depending on the detail followed. Refer to the Mule-Hide TPO Standard Details for the proper placement. Refer to Mule-Hide Detail # MHT-UN-330 for appropriate placement of the All Purpose Bar.

   b. The maximum spacing of the fasteners shall not exceed 12 inches on center. Adjoining bars should be spaced approximately ½ inch to 1 inch apart. All bars must be attached at the ends a maximum of 1 inch from the end of each bar. This may require pre-drilling additional holes. All cut bars shall be deburred.

   c. Under no circumstances shall the All Purpose Bar be stripped-in with TPO PS Cover Strip. TPO .045 Reinforced 6” X 100’ product may be used to strip-in the All Purpose Bar with a continuous, minimum of 1-1/2” (40 mm) wide weld.

   d. The All Purpose Bar must be installed a minimum of 3 inches to a maximum of 6 inches from inside and outside corners.

3. TPO PS RUSS attachment strip

   a. The RUSS is a 6" wide reinforced strip of TPO membrane that may be installed at the base of walls and curbs. Mule-Hide 2.4 inch Seam Plates are used to attach the RUSS horizontally with appropriate fasteners. Refer to Mule-Hide Detail # MHT-UN-305B for appropriate placement of the RUSS, plates and fasteners. The RUSS attachment strip is installed prior to the placement of the field sheet. The RUSS attachment strip is to be placed on horizontal surfaces only and not turned up the vertical.

   b. Follow the standard procedures for cleaning, applying primer and adhering the RUSS and field sheet. Only Mule-Hide TPO Primer or Low

VOC Primer may be used to adhere the RUSS to the field sheet. Bonding Adhesive is **not permitted** for use with the RUSS attachment strips.

c. Spacing of the fasteners shall match the field sheet spacing and shall not exceed 12 inches on center. Adjoining RUSS attachment strips shall be spaced a maximum of 1 inch apart. It is not required to overlap the RUSS.

d. For horizontal attachment, the RUSS attachment strip must be placed a maximum of ½ inch from the base of the angle change extending out onto the horizontal surface (roof substrate). The 2.4 inch Seam Plate must be placed a minimum of ½ inch to a maximum of 1 inch from the exterior edge of the strip. Refer to Mule-Hide Detail # MHT-UN-305B. Installation of the plates must be a minimum of 6 inches to a maximum of 9 inches from the inside and outside corners.

4. Drip Apron and Gravel Stop

a. For drip aprons and gravel stops, the metal flange shall extend a minimum of 3 inches onto the wood nailer. The wood nailer must be wider than the metal flange. Approved screw fasteners shall be installed a maximum of 6 inches on center and ½" to 3/4" from the inside edge of the metal flange. Ring shank nails spaced a maximum of 4" on center may also be used.

b. Drip aprons and gravel stops not made out of TPO Coated Metal shall be primed with Mule-Hide's TPO Primer or Low Voc Primer and stripped with Mule-Hide's TPO PS Cover Strip. Cleaning the metal with a solvent such as toluene or xylene to remove oil film may be required prior to installing and priming with the TPO Primer. Refer to Mule-Hide detail # MHT-UN-106B.

3.11 Flashing Installation

A. TPO Membrane Flashings

1. All membrane flashings are to be installed concurrently with the roof membrane as the project progresses. Temporary flashings are not allowed without prior written approval from the Mule-Hide Warranty Department. Should any water penetrate the new roofing because of incomplete flashings, the affected areas shall be removed and replaced at the contractor's expense.

2. All surfaces to be fully adhered should be compatible, dry and smooth with no excessive surface roughness.

3. On recover projects, all existing base flashings must be removed down to the substrate or covered with new suitable material. If deteriorated areas of substrate are uncovered, repairs must be made to provide a suitable substrate for the new TPO flashings.

B. **TPO Bonding Adhesive, Low VOC Bonding Adhesive, and Low VOC Bonding Adhesive - 1168 (solvent base)**

1. Mix adhesive scraping the sides and bottom of the can (minimum 5 minutes is required) until adhesive is uniform in color. Consult product data sheet for adhesive instructions.

a. Low VOC Bonding Adhesive and Low VOC Bonding Adhesive – 1168 require mechanical stirring (electric drill), both initially and periodically during application.

b. Porous surfaces and substrates may require the application of a prime coat and second coat of Low VOC Bonding Adhesive and Low VOC Bonding Adhesive – 1168 to accomplish proper adhesion.

2. Using a plastic core, medium nap roller, apply a smooth even coat of TPO Bonding Adhesive to back side of membrane and substrate (no globs or puddles). A nine inch roller will easily fit into a 5-gallon adhesive container. **Do not apply adhesive in area of seam laps.**

3. Coverage rate to be approximately:
   120 square feet per gallon for one surface (membrane or substrate only)
   or
   60 square feet per gallon per finished surface (membrane and substrate)

4. Allow adhesive to dry to a 'tacky' state. Test adhesive by placing a knuckle into it and turning your wrist a one-quarter turn. Adhesive is ready to mate when it is tacky but does not string when knuckle is lifted.

5. Care must be taken to ensure proper drying. Avoid thin layers of adhesive which can result in over drying and improper adhesion.

6. Roll coated membrane onto substrate being careful to not wrinkle the sheet or trap air bubbles. Once membrane is mated to the substrate, carefully roll the membrane with a 2-inch wide rubber hand roller to promote maximum positive contact between the membrane and the substrate.

7. TPO Membrane Flashings shall extend a minimum of 6 inches onto the field sheet and be adhered securely. There shall be a minimum of 2 inches between the front of the fastener plates and the edge of the sheet to allow for heat welding. All side laps are to overlap a minimum of 2 inches.

8. **Areas of the flashings and membrane to be welded are not to have TPO Bonding Adhesive applied to them.**

9. Extended drying times can be expected during cool, overcast, humid, shaded, or late day applications. The adhesive must be dry (but still tacky) before mating surfaces to avoid permanent blisters due to trapped solvents.

10. All flashings shall be extended a minimum of 8 inches above roof membrane level and be terminated unless previously accepted by the owner or his representative and the Mule-Hide Technical Department. All flashings shall be hot air welded at their connections with the roofing membrane. Apply Cut Edge Sealant at all welded edges of cut membrane flashings. Refer to Mule-Hide TPO Standard Details for more information.

    NOTE: After flashing is adhered in place, promote full contact adhesion by going back over entire area with a 2-inch rubber hand roller.

C. **WBBA 2000** (Water Base Bonding Adhesive)

1. Mix adhesive scraping the sides and bottom of the can (minimum 5 minutes is required) until adhesive is uniform in color. Consult product data sheet for adhesive instructions.

2. Using a 9" wide, ¼" or 3/8" nap roller, apply a smooth even coat of WBBA-2000 adhesive to back side of membrane and substrate (no globs or puddles). A nine inch roller will easily fit into a 5-gallon adhesive container. **Do not apply adhesive in area of seam laps.**

3. Coverage rate to be approximately:
   120 square feet per gallon for one surface (membrane or substrate only)

or
60 square feet per gallon per finished surface (membrane and substrate)

4. Allow adhesive to dry until it turns translucent and does not transfer to a dry finger or pull away from the substrate. WBBA-2000 adhesive will take a longer time to dry. Adhesive must remain tacky.

5. Mate surfaces together avoiding wrinkles. Immediately roll the bonded area of the sheet with a 2-inch wide rubber hand roller to promote maximum positive contact between the membrane and the substrate. Overlap all adjacent flashing sheets a minimum of 2 inches.

6. **Do not apply adhesive in area to be heat-welded.**

7. Extended drying times can be expected during cool, overcast, humid, shaded, or late day applications. The adhesive must be dry (but still tacky) before mating surfaces to avoid permanent blisters due to trapped moisture.

8. TPO Membrane Flashings shall extend a minimum of 6 inches onto the field sheet and be adhered securely. There shall be a minimum of 2 inches between the front of the fastener plates and the edge of the sheet to allow for heat welding. All side laps are to overlap a minimum of 2 inches.

9. All flashings shall be extended a minimum of 8 inches above roof membrane level and be terminated unless previously accepted by the owner or his representative and the Mule-Hide Technical Department. All flashings shall be hot air welded at their connections with the roofing membrane. Apply Cut Edge Sealant at all welded edges of cut membrane flashings. Refer to Mule-Hide TPO Standard Details for more information.

   NOTE: After flashing is adhered in place, promote full contact adhesion by going back over entire area with a 2-inch rubber hand roller.

10. All flashings shall be hot air welded at their connections with the roofing membrane. All hand welds shall be a minimum of 1-1/2" wide.

11. All flashings shall be properly terminated according to Mule-Hide's published Standard Details.

NOTE: When using Mule-Hide All-Purpose Bar under Counterflashing to terminate wall flashing or when coping is used, TPO Bonding Adhesive, Low VOC Bonding Adhesive, Low VOC Bonding Adhesive – 1168, or WBBA 2000 Bonding Adhesive may be eliminated when flashing height is 12” - 18” or less, depending on the type of termination. Refer to Mule-Hide’s published Standard TPO Details for additional information.

3.12 Drains, Expansion Joints, Pitch Pans

A. Roof Drains

1. Prepare the surface around each drain to prevent any distortion, tenting, or bridging of the membrane. A smooth transition shall be provided from the roof surface to the surface of the drain bowl/clamping ring.

2. All existing roofing materials and metal flashings shall be removed.

3. Mule-Hide requires the application of one full tube of Water Cut-Off Mastic per drain applied to the drain bowl, under the membrane, where the clamping ring will be seated. This will provide a continuous seal between the membrane and the drain bowl.

4. Do not run field seams through drains or sumps. If sheet layout causes a seam

to fall in line with a drain, a target patch (minimum 36” x 36”) shall be required.

B. Expansion Joints

1. Refer to Mule-Hide’s published Standard TPO Details for application methods for flashing expansion joints.

C. Pitch Pans

1. Install and flash pitch pans as indicated in Mule-Hide’s published Standard TPO Details. All pitch pans shall be filled with Thermoplastic Pourable Sealant.

3.13 Walkway Installation

Walkways should be provided in areas where routine rooftop maintenance occurs and in areas where regular rooftop traffic is expected.

A. TPO Walkway Roll Installation

1. Install TPO Walkway Rolls over clean, dry surfaces.

2. Layout areas where TPO Walkway Rolls are to be installed with most of the material being oriented so that it is placed between field seams with each adjacent and abutting section gapped a minimum of 6". Do not install walkway pads over seams.

3. Heat weld the perimeter of the properly positioned TPO Walkway Roll. Check seams for any voids or inconsistencies that might prevent watertightness.

B. Precast Pavers

1. Install precast paver systems acceptable to Mule-Hide over one layer of 6 oz. HP Protection Mat. Contact Mule-Hide for other acceptable slipsheets.

3.14 Temporary Tie-ins

A. Install temporary cutoffs around incomplete edges of roofing assembly at the end of each day's work and when work must be postponed due to inclement weather. Straighten the insulation line using pieces of insulation loosely laid, and seal the Mule-Hide TPO membrane to the deck or existing membrane. Use a heavy application of roof cement at least six inches in width overlaid with an embedded reinforcement on gravel surfaced roofs. Use polyurethane sealant, low rise foam adhesive, or pourable sealer to seal onto single plies, smooth BUR, or modified bitumen roofs. Remove the temporary seals completely when work resumes, cutting out the contaminated membrane. Remove all sealant, contaminated membrane, insulation fillers, etc. from the work area and properly dispose off-site.

End of Section

This specification represents the applicable information available at the time of its publication. Mule-Hide reserves the right to change this information at any time. Contact Mule-Hide or check the Mule-Hide website (www.mulehide.com) for the latest updates regarding changes or modifications to this specification.

MULE-HIDE PRODUCTS CO., INC.
MECHANICALLY ATTACHED TPO SYSTEM
SPECIFICATION ATTACHMENT
RhinoBond ATTACHMENT METHOD

07 54 00/MUL

TABLE OF CONTENTS

PLEASE CONSULT THE MULE-HIDE WEBSITE FOR THE MOST CURRENT INFORMATION AT WWW.MULEHIDE.COM

MULE-HIDE PRODUCTS CO., INC.
MECHANICALLY ATTACHED TPO SYSTEM SPECIFICATION
RhinoBond ATTACHMENT METHOD

Revised Oct 2013
07 54 00/MUL

This is an alternate method for securing the Mule-Hide's TPO-c membrane and is intended to be used in conjunction with the Mule-Hide's Mechanically Attached TPO Roofing System Specification.

1.01 Description

The RhinoBond attachment method incorporates 3" diameter corrosion-resistant plates with a hot melt TPO coating. The RhinoBond plates are installed with Mule-Hide EHD Fasteners to secure an acceptable insulation to minimum 22 gauge steel deck or minimum 15/32" thick plywood.

Mule-Hide's TPO-c Reinforced membrane is positioned over the secured RhinoBond plates and welded to the top surface of the plate with the RhinoBond Induction Welding Tool.

Projects utilizing the RhinoBond Attachment Method will qualify for system warranties up to a maximum 20 year warranty. Contact the Mule-Hide Technical Department for warranty enhancement requirements.

1.02 Products/Heat Welding Equipment

Products listed in "Part II of the Mule-Hide Mechanically Attached TPO System System Specification can be used as part of this alternate securement method in conjunction with the RhinoBond Welding Plates.

A. **RhinoBond TPO Welding Plate**: A 3" diameter, 0.028" thick, corrosion-resistant steel plate with hot melt coating on the top surface. The plate is used in conjunction with Mule-Hide EHD fasteners to attach the roofing assembly and is activated using the RhinoBond Induction Welding Tool.

B. **RhinoBond Induction Welding Tool**: An induction heating tool is used to emit the magnetic field that activates the hot melt coating on the top surface of the RhinoBond plate to fuse with the TPO roofing membrane. Refer to RhinoBond Owner's Manual for additional information.

C. **Cooling Clamp Device**: A stand-up device that allows the weld to cool as it clamps the membrane to the heated plate. Refer to RhinoBond Owner's Manual for additional information.

D. **Heavy Duty Plunger:** Used for testing RhinoBond weld to plates

1.03 RhinoBond Induction Tool Calibration

A. Prior to proceeding with membrane attachment to the plate, the RhinoBond Induction Welding Tool must be calibrated with samples of the project insulation thickness and type and project specified membrane thickness. Refer to RhinoBond Owner's Manual for additional information.

1. Loose lay five RhinoBond Plates in a row about 12-24 inches apart on the specified membrane substrate.

2. Place membrane over the RhinoBond Plates.

3. Center the Induction Welding Tool over the RhinoBond Plate under the membrane and use the device's default setting. Weld the membrane to the first plate, and when ready, completely remove Welding Tool. Immediately place the Cooling Clamp on the membrane over the plate and leave in place for 60 seconds. Mark the Welding Tool energy setting used for that particular plate on the membrane near the fastener.

4. Place Induction Welding Tool on the next plate as previously done and increasing induction energy one level by depressing the ▲ (UP) button once. After welding, immediately place the Cooling Clamp over the plate. Mark the Welding Tool energy setting used for that particular plate on the membrane near the fastener.

5. Repeat above procedure for the remainder of the plates, increasing induction energy one level for each plate.

6. After allowing the membrane and plates to cool to ambient temperature, remove Cooling Clamps. Turn the membrane over and use a pair of pliers to peel the RhinoBond Plates from underside of membrane to determine bonding strength. Examine the top of the plates for weld quality. A 100% bond to the top of the plate is required.

7. Repeat trial process, if needed, adjusting energy level up or down until desired results are achieved.

8. Set the Induction Tool to the setting the produces a 100% bond. Several settings may yield a 100% bond. If this happens, select the energy level setting in the middle. See below for descriptions of acceptable and unacceptable bonds.

   a. **100% Bond (required)** – Total, even, consistent adhesion of membrane. Plate makes a visible impression on the top of the membrane.

   b. **Partial Bond (unacceptable)** – Uneven/incomplete adhesion of membrane. Energy setting may be too low, heat source may be off center, or plate may be overdriven.

   c. **Excessive Heat (unacceptable)** – Membrane may turn yellow, melt or become dimpled.

B. **Calibration Tips:**

1. Recalibrating the induction tool settings is necessary when ambient temperature changes more than +/- 15°F or power to device has been interrupted. This may be necessary several times a day. Do not assume that the same setting will work throughout the day.

2. If a Low Voltage message appears in the RhinoBond display or if you do not get a 100% weld during calibration, check power at the end of the cord and determine what else is running on the same circuit. Power may be diminished if:
   a. The cord is too long or
   b. The power source is overloaded.

1.04 Installation

A. After placement of insulation on substrate, secure the insulation at a rate of six (6) Mule-Hide EHD Fasteners and RhinoBond Plates per 4‘ x 8‘ board in the field. Note: Avoid fastener overdrive to prevent plate from deforming.

1. Perimeter enhancements

   To meet increased uplift requirements in the perimeters and corners of each roof area, additional insulation attachment provisions must be installed as follows:

   Perimeters – insulation attachment to be increased 50% over the field

attachment requirements to nine (9) fasteners per 4' x 8' board or 1 fastener every 3.55 square feet.

Corners – insulation attachment to be increased 100% over the field attachment requirements to twelve (12) fasteners per 4' x 8' board or 1 fastener every 2.66 square feet.

a. For Factory Mutual projects, the width of the roof perimeter and corner areas is defined as the smaller of 0.1 times the building lesser plan dimension or 0.4 times the eave height (mean roof height for slopes greater than 2"/12" slope), except for heights greater than 60 ft. The minimum width of the perimeter and corner areas shall not be less than three (3) feet. Contact Mule-Hide Technical Department for Factory Mutual projects exceeding 60 ft. heights.

b. For non Factory Mutual projects, the minimum width of the perimeter and corner areas shall not be less than eight (8) feet.

B. Place Mule-Hide TPO-c membrane over the appropriate RhinoBond Plates and allow membrane to relax.

C. Place RhinoBond Induction Tool centered over the RhinoBond Welding Plate (+/- 1") under the roofing membrane.

D. Elevate the temperature of plate from ambient to 400-500°F using induction tool.

E. Immediately place Cooling Clamp on the membrane over the plate and leave in place for at least 60 seconds.

F. Resume process ensuring membrane is attached to all plates.

1.05 RhinoBond Weld Test Procedure

Perform RhinoBond weld test on all plates during construction. To determine if a weld has been made, place a heavy duty plunger next to a welded plate and create enough suction to lift the membrane. An acceptable weld will crease the membrane around the edge of the plate. If the assembly is not welded, the membrane will lift up off of the plate. Mark any plates that are not welded and return to complete the weld as required. Unwelded plates are not permitted anywhere in the system.

1.06 Membrane Hot Air Welding Procedures & Additional Securement

A. Join membrane sheets by overlapping and heat welding the seam following standard welding requirements as outlined in 3.09 Welding of Lap Areas of the Mule-Hide Mechanically Attached TPO Roofing System Specification.

B. Base Attachment at any area where the change of plane is equal to or exceeds 2" per foot (2:12) is required as outlined in Section 3.10 Additional Membrane Securement (Base Attachment) in Mule-Hide's Mechanically Attached TPO Roofing System Specification and must be done using one of the following methods:

1. Utilize RhinoBond plates and EHD fasteners placed 3-½" to 4" away from angle change as shown in Details MHT-RB1 and MHT-RB2.

2. Using 2.4" Seam Plates and EHD Fasteners placed either horizontally into the deck or vertically into the wall as depicted in Detail MHT-UN-305A.

Note: 6" or 10" RUSS products are not approved for use in RhinoBond attached systems.

1.07 Associated Installation Details

A. RhinoBond Attachment Requirements…..……..... MHT-RB1

B. Base Attachment with RhinoBond Plates…….....MHT-RB2

End of Section

This specification represents the applicable information available at the time of its publication. Mule-Hide reserves the right to change this information at any time. Contact Mule-Hide or check the Mule-Hide website (www.mulehide.com) for the latest updates regarding changes or modifications to this specification.

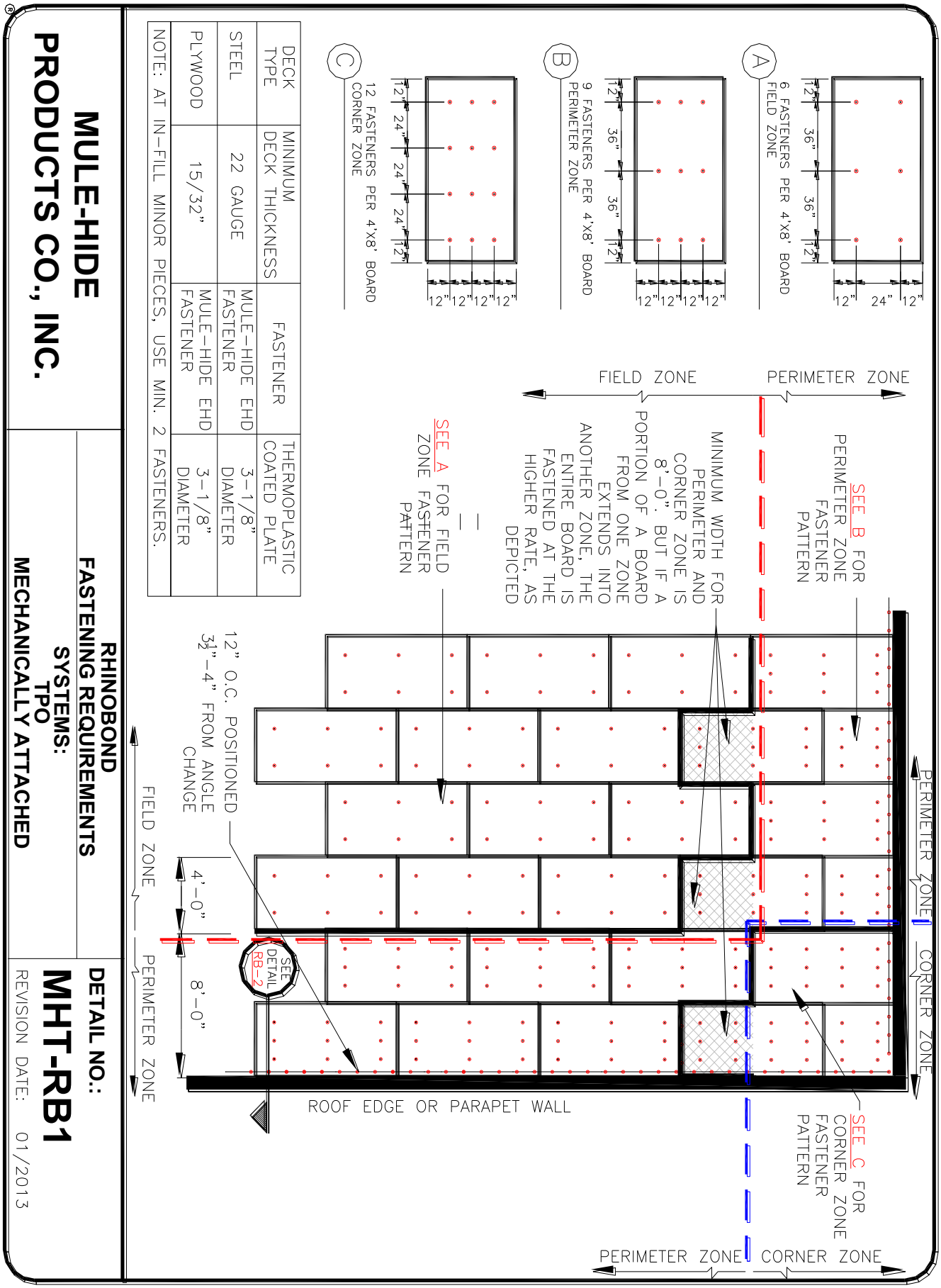

DECK TYPE	MINIMUM DECK THICKNESS	FASTENER	THERMOPLASTIC COATED PLATE
STEEL	22 GAUGE	MULE-HIDE EHD FASTENER	3-1/8" DIAMETER
PLYWOOD	15/32"	MULE-HIDE EHD FASTENER	3-1/8" DIAMETER

NOTE: AT IN-FILL MINOR PIECES, USE MIN. 2 FASTENERS.

MULE-HIDE PRODUCTS CO., INC.

RHINOBOND FASTENING REQUIREMENTS
SYSTEMS: TPO
MECHANICALLY ATTACHED

DETAIL NO.:
MHT-RB1
REVISION DATE: 01/2013

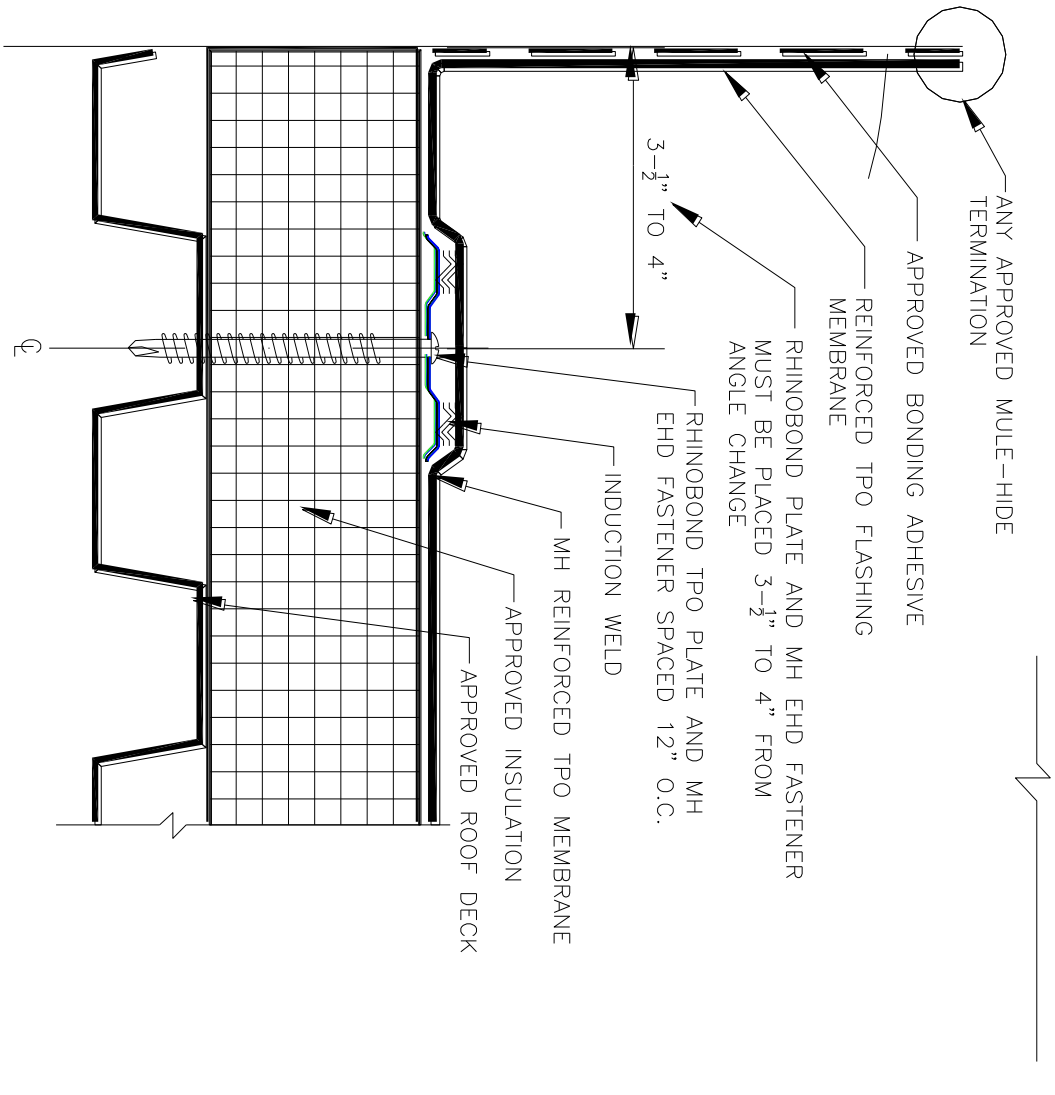

NOTES:

1. POSITION RHINOBOND PLATES 3-1/2" TO 4" FROM ANGLE CHANGE.
2. FLASHING MEMBRANE REQUIRES BONDING ADHESIVE.
3. MULE-HIDE EHD FASTENERS AND RHINOBOND TPO PLATES ARE REQUIRED OVER STEEL AND WOOD DECKS.
4. THIS METHOD OF MEMBRANE ATTACHMENT IS NOT FOR USE WITH NON-FACED EXPANDED POLYSTYRENE (EPS) OR EXTRUDED POLYSTYRENE (XPS) INSULATION.
5. THE USE OF 6" OR 10" PS RUSS IS NOT APPROVED WITH THIS METHOD OF ATTACHMENT.

MULE-HIDE PRODUCTS CO., INC.

RHINOBOND BASE ATTACHMENT SYSTEMS: TPO MECHANICALLY ATTACHED

DETAIL NO.: **MHT-RB2**

REVISION DATE: 01/2013

MULE-HIDE PRODUCTS CO., INC
Mechanically Attached Roofing System
SUMMARY SPECIFICATION

TPO Systems

This Summary Specification is a brief overview of Mule-Hide Product's specification and requirements for a Mechanically Attached Mule-Hide Reinforced TPO Roofing System and is intended for use as a submittal in a bid package. Specifier's and Mule-Hide Warranty Eligible Contractors must comply with Mule-Hide Product's specifications and requirements prior to design or bid.

Part 1 General

1.01 Description

The Mule-Hide Mechanically Attached Reinforced TPO Roofing System utilizes a (maximum) 12' wide, scrim reinforced Mule-Hide TPO membrane in thickness of 45, 60, or 80 mil. Approved insulation is attached to the substrate with Mule-Hide Insulation fasteners and plates and the TPO membrane is attached to the substrate with System Fasteners and Plates. Adjoining sheets are overlapped approximately 5-1/2" and seamed together with a min 2" wide heat weld.

1.02 Quality Assurance

A. The roofing system must be installed by a Mule-Hide Warranty Eligible Contractor in accordance with installation guidelines and detail drawings as approved by Mule-Hide. Prior written approval from the Mule-Hide Warranty Department is required for all deviations from Mule-Hide's published specifications and details.

B. Projects requesting a Labor and Material Warranty will be inspected by a Mule-Hide Representative to verify that Mule-Hide's installation and material requirements have been met.

C. Mule-Hide roofing systems offer a variety of Underwriters Laboratories (UL), Factory Mutual (FM) and other ratings. Consult the appropriate approval guides and Mule-Hide Products for specific code approvals.

1.03 Submittals

A. To ensure compliance with Mule-Hide's warranty requirements contact the Mule-Hide Warranty Department if any of the following conditions exist.
   1. Specified wind speed warranty greater than 55 MPH.
   2. Building height > 60'
   3. Projects located in coastal or high wind zones.
   4. Pressurized buildings
   5. Cold Storage or Freezer Buildings
   6. Membrane exposed to chemicals
   7. OSB roof deck

B. Submit a completed Warranty Application form to Mule-Hide prior to biding. Also include fastener pullout testing results as required for non-standard substrates.

C. All projects must have a Mule-Hide warranty application number assigned prior to inspection.

1.04 Product Delivery, Storage, and Handling

A. Deliver materials to the job site in original, unopened containers, with the manufacturer's name, brand name and installation instructions.

B. Store all materials in a dry, clean area protected from the elements, as per manufacturer's recommendations.

1.05 Job Conditions

A. All existing wet or damaged roofing materials must be removed and replaced with new materials.

B. All existing phenolic insulation and sprayed-in-place urethane roofs must be removed.

C. The specifier must determine the use and placement of vapor retarders. Consult ASHRAE (American Society of Heating, Refrigerating, and Air-Conditioning Engineers, Inc.) and NRCA (National Roofing Contractors Association) publications.

E. Coordinate work between all trades to avoid traffic over completed sections of roofing.

1.06 Warranty.

Fees are required for all Labor and Material (System) Warranties. System Warranties must be obtained through a Mule-Hide Warranty Eligible Applicator. All projects requesting a System Warranty must be inspected by a Mule-Hide Representative. Components of the roofing system must be supplied by Mule-Hide. Warranty covers only Mule-Hide supplied materials. Sample warranties are available upon request. Contact Mule-Hide Warranty Department for warranty requirements.

Part 2 Products

2.01 General

The components of this roofing system are to be manufactured, supplied, or approved in writing by Mule-Hide Products.

2.02 Membrane

Mule-Hide White, Gray, or Tan, reinforced 45, 60, or 80-mil thick Thermoplastic Polyolefin (TPO) membrane is used for this system. The membrane is available in a variety of widths up

to 12' and in lengths of 100'. Refer to our Product Data Sheet for physical properties and other information.

2.03 Related Materials
Mule-Hide products include: Reinforced and Non-Reinforced Flashings, Bonding Adhesives, TPO Cut-Edge Sealant, TPO Coated Metal, Membrane fasteners and discs, Thermoplastic One-Part Pourable Sealer, All-Purpose Bar, TPO Walkway Roll, Universal Single Ply Sealant, and other components.

Part 3 Execution

3.01 General

A. Work should begin at the highest point of the roof level and proceed to the lowest point. Work should be completed on a daily bases including flashings, terminations, and daily seals.

B. Prepare the existing roof deck or substrate according to Mule-Hide design guides and full-system specifications prior to applying the new roofing system.

3.02 Roof Deck Criteria

A. A proper substrate shall be provided by the building owner. The structure shall be able to withstand normal construction loads and live loads.

B. Substrate must allow for drainage so that all water is removed within 48 hours after a rain.

3.03 Substrate Preparation

A. Re-cover projects - All wet or damaged materials must be removed and replaced with new materials.

B. Substrate must be clean, level, and smooth so that the insulation lays flat. Fresh applications of bitumen based roof cement must be removed or covered.

3.04 Installation
Refer to the applicable Product Data Sheets and Material Safety Data Sheets for cautions and warnings.

A. Insulation Attachment
Attach roof insulation with Manufacturer supplied roofing fasteners and plates. Attachment rates will vary depending upon type and size of insulation board installed. Consult Mule-Hide Warranty Department for attachment requirements.

B. Membrane Installation and Hot Air Welding
Place membrane over substrate with minimum 5-1/2" overlap at lap seams and positioned so that laps will shed water. Allow membrane to relax. After membrane has relaxed, fold membrane back to expose underlying sheet. Install System Fasteners and Plates along seam edge. Sheet width, as well as spacing of Fasteners and plates will vary depending upon wind uplift requirements. Consult Mule-Hide Technical Department for attachment requirements. Fold sheet back and hot-air weld seams with automatic welder to achieve a minimum 2" wide heat weld. Hand welding of field seams is not acceptable.

C. Additional Membrane Securement
The membrane must be secured at the perimeter of each individual roof area, projection, and any angle change that exceeds 2" per lineal foot. Consult Mule-Hide's published detail drawings.

D. Membrane Flashing
All existing base flashings are to be removed or covered with a suitable material. Install new membrane flashings as per manufactures details and guidelines. Flashings must be terminated along top edge as per appropriate Mule-Hide detail.

E. Other Related Work

1. Walkways should be provided in areas where regular rooftop traffic is expected. Walkways are considered a maintenance item and are excluded from the Mule-Hide warranty.

2. Mule-Hide TPO Walkway Rolls are to be installed over clean, dry surfaces, with a minimum 6" spacing over field seams. Hot air weld the perimeter of the Walkway Roll to the field membrane.

3. Concrete pavers may be used if installed over one layer of HP Protection Mat.

4. Copings, counter flashing and other metal work shall be fastened to resist wind uplift and prevent buckling. Metal should be sealed to prevent moisture infiltration.

This summary specification represents the applicable information available at time of publication. Mule-Hide reserves the right to change this information at any time. Contact Mule-Hide Products or visit our website at www.mulehide.com for the latest updates, changes, or modifications to this summary specification.

MULE-HIDE PRODUCTS CO., INC
RhinoBond Roofing System
SUMMARY SPECIFICATION

TPO Systems

This Summary Specification is a brief overview of Mule-Hide Product's specification and requirements for a RhinoBond Mule-Hide Reinforced TPO Roofing System and is intended for use as a submittal in a bid package. Specifier's and Mule-Hide Warranty Eligible Contractors must comply with Mule-Hide Product's specifications and requirements prior to design or bid.

Part 1 General

1.01 Description

The Mule-Hide RhinoBond Reinforced TPO Roofing System utilizes a (max) 12' wide, scrim reinforced Mule-Hide TPO membrane in thickness of 45, 60, or 80 mil. Approved insulation is attached to the roof deck with RhinoBond TPO Plates and Mule-Hide EHD fasteners. The TPO membrane is loosely laid over the prepared substrate. Adjoining sheets are overlapped approximately 3" and seamed together with a min 2" wide heat weld. The TPO membrane is then induction welded to the RhinoBond Plates using a RhinoBond Induction Welder.

1.02 Quality Assurance

A. The roofing system must be installed by a Mule-Hide Warranty Eligible Contractor in accordance with installation guidelines and detail drawings as approved by Mule-Hide. Prior written approval from the Mule-Hide Warranty Department is required for all deviations from Mule-Hide's published specifications and details.

B. Projects requesting a Labor and Material Warranty will be inspected by a Mule-Hide Representative to verify that Mule-Hide's installation and material requirements have been met.

C. Mule-Hide roofing systems offer a variety of Underwriters Laboratories (UL), Factory Mutual (FM) and other ratings. Consult the appropriate approval guides and Mule-Hide Products for specific code approvals.

1.03 Submittals

A. To ensure compliance with Mule-Hide's warranty requirements contact the Mule-Hide Warranty Department if any of the following conditions exist.
   1. Specified wind speed warranty greater than 55 MPH.
   2. Building height > 50'
   3. Projects located in coastal or high wind zones.
   4. Pressurized buildings
   5. Cold Storage or Freezer Buildings
   6. Membrane exposed to chemicals
   7. OSB roof deck

B. Submit a completed Warranty Application form to Mule-Hide prior to biding. Also include fastener pullout testing results as required for non-standard substrates.

C. All projects must have a Mule-Hide warranty application number assigned prior to inspection.

1.04 Product Delivery, Storage, and Handling

A. Deliver materials to the job site in original, unopened containers, with the manufacturer's name, brand name and installation instructions.

B. Store all materials in a dry, clean area protected from the elements, as per manufacturer's recommendations.

1.05 Job Conditions

A. All existing wet or damaged roofing materials must be removed and replaced with new materials.

B. All existing phenolic insulation and sprayed-in-place urethane roofs must be removed.

C. The specifier must determine the use and placement of vapor retarders. Consult ASHRAE (American Society of Heating, Refrigerating, and Air-Conditioning Engineers, Inc.) and NRCA (National Roofing Contractors Association) publications.

E. Coordinate work between all trades to avoid traffic over completed sections of roofing.

1.06 Warranty.

Fees are required for all Labor and Material (System) Warranties. System Warranties must be obtained through a Mule-Hide Warranty Eligible Applicator. All projects requesting a System Warranty must be inspected by a Mule-Hide Representative. Components of the roofing system must be supplied by Mule-Hide. Warranty covers only Mule-Hide supplied materials. Sample warranties are available upon request. Contact Mule-Hide Warranty Department for warranty requirements.

Part 2 Products

2.01 General

The components of this roofing system are to be manufactured, supplied, or approved in writing by Mule-Hide Products.

2.02 Membrane

Mule-Hide White, Gray, or Tan, reinforced 45, 60, or 80-mil thick Thermoplastic Polyolefin (TPO) membrane is used for this system. The membrane is available in a variety of widths up to 12' and in lengths of 100'. Refer to our Product Data Sheet for physical properties and other information.

2.03 Related Materials

Mule-Hide products include: RhinoBond Plates, Reinforced and Non-Reinforced Flashings, Bonding Adhesives, TPO Cut-Edge Sealant, TPO Coated Metal, Membrane fasteners and discs, Thermoplastic One-Part Pourable Sealer, All-Purpose Bar, TPO Walkway Roll, Universal Single Ply Sealant, and other components.

Part 3 Execution

3.01 General

A. Work should begin at the highest point of the roof level and proceed to the lowest point. Work should be completed on a daily bases including flashings, terminations, and daily seals.

B. Prepare the existing roof deck or substrate according to Mule-Hide design guides and full-system specifications prior to applying the new roofing system.

3.02 Roof Deck Criteria

A. A proper substrate shall be provided by the building owner. The structure shall be able to withstand normal construction loads and live loads.

B. Substrate must allow for drainage so that all water is removed within 48 hours after a rain.

3.03 Substrate Preparation

A. Re-cover projects - All wet or damaged materials must be removed and replaced with new materials.

B. Substrate must be clean, level, and smooth so that the insulation lays flat. Fresh applications of bitumen based roof cement must be removed or covered.

3.04 Installation

Refer to the applicable Product Data Sheets and Material Safety Data Sheets for cautions and warnings.

A. Insulation Attachment with RhinoBond Plates

Attach roof insulation with RhinoBond TPO Plates and Mule-Hide EHD fasteners. Mule-Hide fasteners and plates are installed at a rate of 6 fasteners per 4’ x 8’ board, or 1 fastener per 5.33 sq. ft. Increase fastener density in perimeters to 9 fasteners per 4’ x 8’ board or 1 fastener per 3.55 sq. ft. In the corners install 12 fasteners per 4’ x 8’ board or 1 fastener every 2.66 sq. ft. Consult Mule-Hide Technical Department for attachment requirements.

B. Membrane Installation and Hot Air Welding

Place membrane over substrate with minimum 3” overlap at lap seams and positioned so that laps will shed water. Allow membrane to relax. After membrane has relaxed, hot-air weld seams with automatic welder to achieve a min 2” wide heat weld. Weld the TPO membrane to RhinoBond Plates with RhinoBond Induction Welder.

C. Additional Membrane Securement

The membrane must be secured at the perimeter of each individual roof area, projection, and any angle change that exceeds 2" per lineal foot. Consult Mule-Hide's published detail drawings.

D. Membrane Flashing

All existing base flashings are to be removed or covered with a suitable material. Install new membrane flashings as per manufactures details and guidelines. Flashings must be terminated along top edge as per appropriate Mule-Hide detail.

E. Other Related Work

1. Walkways should be provided in areas where regular rooftop traffic is expected. Walkways are considered a maintenance item and are excluded from the Mule-Hide warranty.

2. Mule-Hide TPO Walkway Rolls are to be installed over clean, dry surfaces, with a minimum 6" spacing over field seams. Hot-air weld the perimeter of the Walkway Roll to the field membrane.

3. Concrete pavers may be used if installed over one layer of HP Protection Mat.

4. Copings, counter flashing and other metal work shall be fastened to resist wind uplift and prevent buckling. Metal should be sealed to prevent moisture infiltration.

This summary specification represents the applicable information available at time of publication. Mule-Hide reserves the right to change this information at any time. Contact Mule-Hide Products or visit our website at www.mulehide.com for the latest updates, changes, or modifications to this summary specification.

MULE-HIDE PRODUCTS CO., INC
RhinoBond Roofing System – Linear Method
SUMMARY SPECIFICATION

TPO Systems

This Summary Specification is a brief overview of Mule-Hide Product's specification and requirements for a TPO Roofing System and is intended for use as a submittal in a bid package. Specifier's and Mule-Hide Warranty Eligible Contractors must comply with Mule-Hide Product's specifications and requirements prior to design or bid.

Part 1 General

1.01 Description

The Mule-Hide RhinoBond Linear Method Reinforced TPO Roofing System utilizes a (max) 12' wide, scrim reinforced Mule-Hide TPO membrane in thickness of 45, 60, or 80 mil. Approved insulation is attached to the substrate with either Mule-Hide Insulation fasteners and plates or an approved insulation adhesive. RhinoBond TPO Plates and fasteners are then installed over the roof insulation and attached to the roof deck. The TPO membrane is loosely laid over the prepared substrate. Adjoining sheets are overlapped approximately 3" and seamed together with a min 2" wide heat weld. The TPO membrane is then induction welded to the RhinoBond Plates using a RhinoBond Induction Welder.

1.02 Quality Assurance

A. The roofing system must be installed by a Mule-Hide Warranty Eligible Contractor in accordance with installation guidelines and detail drawings as approved by Mule-Hide. Prior written approval from the Mule-Hide Warranty Department is required for all deviations from Mule-Hide's published specifications and details.

B. Projects requesting a Labor and Material Warranty will be inspected by a Mule-Hide Representative to verify that Mule-Hide's installation and material requirements have been met.

C. Mule-Hide roofing systems offer a variety of Underwriters Laboratories (UL), Factory Mutual (FM) and other ratings. Consult the appropriate approval guides and Mule-Hide Products for specific code approvals.

1.03 Submittals

A. To ensure compliance with Mule-Hide's warranty requirements contact the Mule-Hide Warranty Department if any of the following conditions exist.
   1. Specified wind speed warranty greater than 55 MPH.
   2. Building height > 50'
   3. Projects located in coastal or high wind zones.
   4. Pressurized buildings
   5. Cold Storage or Freezer Buildings
   6. Membrane exposed to chemicals

B. Submit a completed Warranty Application form to Mule-Hide prior to biding. Also include fastener pullout testing results as required for non-standard substrates.

C. All projects must have a Mule-Hide warranty application number assigned prior to inspection.

1.04 Product Delivery, Storage, and Handling

A. Deliver materials to the job site in original, unopened containers, with the manufacturer's name, brand name and installation instructions.

B. Store all materials in a dry, clean area protected from the elements, as per manufacturer's recommendations.

1.05 Job Conditions

A. All existing wet or damaged roofing materials must be removed and replaced with new materials.

B. All existing phenolic insulation and sprayed-in-place urethane roofs must be removed.

C. The specifier must determine the use and placement of vapor retarders. Consult ASHRAE (American Society of Heating, Refrigerating, and Air-Conditioning Engineers, Inc.) and NRCA (National Roofing Contractors Association) publications.

E. Coordinate work between all trades to avoid traffic over completed sections of roofing.

1.06 Warranty.

Fees are required for all Labor and Material (System) Warranties. System Warranties must be obtained through a Mule-Hide Warranty Eligible Applicator. All projects requesting a System Warranty must be inspected by a Mule-Hide Representative. Components of the roofing system must be supplied by Mule-Hide. Warranty covers only Mule-Hide supplied materials. Sample warranties are available upon request. Contact Mule-Hide Warranty Department for warranty requirements.

Part 2 Products

2.01 General
The components of this roofing system are to be manufactured, supplied, or approved in writing by Mule-Hide Products.

2.02 Membrane
Mule-Hide White, Gray, or Tan, reinforced 45, 60, or 80-mil thick Thermoplastic Polyolefin (TPO) membrane is used for this system. The membrane is available in a variety of widths up to 12' and in lengths of 100'. Refer to our Product Data Sheet for physical properties and other information.

2.03 Related Materials
Mule-Hide products include: RhinoBond TPO Plates, Reinforced and Non-Reinforced Flashings, Bonding Adhesives, TPO Cut-Edge Sealant, TPO Coated Metal, Membrane fasteners and discs, Thermoplastic One-Part Pourable Sealer, All-Purpose Bar, TPO Walkway Roll, Universal Single Ply Sealant, and other components.

Part 3 Execution

3.01 General
A. Work should begin at the highest point of the roof level and proceed to the lowest point. Work should be completed on a daily bases including flashings, terminations, and daily seals.

B. Prepare the existing roof deck or substrate according to Mule-Hide design guides and full-system specifications prior to applying the new roofing system.

3.02 Roof Deck Criteria
A. A proper substrate shall be provided by the building owner. The structure shall be able to withstand normal construction loads and live loads.

B. Substrate must allow for drainage so that all water is removed within 48 hours after a rain.

3.03 Substrate Preparation
A. Re-cover projects - All wet or damaged materials must be removed and replaced with new materials.

B. Substrate must be clean, level, and smooth so that the insulation lays flat. Fresh applications of bitumen based roof cement must be removed or covered.

3.04 Installation
Refer to the applicable Product Data Sheets and Material Safety Data Sheets for cautions and warnings.

A. Insulation Attachment
Attach roof insulation with Manufacturer supplied roofing fasteners and plates or approved adhesive. Mule-Hide fasteners and plates are installed at min rate of 6 per 4’ x 8’ board or 1 fastener per 5.33 sq. ft.

B. RhinoBond Plates
Position RhinoBond TPO Plates in rows (5’ or 10’) over substrate spaced max 12” oc as determined by project requirements. Consult the Mule-Hide Technical Department for attachment requirements.

C. Membrane Installation and Hot Air Welding
Place membrane over substrate with minimum 3” overlap at lap seams and positioned so that laps will shed water. Allow membrane to relax. After membrane has relaxed, hot-air weld seams with automatic welder to achieve a min 2” wide heat weld. Weld the TPO membrane to RhinoBond Plates with RhinoBond Induction Welder.

D. Additional Membrane Securement
The membrane must be secured at the perimeter of each individual roof area, projection, and any angle change that exceeds 2" per lineal foot. Consult Mule-Hide's published detail drawings.

E. Membrane Flashing
All existing base flashings are to be removed or covered with a suitable material. Install new membrane flashings as per manufactures details and guidelines. Flashings must be terminated along top edge as per appropriate Mule-Hide detail.

E. Other Related Work
1. Walkways should be provided in areas where regular rooftop traffic is expected. Walkways are considered a maintenance item and are excluded from the Mule-Hide warranty.

2. Mule-Hide TPO Walkway Rolls are to be installed over clean, dry surfaces, with a minimum 6" spacing over field seams. Hot-air weld the perimeter of the Walkway Roll to the field membrane.

3. Concrete pavers may be used if installed over one layer of HP Protection Mat.

4. Copings, counter flashing and other metal work shall be fastened to resist wind uplift and prevent buckling. Metal should be sealed to prevent moisture infiltration.

This summary specification represents the applicable information available at time of publication. Mule-Hide reserves the right to change this information at any time. Contact Mule-Hide Products or visit our website at www.mulehide.com for the latest updates, changes, or modifications to this summary specification.

SECTION 6

MULE-HIDE PRODUCTS CO., INC.

20 Year Warranty
Specification Enhancements

TABLE OF CONTENTS

Section

PLEASE CONSULT THE MULE-HIDE WEBSITE FOR THE MOST CURRENT INFORMATION

MULE-HIDE PRODUCTS CO., INC
20-Year Warranty Design Enhancements
For Ballasted TPO
Roofing System Specification

TPO Systems

All products specified for this roofing system must be manufactured or approved by Mule-Hide Products Co. This criteria is limited to buildings of 75' in height or less, located in urban or suburban exposure areas. Not applicable for coastal or high wind areas.

Membrane / Adhesive Type / Other

1. 0.060" or 0.080" thick Mule-Hide TPO Reinforced Membranes.
2. All 'T' joints overlaid with TPO Non-Reinforced Flashing Membrane with heat welded seams.
3. Field/Wall seam transitions must be overlaid with TPO Non-Reinforced Flashing Membrane with heat welded seams.
4. All field seams must be heat welded.

Deck Type

1. Any roof deck capable of supporting the weight of a Ballasted System may be used.
2. The determination that the roof deck can support the required additional loads shall be the responsibility of the building owner/owner's representative.

Slope Requirement/Drainage

1. Positive drainage required (no ponding 48 hours after a rain)
2. 1/4" per horizontal foot preferred
3. 1/8" slope with sufficient number of drains and crickets/saddles may be considered
4. Maximum roof slope of 2:12

Construction Type

1. New Construction
2. Reroof - with full tear-off
3. Recover - all wet materials removed and verification by a Independent 3rd party moisture scan

Insulation/Overlayment*

Insulation Type or Overlay
Mule-Hide Polyisocyanurate - Min 1" thick - Min 18 psi
Structodek HD Fiberboard with Primed Red Coating - Min 1/2" thick
InsulFoam Expanded Polystyrene - Min 1" - Min 1 lbs density

***NOTES:**

1. Thicknesses stated are for single layer of material.
2. Consult Specification Manual for list of approved insulations for use under overlayment.
3. Insulation must be loose-laid over an approved substrate.
4. Mechanical attachment of insulation is not permitted.
5. An approved insulation adhesive may be used with prior approval.

Ballast Requirements

Building Height	Ballast Requirements
Up to 25'	#2 Stone @ 13#/SF for 10' wide perimeter #4 Stone @ 10#/SF for field of roof
26' to 50'	#2 Stone @ 13#/SF for 20' corners #2 Stone @ 13#/SF for 10' wide perimeter #4 Stone @ 10#/SF for field of roof
Over 50'	Mule-Hide recommends the use of a interlocking ballast paver system

MULE-HIDE PRODUCTS CO., INC.
20-Year Warranty Design Enhancements
For Ballasted TPO

Concrete Pavers

1. Minimum Size: 2' x 2' x 2"
2. Minimum Weight: 22 pounds per square foot
3. Membrane Protection: Rubber or plastic pedestals, or 4" x 4" sections of Mule-Hide Walkway Pads.
4. Paver type must be submitted to Mule-Hide for approval prior to bid.

Metal Accessories

1. All Metal copings, gravel stops, fascia, and drip aprons must be Mule-Hide Metal Accessories or pre-manufactured as per approved details.
2. Mule-Hide All Purpose Bar is required when a compression bar termination is specified and must be utilized in conjunction with counterflashing.
3. Mule-Hide Metal Accessories or the Metal-Era Anchor-Tite System must be used when the sheet metal is to be included under the warranty.
4. All metal scuppers must have welded (soldered) seams.

Other Requirements

1. No 'As-Built' projects. All projects are to be reviewed and approved prior to installation.
2. Shop drawings must include all pertinent details.
3. Contact Mule-Hide Technical Department for specific code requirements such as Factory Mutual (FM) or Underwriters Laboratory (UL).
4. Rubber walkway pads can not be used within 10' of the roof perimeter for buildings exceeding 50' in height.

Warranty Wind Speed (Maximum Peak Gusts)

Wind speed coverage for a specific project will vary depending on a variety of factors, including the deck type, location, height of the roof, and edge details.

Contact Mule-Hide Technical Department for specific requirements.

NOTES:

1. **These are enhancements to the Mule-Hide TPO Ballasted System Specification, as written in the Mule-Hide TPO Specification Manual. Refer to the Mule-Hide TPO Specification Manual for complete specification and details.**
2. **The information contained in this document is general information. Requirements may be different for each specific job based on the conditions of each building. Always contact Mule-Hide Technical Department to review the specific job conditions prior to bidding.**

MULE-HIDE PRODUCTS CO., INC
20-Year Warranty Design Enhancements
For Fully Adhered TPO
Roofing System Specification

TPO Systems

All products specified for this roofing system must be manufactured or approved by Mule-Hide Products Co. This criteria is limited to buildings of 100' in height or less, located in urban or suburban exposure areas. Not applicable for coastal or high wind areas.

Membrane / Adhesive Type / Other

1. 0.060" or 0.080" thick Mule-Hide TPO Reinforced Membranes.
2. Mule-Hide TPO Bonding Adhesive (solvent based), Mule-Hide Low Voc Bonding Adhesive, Mule-Hide Low VOC Bonding Adhesive – 1168, or WBBA 2000
3. All 'T' joints overlaid with TPO Non-Reinforced Flashing Membrane with heat welded seams.
4. Field/Wall seam transitions must be overlaid with TPO Non-Reinforced Flashing Membrane with heat welded seams.
5. All field seams must be heat welded.

Deck Type / Typical Fastener - Refer to Specifications for minimum pullout criteria.

Standard Roof Deck (4)	**Insulation Fastener** (1)	**Insulation Plate** (5)
Steel (22 gauge or heavier)	Mule-Hide DP #12	Mule-Hide 3" Metal Stress Plates
Structural Concrete (3,000 psi)	Mule-Hide HD-14 (2)	Mule-Hide 3" Metal Stress Plates
Plywood (Min 15/32" thick)	Mule-Hide DP #12	Mule-Hide 3" Metal Stress Plates
Wood Plank (Min 1-1/2" thick)	Mule-Hide DP #12	Mule-Hide 3" Metal Stress Plates
Fibrous Cement & Gypsum (2)(3)	TL Fasteners by Tru-Fast	3" TL Galvalume Insulation Plate by Tru-Fast

NOTES:

1. Heavier gauge fasteners may be required to meet Factory Mutual or code requirements.
2. Other fasteners may be considered, submit request to Mule-Hide prior to bidding.
3. Pullout testing is required, must exceed 360 pounds with TL Fastener.
4. Contact Mule-Hide Technical Department for other roof decks or non-standard roof decks.
5. 2.4" Seam Plates are NOT approved for use to fasten insulation.

Slope Requirement/Drainage

1. Positive drainage required (no ponding 48 hours after a rain)
2. 1/4" per horizontal foot preferred
3. 1/8" slope with sufficient number of drains and crickets/saddles may be considered

Construction Type

1. New Construction
2. Reroof - with full tear-off
3. Recover - all wet materials removed and verification by a Independent 3rd party moisture scan

Insulation/Overlayment - Mechanical Attachment*

	Fasteners per 4' x 8' board		
Insulation Type or Overlay	**Field**	**Perimeter**	**Corner**
Mule-Hide Polyisocyanurate - Min 2" thick (top layer) - Min 20 psi	8	12	16
Mule-Hide Polyisocyanurate - Min 1.5" up to 2" thick - Min 20 psi	12	18	24
StructoDek HD Fiberboard with Primed Red Coating - Min 1/2" thick- Installed as an overlay or recover board	16	24	32
Dens Deck Prime or Securock - Min 1/4" - Installed as an overlay or recover board	12	18	24
OSB - Min 7/16" thick - Installed as an overlay	17	25	32

MULE-HIDE PRODUCTS CO., INC.
20-Year Warranty Design Enhancements
For Fully Adhered TPO

***NOTES:**

1. InsulFoam and InsulFoam R-Tech insulation is approved for warranty but it must be installed with an approved overlay board.
2. Thicknesses stated are for single layer of material.
3. Consult Specification Manual for list of approved insulations for use under overlayment.
4. Polyisocyanurate less than 1.5" and InsulFoam expanded polystyrene must have approved overlayment.
5. Premium Warranty requires the use of Mule-Hide Polyisocyanurate insulation.
6. Insulation fastening density shall not be less than 1 per 2 square feet on fibrous cement and gypsum decks.
   Certain codes may require additional fastening requirements.
7. Mule-Hide defines perimeter areas as a minimum of 8 feet. Corners areas are the intersections of the perimeter areas.
8. Factory Mutual defines perimeter areas as the lesser of 0.1 times the building width or 0.4 times the building height. Corners areas are the intersections of the perimeter areas.

Insulation/Overlayment - Adhesive Attachment

1. Insta-Stik by Dow Chemical Company or Weather-Tite One-Step by Millenium - Warranty Application must include a copy of the manufacturer's letter of acceptance for the project, including application rates for that specific project. Other Manufactures may be considered, submit prior to bidding.

Metal Accessories

1. All Metal copings, gravel stops, fascia, and drip aprons must be Mule-Hide Metal Accessories or pre-manufactured as per approved details.
2. Mule-Hide All Purpose Bar is required when a compression bar termination is specified and must be utilized in conjunction with counterflashing.
3. Mule-Hide Metal Accessories or the Metal-Era Anchor-Tite System must be used when the sheet metal is to be included under the warranty.
4. All metal scuppers must have welded (soldered) seams.

Other Requirements

1. No 'As-Built' projects. All projects are to be reviewed and approved prior to installation.
2. Shop drawings must include all pertinent details.
3. Contact Mule-Hide Technical Department for specific code requirements such as Factory Mutual (FM) or Underwriters Laboratory (UL).

Warranty Wind Speed (Maximum Peak Gusts)

Wind speed coverage for a specific project will vary depending on a variety of factors, including the deck type, fastening density, location, height of the roof, and edge details.

Contact Mule-Hide Technical Department for specific requirements.

NOTES:

1. **These are enhancements to the Mule-Hide TPO Fully Adhered System Specification, as written in the Mule-Hide TPO Specification Manual. Refer to the Mule-Hide TPO Specification Manual for complete specification and details.**
2. **The information contained in this document is general information. Requirements may be different for each specific job based on the conditions of each building. Always contact Mule-Hide Technical Department to review the specific job conditions prior to bidding.**

MULE-HIDE PRODUCTS CO., INC
20-Year Warranty Design Enhancements
For Mechanically Attached TPO
Roofing System Specification

TPO Systems

All products specified for this roofing system must be manufactured or approved by Mule-Hide Products Co. This criteria is limited to buildings of 50' in height or less, located in urban or suburban exposure areas. Not applicable for coastal or high wind areas.

Membrane / Adhesive Type / Other

1. 0.060" or 0.080" thick Mule-Hide TPO Reinforced Membranes.
2. All 'T' joints overlaid with TPO Non-Reinforced Flashing Membrane with heat welded seams.
3. Field/Wall seam transitions must be overlaid with TPO Non-Reinforced Flashing Membrane with heat welded seams.
4. All field seams must be heat welded.

Deck Type / Typical Fastener - Refer to Specifications for minimum pullout criteria.

Standard Roof Deck	**Max Sheet Width**	**Max Fastener Spacing**	**Fastener** (1)	**Seam Plate** (1)(5)
Steel - Min 22 ga.	12' 10' 8'	6" OC 12" OC 12" OC	HD-14 HD-14 HD-14	2.4" 2.4" 2.4"
Wood Plank - Min 2x or Plywood - Min 23/32"	12' 10' 8'	6" OC 12" OC 12" OC	HD-14 HD-14 HD-14	2.4" 2.4" 2.4"
Plywood - Min 15/32"	8'	6" OC	HD-14	2.4"
OSB – Min 15/32" (3)	8'	6" OC	HD-14	2.4"
Structural Concrete - Min 3,000 psi	12' 10' 8'	6" OC 12" OC 12" OC	HD-14 HD-14 HD-14	2.4" 2.4" 2.4"

Notes:

1. Heavier gauge fasteners may be required to meet Factory Mutual or code requirements.
2. Other fasteners may be considered, submit request to Mule-Hide prior to bidding.
3. Mechanically attached systems are not allowed over Oriented Strand Board (OSB) decks without prior approval by the Mule-Hide Technical Department. Mule-Hide will not issue system warranties on "As-Built" projects where Mule-Hide did not grant approval prior to the start of the work.
4. Contact Mule-Hide Technical Department for other roof decks or non-standard roof decks.
5. 3" Insulation Plates are NOT approved for use to fasten membrane.

Slope Requirement/Drainage

1. Positive drainage required (no ponding 48 hours after a rain)
2. 1/4" per horizontal foot preferred
3. 1/8" slope with sufficient number of drains and crickets/saddles may be considered

Construction Type

1. New Construction
2. Reroof - with full tear-off
3. Recover - all wet materials removed and verification by a Independent 3rd party moisture scan

MULE-HIDE PRODUCTS CO., INC
20 - Year Warranty Design Enhancements
For Mechanically Attached TPO
Roofing System Specification

Insulation/Overlayment - Mechanical Attachment*

Insulation Type or Overlay	Board Size	
	4' x 4'	4' x 8'
Mule-Hide Polyisocyanurate - Min 2" thick (top layer) - Min 20 psi	4	5
Mule-Hide Polyisocyanurate - Min 1.0" thick (top layer) - Min 20 psi	4	6
InsulFoam R-Tech Expanded Polystyrene 4'x8' – Min 1.25 lb density, 1" thick	4	6
Insulfoam R-Tech Fan-Fold Expanded Polystyrene – Min 1.25 lb density, 1" thick	See Notes	See Notes
StructoDek HD Fiberboard with Primed Red Coating - Min 1/2" thick	4	6
Dens Deck / Dens Deck Prime / Securock - Min 1/4"	4	6

***NOTES:**

1. Gypsum board or suitable base sheet may be approved as needed to meet required fire code.
2. Consult Specification Manual for list of approved insulations for use under overlayment.
3. Warranty requires the use of Mule-Hide Polyisocyanurate insulation.
4. Refer to Technical Bulletin #1302 Use of InsulFoam Insulation for fan fold minimum fastening requirements.
5. Contact Mule-Hide Technical Department for Polyisocyanurate less than 1.5" in thickness.
6. Certain codes may require additional fastening requirements.

Insulation/Overlayment - Adhesive Attachment

1. Insta-Stik by Dow Chemical Company or Weather-Tite One Step by Millenium - Other Manufactures may be considered, submit prior to bidding.

Metal Accessories

1. All Metal copings, gravel stops, fascia, and drip aprons must be Mule-Hide Metal Accessories or pre-manufactured as per approved details.
2. Mule-Hide All Purpose Bar is required when a compression bar termination is specified and must be utilized in conjunction with counterflashing.
3. Mule-Hide Metal Accessories or the Metal-Era Anchor-Tite System must be used when the sheet metal is to be included under the warranty.
4. All metal scuppers must have welded (soldered) seams.

Other Requirements

1. No 'As-Built'. All projects are to be reviewed and approved prior to installation.
2. Shop drawings must include all pertinent details.
3. Contact Mule-Hide Technical Department for specific code requirements such as Factory Mutual (FM) or Underwriters Laboratory (UL).

Warranty Wind Speed (Maximum Peak Gusts)

Wind speed coverage for a specific project will vary depending on the deck type, fastening density, location and height of the roof. Certain codes may require additional fastening requirements.

Contact Mule-Hide Technical Department for specific requirements such as sheet width and fastener spacing.

NOTES:

1. **These are enhancements to the Mule-Hide TPO Mechanically Attached System Specification, as written in the Mule-Hide TPO Specification Manual. Refer to the Mule-Hide TPO Specification Manual for complete specification and details.**

2. **The information contained in this document is general information. Requirements may be different for each specific job based on the conditions of each building. Always contact Mule-Hide Technical Department to review the specific job conditions prior to bidding the project.**

SECTION 7

MULE-HIDE PRODUCTS CO., INC.

TPO
Technical Bulletins

TABLE OF CONTENTS

PLEASE CONSULT THE MULE-HIDE WEBSITE FOR THE MOST CURRENT INFORMATION

Technical Bulletin # TPO –MA01-2006

Membrane Minimum Fastener Spacing Requirements For Mechanically Attached Systems With 55-MPH Wind Speed Coverage

Issued: January 01, 2006
Revised: Oct-2013

This criteria is limited to buildings of 100' in height or less located in urban or suburban exposure areas. Not applicable for coastal or high wind areas. Maximum design wind speeds of 100-MPH. Contact Mule-Hide Technical Department for Factory Mutual Approved systems or compliance with Building Code Requirements such as Florida Product Approval, Texas Department of Insurance, Miami-Dade, etc.

Chart is based on HDP (#14) Fasteners and 2.4" Seam Plates

Roof Deck	Roof Height	Width of Field Sheet	Fastener Spacing
Steel Roof Decks			
Steel Min 22 gauge	Up to 60'	12'	6" oc
		10'	12" oc
		8'	12" oc
	61' to 100'	12'	6" oc
		10'	6" oc
		8'	6" oc
Steel - 24 gauge Metal Roof Panels	0' to 100'	Pull test required. Contact Mule-Hide for additional information. System may not quality for warranty.	
Steel - 26 gauge Metal Roof Panels	N/A	Not eligible for warranty with direct attachment to decking. Contact Mule-Hide Technical Department.	
Wood Roof Decks			
2X Plank ¾" Plywood	Up to 60'	12'	6" oc
		10'	12" oc
		8'	12" oc
	61' to 100'	12'	6" oc
		10'	6" oc
		8'	12" oc
5/8" Plywood	Up to 60'	10'	12" oc
		8'	12" oc
	61' to 100'	10'	6" oc
		8'	12" oc
1X Plank ½" Plywood	Up to 60'	10'	6" oc
		8'	12" oc
	61' to 100'	8'	6" oc
OSB	N/A	Contact Mule-Hide Technical Department prior to starting work.	

Roof Deck	Roof Height	Width of Field Sheet	Fastener Spacing
Structural Concrete Roof Decks			
2500 psi 2" min pour or precast	Up to 60'	12'	12" oc
		10'	12" oc
		8'	12" oc
	61' to 100'	12'	6" oc
		10'	6" oc
		8'	12" oc
Insulating Concrete (Fasteners must penetrate form deck)			
Steel Form Deck	0' to 100'	Pull test required. Contact Mule-Hide for additional information. System may not quality for warranty.	
Other Roof Decks			
Gypsum Concrete Cementitious Wood Fiber Other	0' to 100'	Pull test required. Contact Mule-Hide for additional information. System may not quality for warranty.	

Notes:
1. HDP Fasteners (#14) are required system fasteners for Mule-Hide Warranties.
2. EHD Fasteners (#15) are required for 'rated assemblies" such as Factory Mutual, Miami-Dade, etc. Contact Mule-Hide Technical Department for additional information.
3. 2.4" Seam Plates are required for all mechanically attached systems.
4. 3" Insulation plates are not approved for use to fasten membrane.
5. Mechanically attached systems are not allowed over Oriented Strand Board (OSB) decks without prior approval by the Mule-Hide Technical Department. Mule-Hide will not issue system warranties on "As-Built" projects where Mule-Hide did not grant approval prior to the start of the work.
6. Refer to Mule-Hide Fastener Guidelines for additional information on fastener use and installation.
7. Refer to Technical Bulletin #TPO-MA02-2006 for perimeter enhancement requirements.

FOR PERIMETER ENHANCEMENT REQUIREMENTS REFER TO TECHNICAL BULLETIN #TPO-MA02-2006

Any information given on this Technical Bulletin is subject to change without notice.
Please visit our website at www.mulehide.com or contact Mule-Hide Technical Department at (800-786-1492) for questions or additional information.

Technical Bulletin # TPO –MA02-2006

Perimeter Enhancement Requirements

Mechanically Attached System
With 55-MPH Wind Speed Coverage

January 01, 2006
Revised Oct-2013

REFER TO TECHNICAL BULLETIN #TPO-MA01-2006 FOR FASTENER SPACING REQUIRMENTS

Limitations	
Contact Mule-Hide for all projects requiring specific Factory Mutual or Building Code compliance such as Florida Product Approval, Texas Department of Insurance, etc.	For buildings 100 ft. or less in height, located in urban, rural or suburban exposure areas. Not applicable for coastal or high wind areas. Maximum design wind speed of 100-MPH.
Building Height	**Minimum Perimeter Enhancement Required**
0 - 34 feet	1 Perimeter sheet (1)(2)
	1 Perimeter enhancement width (3)
35 – 100 ft	2 Perimeter sheets (1)(2) (wind zones up to 100 mph)
	2 Perimeter Enhancement Widths (2) (wind zones up to 100 mph)
Higher than 100 ft. or higher wind zones.	Contact Mule-Hide Tech. Dept.
Projects in exposure D category (coastal areas)	Contact Mule-Hide Tech. Dept.
Roof edges along interior walls or roof edges with 8 ft. or higher walls. (Walls extend above the roof level)	No perimeter enhancement required
FM Approval	
For buildings where FM approved securement is required and for buildings that do not meet the "Limitations" stated above.	Install perimeter enhancements throughout the corner/perimeter areas of the roof. The width of these areas is determined by the lesser of the following two calculations: a. 0.1 x the building width = or b. 0.4 x the building height = In no event shall the perimeter/corners be less than 4 ft.

Notes:

1. **When using Mule-Hide standard sheet widths:**
   a. **8' wide field sheets use 4' wide perimeter sheets**
   b. **10' wide field sheets use 6' wide perimeter sheets**
   c. **12' wide field sheets use 6' wide perimeter sheets.**
2. **If the contractor elects to cut perimeter sheets from scrap membrane, the perimeter sheet dimension MUST be as follows:**
   a. **8' wide field sheet – no less than 4' wide to no larger than 4'-9" wide perimeter sheet**
   b. **10' wide field sheet – no less than 5' wide to no more than 6' wide perimeter sheet**
   c. **12' wide field sheet – no less than 6' wide to no more than 7'-2" wide perimeter sheet**
3. **Perimeter enhancement widths are used when the 10" RUSS and/or plates/fasteners through the membrane methods are utilized for perimeters.**

Technical Bulletin # TPO –MA02-2006 (Continued)

Perimeter Enhancement Width Dimension

Width of Field Sheet	Perimeter Sheet Width (2)	Perimeter Enhancement Width	
		10” RUSS	Plates/Fasteners Through Membrane
4’ (1)	N/A	2’	2’
6’ (1)	N/A	3’	3’
8'	4'	4'	4'
10'	6’	5’	5’
12'	6'	6'	6'

Notes:

1. **The contractor must contact the Mule-Hide Technical Department prior to using 4’ or 6’ wide field sheets to determine minimum perimeter enhancement requirements.**
2. **Based on standard size widths provided by Mule-Hide.**

Perimeter Zone Definition

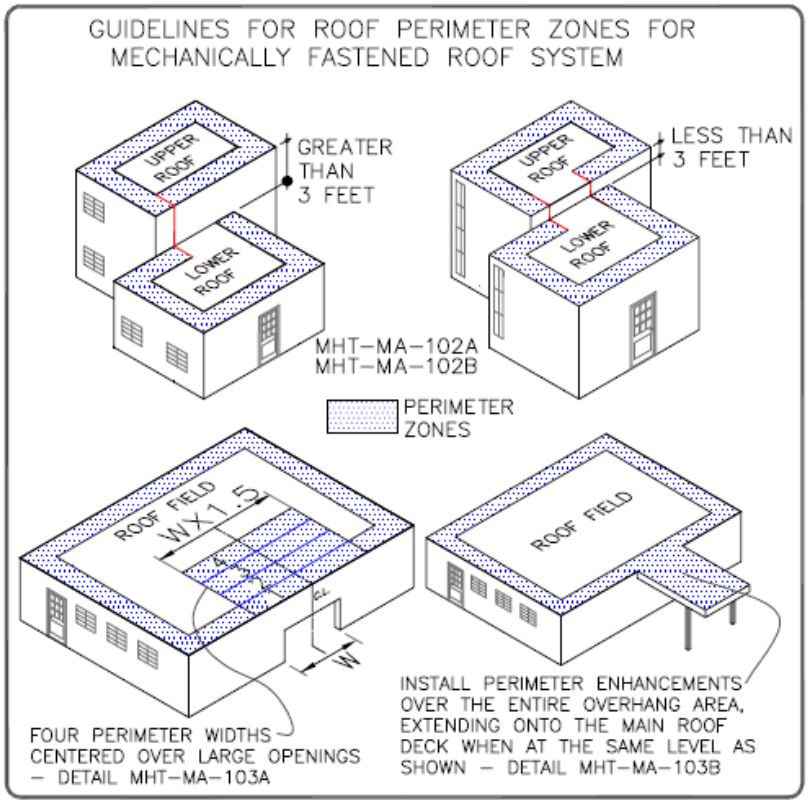

Contact Mule-Hide Technical Department for FM compliant roof assemblies, fastener spacing, required perimeter enhancements and appropriate fasteners.

Any information given on this Technical Bulletin is subject to change without notice. Please visit our website at www.mulehide.com or contact the Mule-Hide Technical Department at (800)-786-1492) for questions or additional information.

Mule-Hide Technical Bulletin
TPO FA01-2006

Membrane and Insulation Fastener Spacing Requirements - Fully Adhered Systems

Revised Oct-2013

Membrane Attachment:

A. The Mule-Hide membrane shall be mechanically attached at the base of all parapet walls, curbs, peaks, valley and slope intersections where the net change in slope is greater than 2” per foot. Attachment is to be made with the following methods:

1. Mule-Hide HDP or EHD Fasteners and 2.4" Seam Plates through the membrane spaced 12” on center and attached into the roof deck.
2. Mule-Hide 6” Pressure Sensitive RUSS with 2.4” Seam Plates and HDP or EHD Fasteners adhered to the bottom of the membrane with TPO Primer. 6” Pressure Sensitive RUSS is not approved for use in a Fleeceback, Fleeceback Plus, or Self-Adhering system.
3. Mule-Hide A/P Bar with HDP or EHD Fasteners spaced 12” on center attached to either the roof deck or vertical substrate.

B. Fasteners installed in steel decks and plywood decks must penetrate through the deck a minimum 3/4 inch. When installed in wood plank decks, fasteners must penetrate into the deck a minimum of 1 inch. Fasteners installed into concrete decks must penetrate into the deck a minimum of 1 inch. **Contact Mule-Hide for specific fastener type needed for attachment of the insulation and membrane into various deck types.**

Insulation Attachment:

A. Mule-Hide minimum standard insulation attachments: Individual project requirements may require more fasteners than indicated below. It is the contractor’s sole responsibility to ensure that the system being installed is in compliance with the State and local building code. Local building code requirements shall apply when they supersede these minimums. When using multiple layers of insulation or combining different board types, the type and thickness of the top layer of insulation determines the minimum number of fasteners required. For approved insulation, the minimum attachment for the field of the roof is:

	Fasteners per 4' x 8' board		
Insulation Type or Overlay	**Field**	**Perimeter** (1)	**Corner** (2)
Approved Polyisocyanurate - Min 2" thick (top layer)	8	12	16
Approved Polyisocyanurate - Min 1.5" up to 2" thick	12	18	24
HD Fiberboard - Min 1/2" thick- Installed over Approved Insulation	16	24	32
Dens Deck Prime - Min 1/4" thick - Installed over Approved Insulation	12	18	24
OSB - Min 7/16" thick - Installed over Approved Insulation	17	25	32
Approved OSB/Polyisocyanurate Composite - Min 2" thick	17	25	32

Notes:
1. Mule-Hide requires increased attachment in the perimeter areas (50% more fasteners than field)
2. Mule-Hide requires increased attachment in the corner areas (100% more fasteners than field).

C. Buildings higher than 100 feet, located in high wind zones, located along the coastline, or projects that request wind coverage greater than that specified in the warranty (peak gust to 55 mph) will require increased attachment rates and insulation requirements. Contact Mule-Hide Technical Department prior to bidding projects with these requirements for project specific fastener rates and insulation requirements.

D. **Mule-Hide defines the minimum perimeter area as 8' in from the roof edge along all exterior roof edges.**

Technical Bulletin # TPO FA01-2006 (Continued)

E. For those contractors wishing to install a roof system according to Factory Mutual guidelines, but not requiring FM compliance, the following calculation for perimeter and corner areas apply:

Perimeter roof areas: Increase fastener density by 50%.
Corner roof areas: Increase fastener density by 100%. The perimeter is defined by the lesser of the following calculations:

0.1 times the lesser plan dimension (building width) or
0.4 times the height of the building
with a minimum width of 4'.

Contact Mule-Hide Technical Department for attachments that require compliance with Factory Mutual (FM) requirements. Requirements change with deck types, building locations, roof heights, insulation used, etc.

Illustration 1, Typical Fastener layouts Insulation

Fully Adhered

Wood Fiber

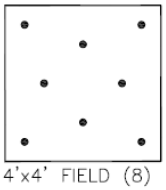

4'x4' FIELD (8)

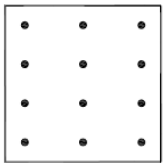

4'x4' PERIMETERS (12)

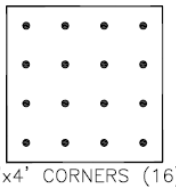

4'x4' CORNERS (16)

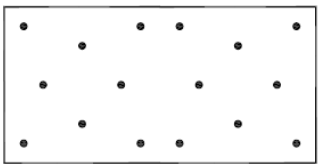

4'x8' FIELD (16)

1 FASTENER PER EVERY 2 SQ. FT.

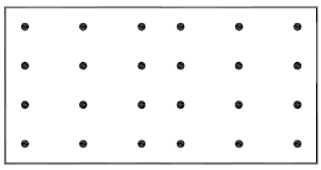

4'x8'PERIMETERS (24)

1 FASTENER PER EVERY 1.33 SQ. FT.

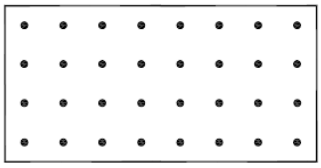

4'x8' CORNERS (32)

1 FASTENER PER EVERY 1 SQ. FT.

Polyisocyanurate Insulation – 1.5" to less than 2" thick

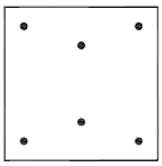

4'x4' FIELD (6)

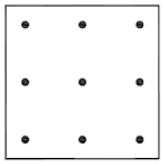

4'x4' PERIMETERS (9)

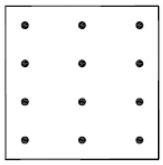

4'x4' CORNERS (12)

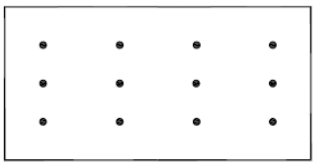

4'x8' FIELD (12)

1 FASTENER PER EVERY 2.66 SQ. FT.

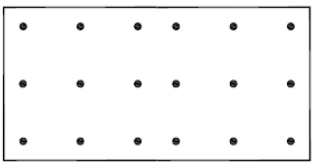

4'x8' PERIMETERS (18)

1 FASTENER PER EVERY 1.77 SQ. FT.

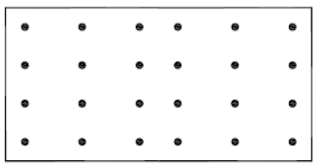

4'x8' CORNERS (24)

1 FASTENER PER EVERY 1.33 SQ. FT.

Polyisocyanurate Insulation – 2" thick or greater

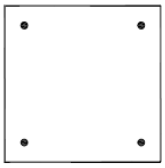

4'x4' FIELD (4)

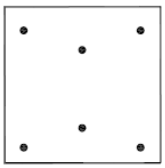

4'x4' PERIMETERS (6)

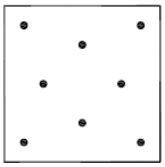

4'x4' CORNERS (8)

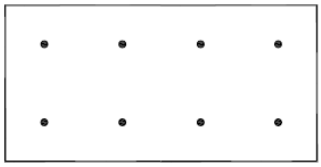

4'x8' FIELD (8)

1 FASTENER PER EVERY 4 SQ. FT.

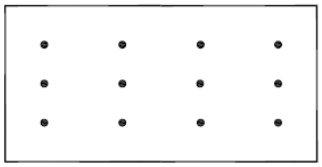

4'x8' PERIMETERS (12)

1 FASTENER PER EVERY 2.66 SQ. FT.

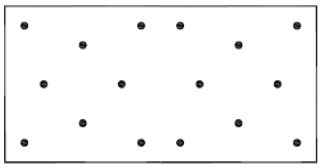

4'x8' CORNERS (16)

1 FASTENER PER EVERY 2 SQ. FT.

Dens Deck or SecurRock

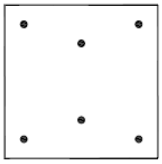

4'x4' FIELD (6)

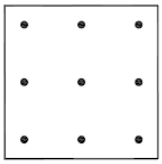

4'x4' PERIMETERS (9)

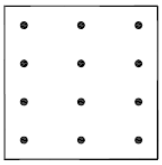

4'x4' CORNERS (12)

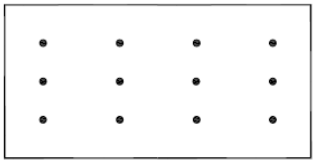

4'x8' FIELD (12)

1 FASTENER PER EVERY 2.66 SQ. FT.

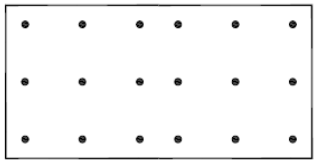

4'x8' PERIMETERS (18)

1 FASTENER PER EVERY 1.77 SQ. FT.

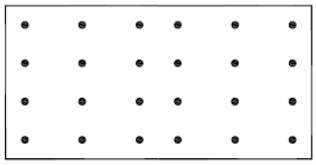

4'x8' CORNERS (24)

1 FASTENER PER EVERY 1.33 SQ. FT.

OSB

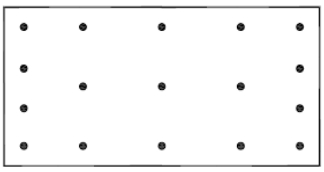

4'x8' FIELD (17)

FASTENER PER EVERY 1.88 SQ. FT.

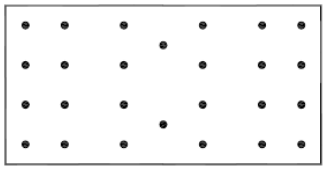

4'x8' PERIMETERS (26)

1 FASTENER PER EVERY 1.23 SQ. FT.

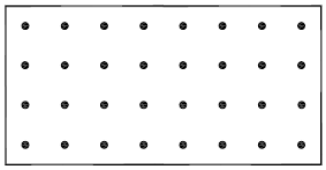

4'x8' CORNERS (32)

1 FASTENER PER EVERY 1 SQ. FT.

Factory Mutual Perimeter and Corner Enhancements

Since the wind uplift forces are greater in the perimeter and corner areas of a roof, additional membrane/insulation attachment is required in these areas. Factory Mutual defines these requirements in FM Loss Prevention Data Sheet 1-29. In summary, there are two basic methods to address this requirement.

1 Install a FM rated system that meets the wind uplift requirements of each roof area. For example, suppose the FM uplift requirements for your roof are Field = 60, Perimeter = 105, and Corner = 150. You could then:
   a. Locate the 3 FM systems (1-60, 1-105 & 1-150) and install them in their respective location on the roof.
   b. Install a 1-105 system in the Field and Perimeter areas and then install a 1-150 system in the corner areas.
   c. Install a 1-150 system over the entire roof area.

A second method to address the increased uplift pressures in perimeter and corner areas is to use 'Prescriptive Enhancement'. Prescriptive Enhancement allows you to mathematically determine the Perimeter and Corner attachment requirements, based upon the Field attachment rate.

Prescriptive Enhancement can only be used if the project meets one of the following requirements:

1. The building is in a non-hurricane prone region, Ground Roughness = C, the design wind speed does not exceed 90-mph and the roof height does not exceed 75 ft.

2. The building is in a non-hurricane prone region, Ground Roughness = D, the design wind speed does not exceed 90-mph and the roof height does not exceed 30 ft.

3. The Factory Mutual recommended field of roof rating does not exceed Class 1-75.

4. The building is in a non-hurricane prone region and the Factory Mutual recommended field of roof rating does not exceed Class 1-90.

If the project meets one of the above criteria, then Prescriptive Enhancement can be employed.

Roof Perimeter: Increase the Field of roof attachment pattern by 50%, rounding up to the next whole number. However, you must install a minimum of one fastener per every 2 square feet, but no more than 1 fastener per 1 square feet. (minimum of 16 fasteners per 4' x 8' board and maximum of 32 fasteners)

Roof Corner: Install one fastener per every square foot (32 fasteners per 4' x 8' board)

For example, if the field attachment rate is 1 fasteners per 4 square feet (8 fasteners per 4' x 8' board), then a 50% increase of the field rate would be 1 fastener per 2.666 square feet, or 12

fasteners per 4’ x8’ board. However, the minimum is 16. In the corners, the attachment is always 32.

Field attachment = 8 fasteners per 4’ x 8’ board
50% increase would be 12 fasteners, but the minimum requirement of 16 fasteners would prevail.
Perimeter attachment is then 16 fasteners per 4’ x 8’ board.
Corner attachment is 32 fasteners per 4’ x 8’ board as per definition.

Note: See attached details MHT-FM-724, MHT-FM-725, MHT-FM-726, and MHT-FM-727 for examples of Factory Mutual attachment patterns.

Any information given on this Technical Bulletin is subject to change without notice. Please visit our website at www.mulehide.com or contact the Mule-Hide Technical Department at (800-786-1492) for questions or additional information.

NOTES:

1. THESE FASTENING PATTERNS ARE TO BE USED WHEN THE PROJECT REQUIRES A FACTORY MUTUAL RATED SYSTEM. CONTACT MULE-HIDE TECHNICAL DEPARTMENT FOR APPROPRIATE USE OF THESE PATTERNS.
2. MULE-HIDE INSULATION FASTENERS AND 3" DIAMETER PLATES MUST BE USED FOR INSULATION ATTACHMENT.
3. REFER TO MULE-HIDE WIND UPLIFT RATINGS FOR APPROPRIATE FASTENER DENSITY REQUIRED.
4. FASTENER DENSITY INCREASES BASED ON THE FOLLOWING:
   - 50% FOR PERIMETERS WITH A MINIMUM OF 1 FASTENER EVERY 2 SQUARE FEET NOT TO EXCEED 1 FASTENER EVERY 1 SQUARE FEET
   - CONSTANT DENSITY OF 1 FASTENER EVERY 1 SQUARE FEET FOR CORNERS.

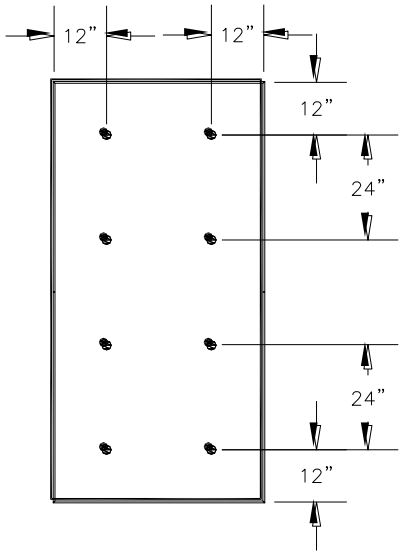

FIELD (8)
1 FASTENER PER EVERY 4 SQ. FT.

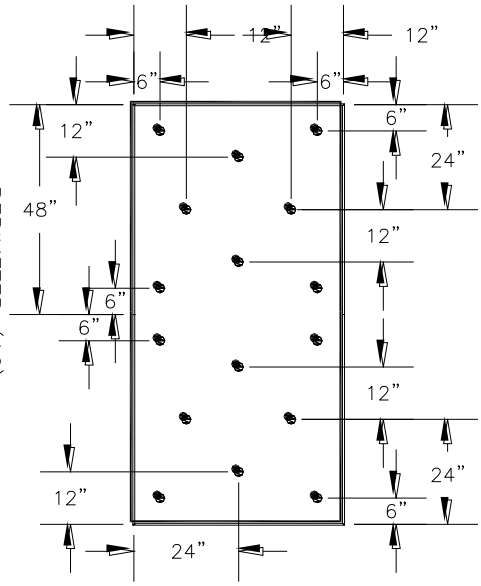

PERIMETER (16)
1 FASTENER PER EVERY 2 SQ. FT.

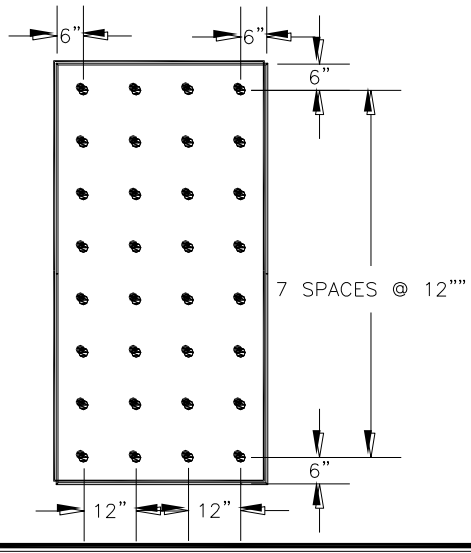

CORNERS (32)
1 FASTENER PER EVERY 1 SQ. FT.

MULE-HIDE PRODUCTS CO., INC.

FM - 8 FIELD FASTENERS PER 4' X 8' BOARD PATTERN LAYOUT

SYSTEMS:

FULLY ADHERED

DETAIL NO.:

MHT-FM-724

REVISION DATE: 10/2013

NOTES:

1. THESE FASTENING PATTERNS ARE TO BE USED WHEN THE PROJECT REQUIRES A FACTORY MUTUAL RATED SYSTEM. CONTACT MULE-HIDE TECHNICAL DEPARTMENT FOR APPROPRIATE USE OF THESE PATTERNS.
2. MULE-HIDE INSULATION FASTENERS AND 3" DIAMETER PLATES MUST BE USED FOR INSULATION ATTACHMENT.
3. REFFER TO MULE-HIDE WIND UPLIFT RATINGS FOR APPROPRIATE FASTENER DENSITY REQUIRED.
4. FASTENER DENSITY INCREASES BASED ON THE FOLLOWING:
   - 50% FOR PERIMETERS WITH A MINIMUM OF 1 FASTENER EVERY 2 SQUARE FEET NOT TO EXCEED 1 FASTENER EVERY 1 SQUARE FEET
   - CONSTANT DENSITY OF 1 FASTENER EVERY 1 SQUARE FEET FOR CORNERS.

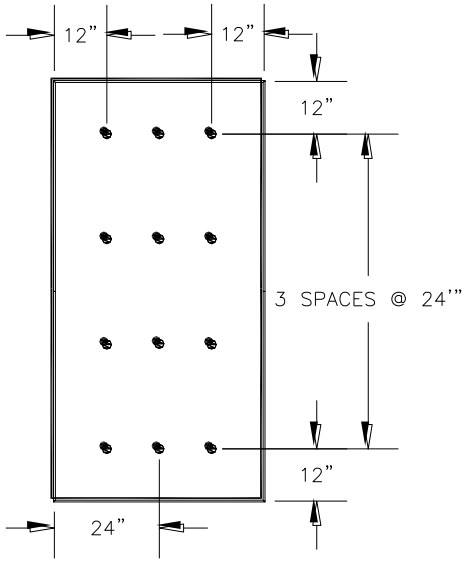

FIELD (12)
1 FASTENER PER EVERY 2.66 SQ. FT.

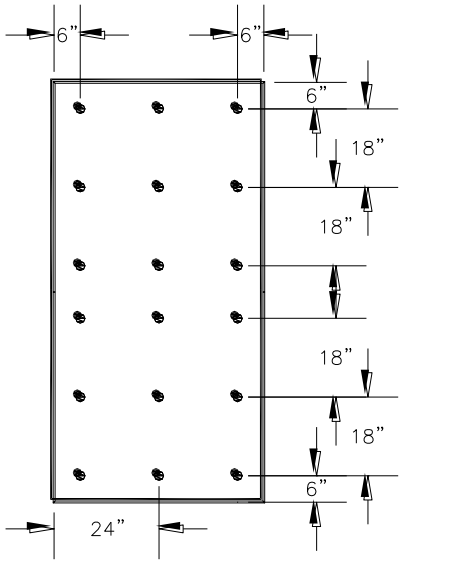

PERIMETER (18)
1 FASTENER PER EVERY 1.77 SQ. FT.

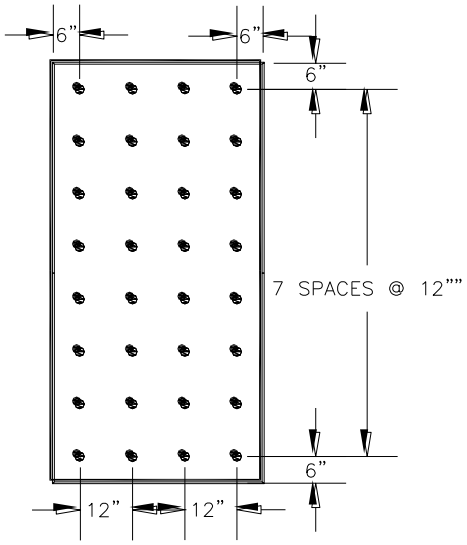

CORNERS (32)
1 FASTENER PER EVERY 1 SQ. FT.

MULE-HIDE PRODUCTS CO., INC.

FM - 12 FIELD FASTENERS PER 4' X 8' BOARD PATTERN LAYOUT SYSTEMS:

FULLY ADHERED

DETAIL NO.:

MHT-FM-725

REVISION DATE: 10/2013

NOTES:

1. THESE FASTENING PATTERNS ARE TO BE USED WHEN THE PROJECT REQUIRES A FACTORY MUTUAL RATED SYSTEM. CONTACT MULE-HIDE TECHNICAL DEPARTMENT FOR APPROPRIATE USE OF THESE PATTERNS.
2. MULE-HIDE INSULATION FASTENERS AND 3" DIAMETER PLATES MUST BE USED FOR INSULATION ATTACHMENT.
3. REFER TO MULE-HIDE WIND UPLIFT RATINGS FOR APPROPRIATE FASTENER DENSITY REQUIRED.
4. FASTENER DENSITY INCREASES BASED ON THE FOLLOWING:
   - 50% FOR PERIMETERS WITH A MINIMUM OF 1 FASTENER EVERY 2 SQUARE FEET NOT TO EXCEED 1 FASTENER EVERY 1 SQUARE FEET
   - CONSTANT DENSITY OF 1 FASTENER EVERY 1 SQUARE FEET FOR CORNERS.

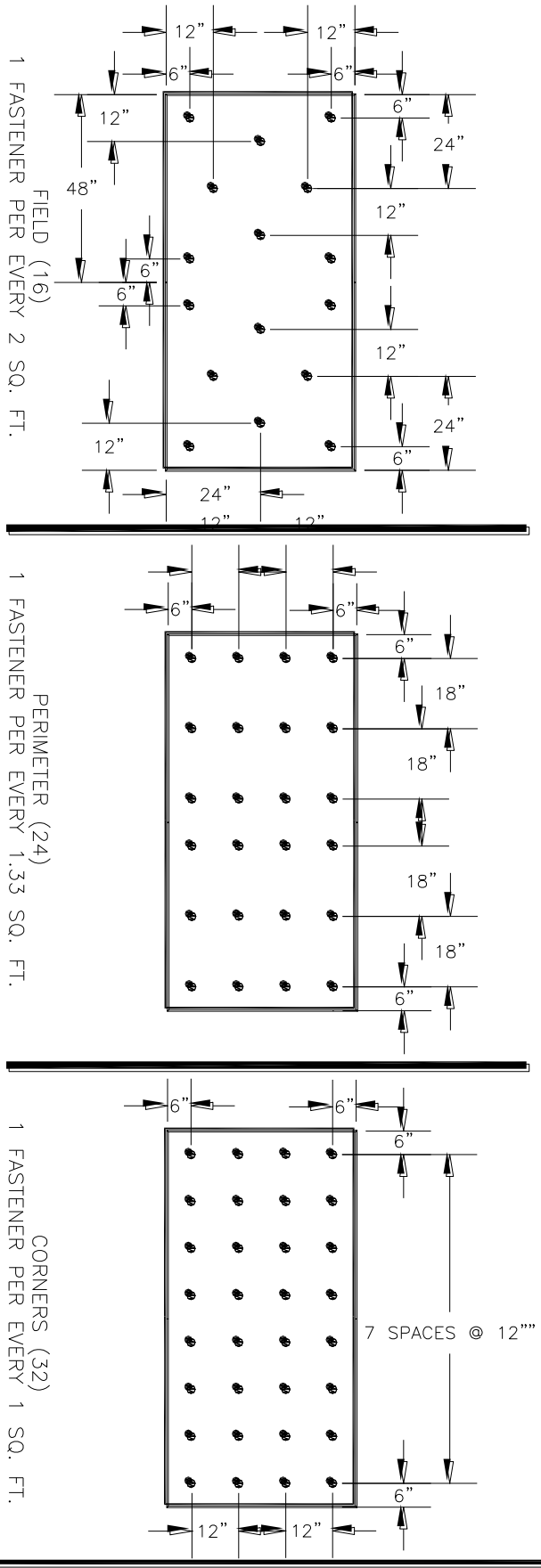

MULE-HIDE PRODUCTS CO., INC.

FM - 16 FIELD FASTENERS PER 4' X 8' BOARD PATTERN LAYOUT

SYSTEMS:

FULLY ADHERED

DETAIL NO.: **MHT-FM-726**

REVISION DATE: 10/2013

NOTES:

1. THESE FASTENING PATTERNS ARE TO BE USED WHEN THE PROJECT REQUIRES A FACTORY MUTUAL RATED SYSTEM. CONTACT MULE-HIDE TECHNICAL DEPARTMENT FOR APPROPRIATE USE OF THESE PATTERNS.
2. MULE-HIDE INSULATION FASTENERS AND 3" DIAMETER PLATES MUST BE USED FOR INSULATION ATTACHMENT.
3. REFER TO MULE-HIDE WIND UPLIFT RATINGS FOR APPROPRIATE FASTENER DENSITY REQUIRED.
4. FASTENER DENSITY INCREASES BASED ON THE FOLLOWING:
   - 50% FOR PERIMETERS WITH A MINIMUM OF 1 FASTENER EVERY 2 SQUARE FEET NOT TO EXCEED 1 FASTENER EVERY 1 SQUARE FEET
   - CONSTANT DENSITY OF 1 FASTENER EVERY 1 SQUARE FEET FOR CORNERS.

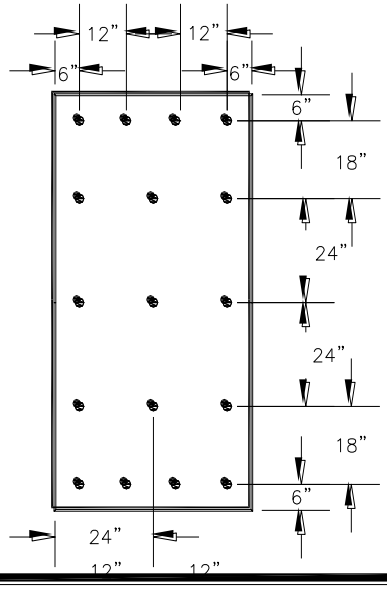

FIELD (17)
1 FASTENER PER EVERY 1.88 SQ. FT.

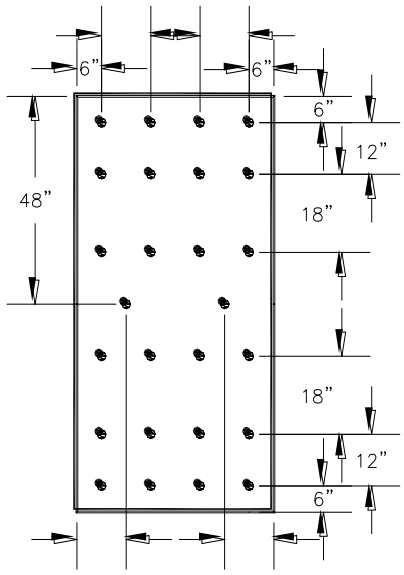

PERIMETER (26)
1 FASTENER PER EVERY 1.23 SQ. FT.

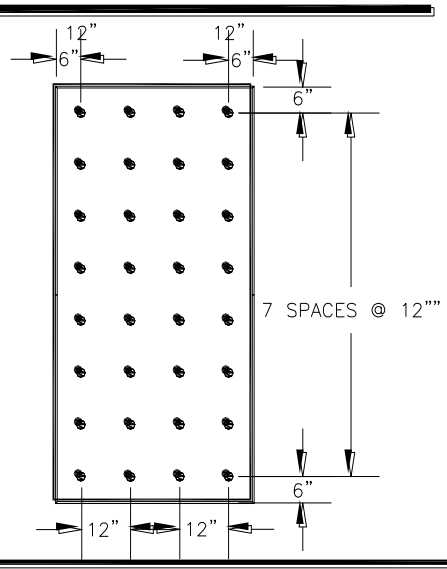

CORNERS (32)
1 FASTENER PER EVERY 1 SQ. FT.

MULE-HIDE PRODUCTS CO., INC.

FM - 17 FIELD FASTENERS PER 4' X 8' BOARD PATTERN LAYOUT SYSTEMS:

FULLY ADHERED

DETAIL NO.:

MHT-FM-727

REVISION DATE: 10/2013

Technical Bulletin

No. 1001

Attaching flashings to pre-painted metal

June 16, 2010

Most pre-finished metal surfaces are very slick and difficult to adhere to. The best results are obtained when the top (mating) surface of the pre-painted metal is abraded or scuffed up. This can be accomplished using a hand drill with a wire wheel, or by using steel wool.

The proper steps for bonding to pre-finished metal are as follows:

1. Verify that the metal is properly secured in place.
2. Abrade or scuff up the area to be bonded. *Caution* - Do not abrade the metal surface beyond the area to be bonded. Leaving abraded surfaces exposed to the elements may result in premature aging.
3. Prime the surface to be bonded (Tape primers for Single-Ply membranes, ASTM D-41 Asphalt primer for SAMB membranes and asphalt products.
4. Bond the membrane to the primed surface following an approved Mule-Hide Detail.

Please visit our website at www.mulehide.com or contact Mule-Hide Products at (608) 365-3111 for questions or additional information.

Mule-Hide Products Co., Inc. National Support Center | 1195 Prince Hall Drive, Beloit, WI 53511-5481 | tel. 608.365.3111 | fax. 608.365.7852

Technical Bulletin

No. 1002

TPO 20-year warranty Requirements
Use of Cover Tape to strip in flanges of perimeter sheet metal.

Aug 10, 2010

Mule-Hide TPO Cover Tape and EPDM Cured Cover Tape may now be used on 20-Year TPO 'Standard' and 'Premium' Roof Warranties. Use is limited to covering flanges of perimeter sheet metal.

Please see attached details for use:

MHT-UN-106B when using TPO Cover Tape

MHT-UN-106C when using EPDM Cured Cover Tape.

This change will allow pre-finished edge metal to be more easily incorporated in to a 20-year TPO warranted system.

Notes:
Extended wind speed warranties may require the use of TPO coated metal and heat welded stripping.

Please visit our website at www.mulehide.com or contact Mule-Hide Products at (608) 365-3111 for questions or additional information.

NOTES:

1. CLEAN THE EXISTING MEMBRANE (AND METAL IF APPLICABLE) WITH WEATHERED MEMBRANE CLEANER. PRIME THE MEMBRANE USING TAPE PRIMER. ONCE THE PRIMER IS PROPERLY DRIED, THE TPO PRESSURE–SENSITIVE COVER STRIP IS APPLIED AND ROLLED USING A 2" WIDE ROLLER.

2. WOOD NAILER MUST EXTEND PAST TOTAL WIDTH OF METAL FASCIA DECK FLANGE.

3. FASTENERS AND FASTENER PATTERN AS RECOMMENDED BY METAL EDGE MANUFACTURER.

4. DECK FLANGE MUST BE TOTALLY COVERED BY TPO PRESSURE–SENSITIVE COVER STRIP WITH MINIMUM 2" COVERAGE PAST NAIL HEADS.

5. APPLY MULE–HIDE UNIVERSAL SINGLE PLY SEALANT ALONG BOTH EDGES OF TPO COVER TAPE AND ACROSS ENDLAPS.

HEAT COVER STRIP AT SPLICE INTERSECTIONS PRIOR TO ROLLING TO CONFORM TO STEP–OFFS

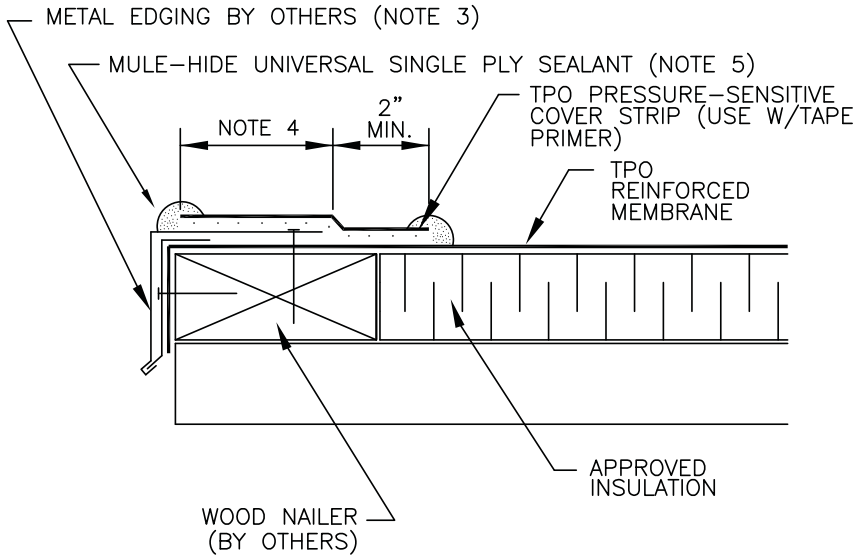

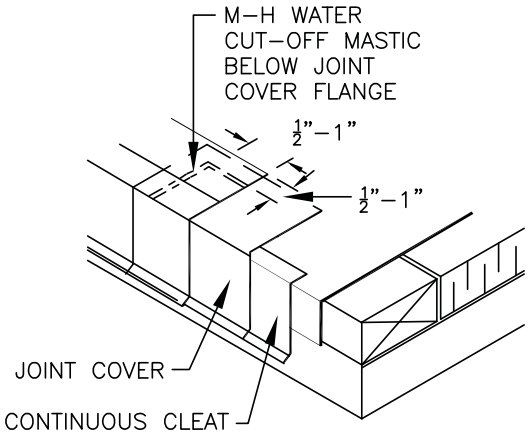

NOTE:

THIS DETAIL IS ACCEPTABLE FOR USE IN A 20–YEAR WARRANTED SYSTEM

IF SHEETMETAL IS TO BE INCLUDED IN THE WARRANTY, CONTRACTOR MUST USE MULE–HIDE METAL PRODUCTS. REFER TO DETAILS MHT–3120, MHE–3120, MHT–3550, OR MHT–3555

MULE-HIDE PRODUCTS CO., INC.	**DRIP EDGE** **TPO P/S COVER STRIP** **SYSTEMS:** **ALL TPO SYSTEMS**	**DETAIL NO.:** **MHT-UN-106B** REVISION DATE: 10/2013

®

NOTES:

1. CLEAN THE EXISTING MEMBRANE (AND METAL IF APPLICABLE) WITH WEATHERED MEMBRANE CLEANER. PRIME THE MEMBRANE USING TAPE PRIMER. ONCE THE PRIMER IS PROPERLY DRIED, THE WHITE EPDM CURED COVER STRIP IS APPLIED AND ROLLED USING A 2" WIDE ROLLER.

2. WOOD NAILER MUST EXTEND PAST TOTAL WIDTH OF METAL FASCIA DECK FLANGE.

3. FASTENERS AND FASTENER PATTERN AS RECOMMENDED BY METAL EDGE MANUFACTURER.

4. DECK FLANGE MUST BE TOTALLY COVERED BY WHITE EPDM CURED COVER STRIP WITH MINIMUM 2" COVERAGE PAST NAIL HEADS.

5. APPLY MULE-HIDE UNIVERSAL SINGLE PLY SEALANT ALONG BOTH EDGES OF WHITE EPDM CURED COVER TAPE AND ACROSS END LAPS.

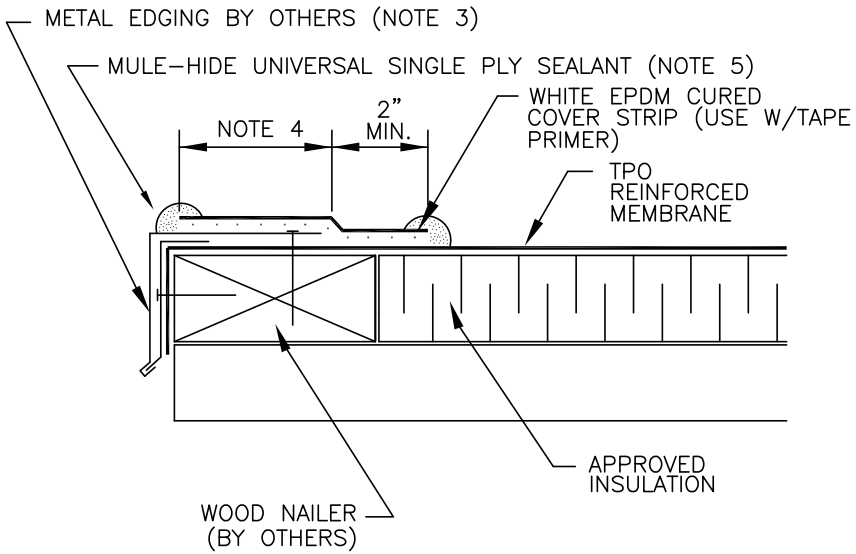

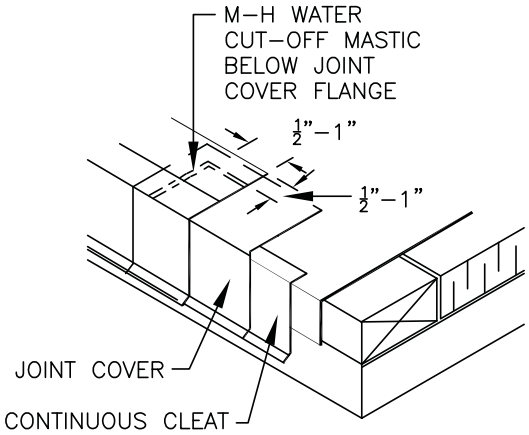

NOTE:

THIS DETAIL IS ACCEPTABLE FOR USE IN A 20-YEAR WARRANTED SYSTEM

IF SHEETMETAL IS TO BE INCLUDED IN THE WARRANTY, CONTRACTOR MUST USE MULE-HIDE METAL PRODUCTS. REFER TO DETAILS MHT-3120, MHE-3120, MHT-3550, OR MHT-3555

MULE-HIDE PRODUCTS CO., INC.	**DRIP EDGE** **WHITE EPDM CURED COVER TAPE** **SYSTEMS:** **ALL TPO SYSTEMS**	**DETAIL NO.:** **MHT-UN-106C** REVISION DATE: 10/2013

®

Technical Bulletin
No. 1003

Use of Pactiv GreenGuard Roof Insulation In Mule-Hide Roofing Systems

October 22, 2010

Pactiv offers several roof insulations that may be used in Mule-Hide roofing systems. The Pactiv insulation is an extruded polystyrene product and care must be taken when using this material over coal tar pitch. The following is a brief summary of how these insulations may be utilized in a Mule-Hide system.

Insulation	**Sizes**
PB6 Series	Supplied as fanfold bundles, 4' x 50', 3/8" thick
PB38 Series	Supplied as 4' x 8' sheets, 3/8" thick

Warranties – Pactiv insulations may be used for Standard 10, 15, or 20 year warranties when following our guidelines and Pactiv recommendations. (Not for use with Mule-Hide Premium Warranties)

Ballasted Systems

Membrane	Insulation	Installation
EPDM TPO	PB6, PB6FA or PB6FA90	Loosely laid in place*
	PB38, PB38FA or PB38FA90	
PVC	NONE	Ballasting not permitted

*Note: Insulation may be spot attached with adhesive to facilitate installation. Mechanical attachment of insulation is not allowed under a ballasted system.

Mechanically Attached Systems

Membrane	**Insulation**	**Attachment** (Min fasteners required) (4)
TPO(1) (Light Colored)	PB6, PB6FA or PB6FA90	**2** per 2' x 4' panel – FM pattern - Fig 2
	PB38, PB38FA or PB38FA90	**4** per 4' x 8' board – FM pattern – Fig 1
EPDM(2) (Dark Colored)	PB6, PB6FA or PB6FA90	**3** per 2' x 4' panel – FM pattern – Fig 4
	PB38, PB38FA or PB38FA90	**8** per 4' x 8' board – FM pattern – Fig 3
PVC(3) (Light Colored)	PB6W	**2** per 2' x 4' panel – FM pattern - Fig 2

(1) TPO (White, Tan, Gray)
(2) Reinforced EPDM
(3) PVC (White, Tan, Gray)
(4) See fastening patterns attached to this Tech Bulletin.

Fully Adhered Systems
Pactiv FA and FA90 products have a special facer that allows certain membranes to be adhered to them.

Insulation	Uplift[5] (MDP)	Insulation Attachment			
		Field	Perimeter	Corner	Detail[6]
PB6FA – fanfold	FM 1-60	4 per 2' x 4'	6 per 2' x 4'	8 per 2' x 4'	Fig 5
PB38FA – 4' x 8'	(-30 psf)	16 per 4' x 8'	24 per 4' x 8'	32 per 4' x 8'	MHFM-216
PB6FA90 - fanfold	FM 1-90	3 per 2' x 4'	5 per 2' x 4'	8 per 2' x 4'	Fig 6
PB38FA90 – 4' x 8'	(-45 psf)	12 per 4' x 8'	18 per 4' x 8'	32 per 4' x 8'	MHFM-212

(5) The maximum attainable wind classification under the ANSI/FM 4474 Appendix C test procedure. ANSI/FM 4474, associated FM Loss Prevention Data Sheets and building codes require a 2 to 1 margin of safety be applied to the windstorm classification for comparison to roof cladding design pressures. The maximum design pressures associated with these assemblies are:
FM 1-90 = -45 psf (maximum design pressure)
FM 1-60 = -30 psf (maximum design pressure)

(6) See fastening patterns attached to this Tech Bulletin.

Membrane	Adhesives
EPDM	Solvent Based Bonding Adhesive Low VOC Bonding Adhesive (**Not** for use with Acrylic Water Based Bonding Adhesive) [7]
TPO	TPO Bonding Adhesive Low VOC Bonding Adhesive (**Not** for use with WBBA-2000 Adhesive) [7]
PVC	**Not** approved at this time

(7) These adhesives have not been tested with Pactiv Insulation.

Follow GreenGuard application instructions, available at www.green-guard.com

Always check with local code bodies to ensure that this assembly meets local building code requirements. Not for use in high wind uplift areas. Contact Mule-Hide Technical Department for additional information.

Any information given on this Technical Bulletin is subject to change without notice. Please visit our website at www.mulehide.com or contact Mule-Hide Products at (608) 365-3111 for questions or additional information.

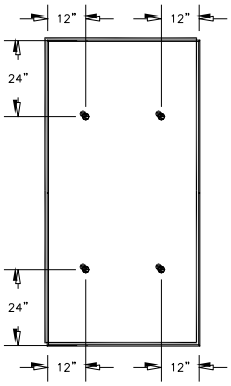

FIGURE 1
4' X 8' INSULATION BOARDS

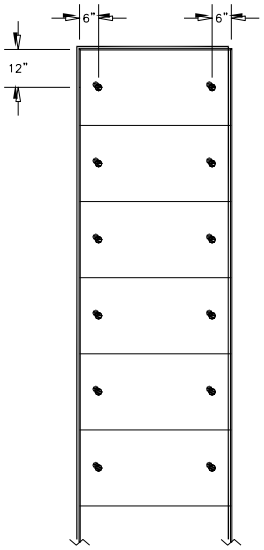

FIGURE 2
4' X 50' FANFOLD INSULATION

FASTENING PATTERN FOR GREENGARD® ROOFING RECOVERY BOARDS USED UNDER MECHANICALLY ATTACHED LIGHT–COLORED ROOF MEMBRANES

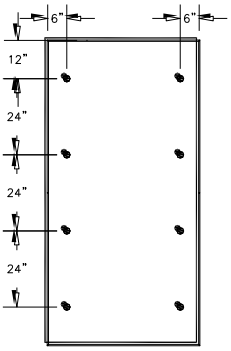

FIGURE 3
4' X 8' INSULATION BOARDS

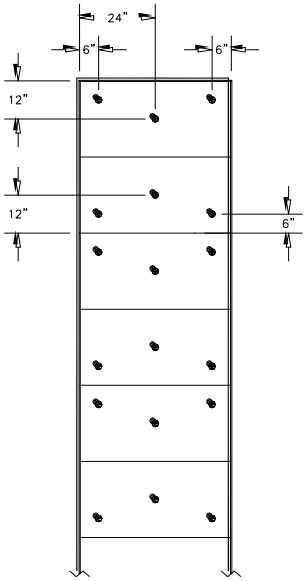

FIGURE 4
4' X 50' FANFOLD INSULATION

FASTENING PATTERN FOR GREENGARD® ROOFING RECOVERY BOARDS USED UNDER MECHANICALLY ATTACHED DARK–COLORED ROOF MEMBRANES

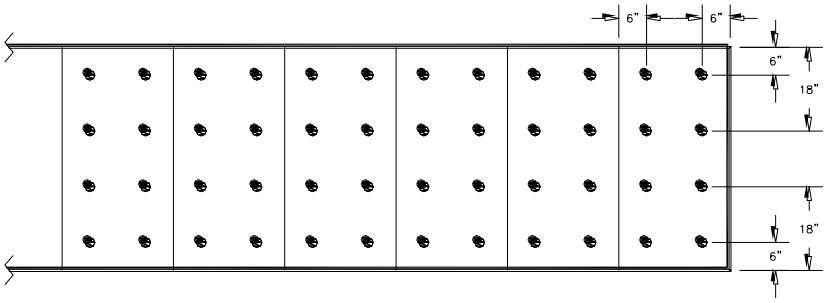

CORNERS

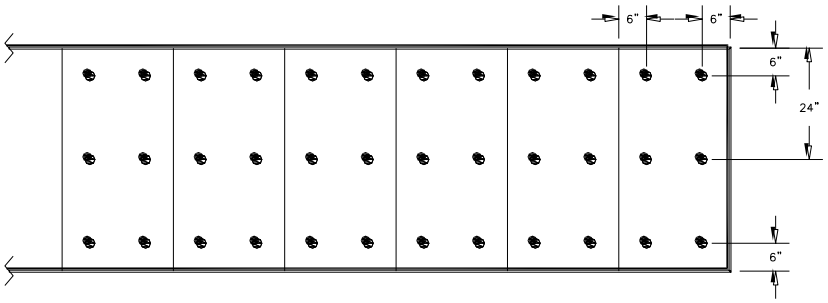

PERIMETERS

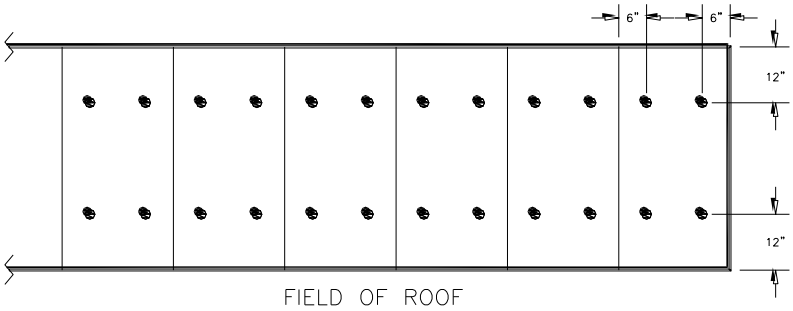

FIELD OF ROOF

FIGURE 5
4' X 50' PB6FA FANFOLD INSULATION

FASTENING PATTERN FOR GREENGARD® PB6FA ROOFING RECOVERY BOARDS USED UNDER FULLY ADHERED ROOF MEMBRANES TO ACHEIVE FM I-60

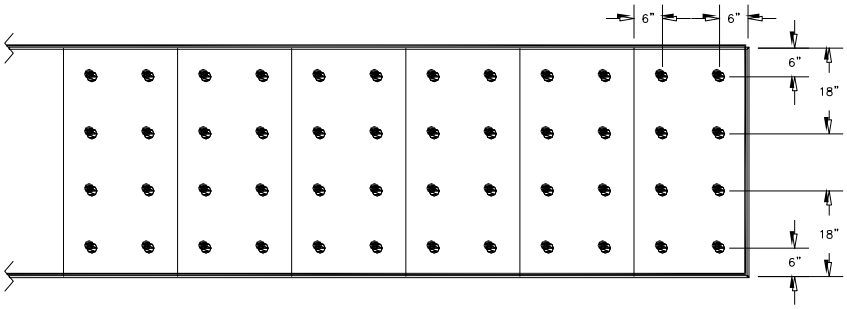

CORNERS

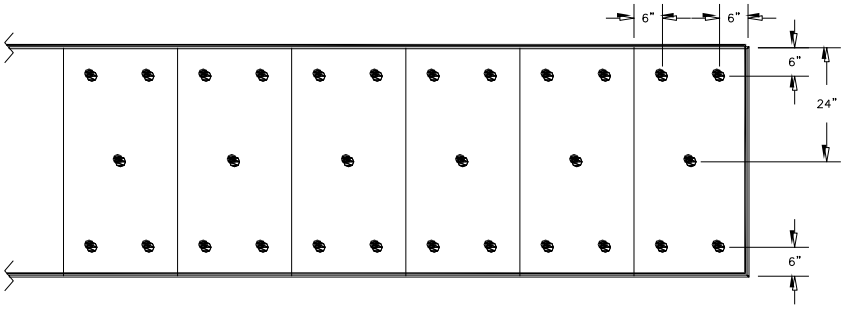

PERIMETERS

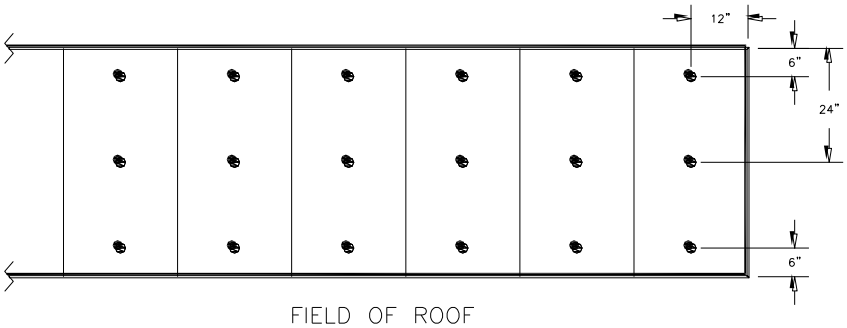

FIELD OF ROOF

FIGURE 6
4' X 50' PB6FA90 FANFOLD INSULATION

FASTENING PATTERN FOR GREENGARD® PB6FA90 ROOFING RECOVERY BOARDS USED UNDER FULLY ADHERED ROOF MEMBRANES TO ACHEIVE FM I-90

NOTES:

1. 12 FASTENERS PER 4' X 8' BOARD IN THE FIELD IS APPROVED FOR 1–1/2" TO 2" THICK POLYISOCYANURATE INSULATIONS WHEN USED AS THE TOP LAYER OR ¼" DENS DECK INSTALLED AS A COVER BOARD.

2. PERIMETER AND CORNER DIMENSIONS ARE TO BE A MINIMUM OF 8' WIDE UNLESS THE PROJECT REQUIRES FACTORY MUTUAL COMPLIANCE. CONTACT MULE–HIDE TECHNICAL DEPARTMENT FOR FACTORY MUTUAL REQUIREMENTS.

3. MULE–HIDE FASTENERS AND 3" STRESS PLATES MUST BE USED FOR INSULATION ATTACHMENT.

4. REFER TO MULE–HIDE WIND UPLIFT RATINGS FOR APPROPRIATE FASTENER DENSITY REQUIRED.

5. FASTENER DENSITY INCREASES BASED ON THE FOLLOWING:
   - 50% FOR PERIMETERS
   - 100% FOR CORNERS

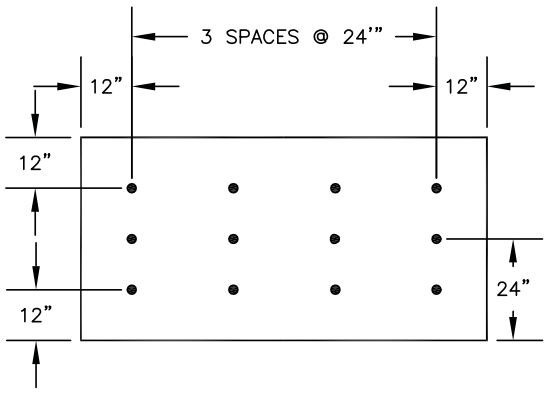

FIELD (12)
1 FASTENER PER EVERY 2.66 SQ. FT.

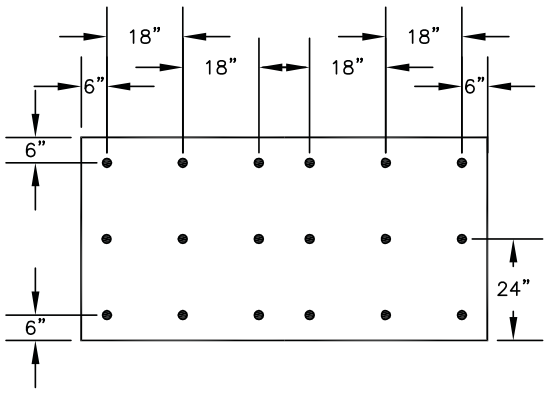

PERIMETER (18)
1 FASTENER PER EVERY 1.77 SQ. FT.

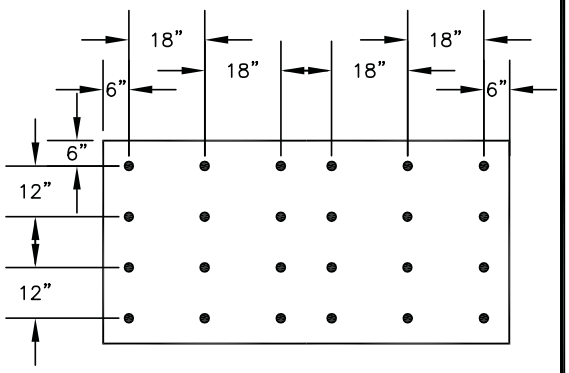

CORNERS (24)
1 FASTENER PER EVERY 1.33 SQ. FT.

MULE-HIDE PRODUCTS CO., INC.	**INSULATION ATTACHMENT** **12 FASTENERS PER 4' X 8' IN FIELD** **SYSTEMS:** **FULLY ADHERED**	**DETAIL NO.:** **MHT-FA-721** REVISION DATE: 10/2013

®

NOTES:

1. 16 FASTENERS PER 4' X 8' BOARD IN THE FIELD IS MULE-HIDE'S STANDARD FOR FULLY ADHERED TPO ROOFING SYSTEMS.

2. PERIMETER AND CORNER DIMENSIONS ARE TO BE A MINIMUM OF 8' WIDE UNLESS THE PROJECT REQUIRES FACTORY MUTUAL COMPLIANCE. CONTACT MULE-HIDE TECHNICAL DEPARTMENT FOR FACTORY MUTUAL REQUIREMENTS.

3. MULE-HIDE FASTENERS AND 3" STRESS PLATES MUST BE USED FOR INSULATION ATTACHMENT.

4. REFER TO MULE-HIDE WIND UPLIFT RATINGS FOR APPROPRIATE FASTENER DENSITY REQUIRED.

5. FASTENER DENSITY INCREASES BASED ON THE FOLLOWING:
   - 50% FOR PERIMETERS
   - 100% FOR CORNERS

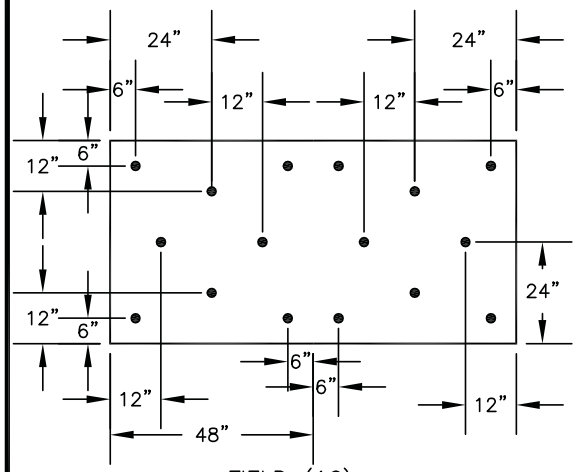

FIELD (16)
1 FASTENER PER EVERY 2 SQ. FT.

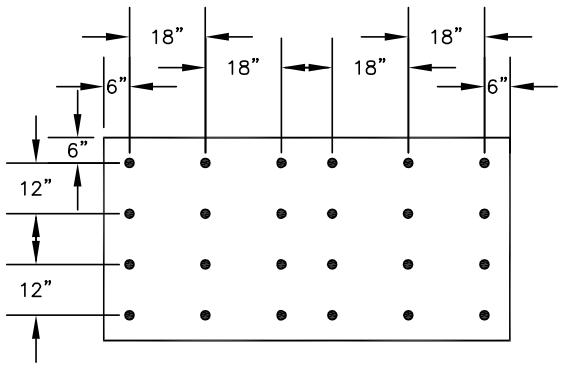

PERIMETER (24)
1 FASTENER PER EVERY 1.33 SQ. FT.

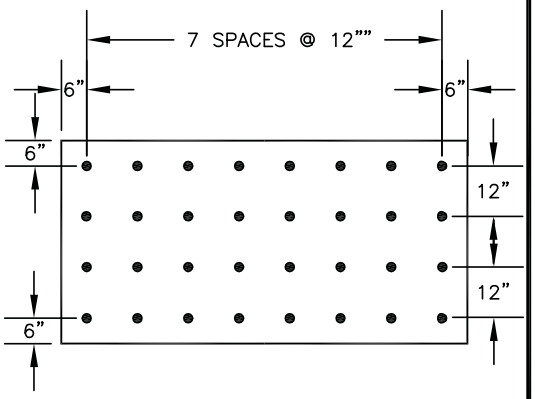

CORNERS (32)
1 FASTENER PER EVERY 1 SQ. FT.

MULE-HIDE PRODUCTS CO., INC.	**INSULATION ATTACHMENT 16 FASTENERS PER 4' X 8' IN FIELD** **SYSTEMS:** **FULLY ADHERED**	**DETAIL NO.:** **MHT-FA-722** REVISION DATE: 10/2013

®

Technical Bulletin
No. 1101

Mule-Hide Membranes and Adhesives - Cold Weather Installation

Revised Oct-2014

During periods of cold weather, special storage and application methods must be used to facilitate the installation of our roofing materials. For best results, roofing materials should be stored between 60ºF and 80ºF prior to application. As the products cool and the properties and application deteriorate, restore products to room temperature.

Listed below are some tips for installing single ply membranes during periods of cold weather (40ºF or less). As a rule, roofing materials become stiffer and more difficult to work with as temperatures decrease. Proper storage and installation of all your roofing materials is crucial to the successful outcome of your project.

EPDM – EPDM membrane is available in large sheet sizes that are folded. During periods of cold weather, these folded sheets are more difficult to relax and install. Mule-Hide recommends the use of smaller, non-folded sheets for installation during cold weather. Allow extra time for the sheet to relax during colder weather.

EPDM flashing products may require supplemental warming from a heat gun. Be careful to keep the heat gun away from flammable materials such as cleaners, tape primers and adhesives.

TPO & PVC – Remove the outer wrapping and un-roll the membrane. Flip the membrane over so that the back side is up, facing the sunlight. This will allow the darker, back side of the membrane to absorb warmth from the sun while relaxing. Only un-wrap as much material as will be used during that day. Allow extra time for the sheet to relax.

Welding techniques and parameters must also be adjusted for cold weather applications. In general, welding speeds need to be decreased. It is imperative that test welds be conducted at start up and after the automatic welder has been shut down to assure that a proper weld is being made. It is also important to conduct test welds with hand welders also, due to the slower speeds needed to affect a proper weld.

SAMB (Self Adhering Modified Bitumen) - In order to perform properly, Mule-Hide SAMB materials require a minimum application temperature of 40°F and rising for 48 continuous hours. This applies to the roofing materials and approved substrate. During installation, the membrane must be promptly rolled with a minimum 75# roller. Failure to abide by these requirements may result in poor adhesion or cracking issues. During periods of colder weather, the Mule-Hide SAMB materials should always be stored at room temperature (60° to 80° F) until just prior to use. Materials that are not stored at room temperature (or not used within 4 hours) should be restored to room temperature prior to use.

Adhesives & Sealants

Acrylic Water Based Bonding Adhesive, WBBA-2000 & HydroBond

Water based adhesives must not be allowed to freeze either during storage or application. These adhesives must be stored in original unopened containers at temperatures between 60ºF and 90ºF prior to application. In general, these products should be installed when temperatures are 45ºF and above and must not be allowed to freeze within a minimum of 48 hours of application. Once subjected to freezing temperatures the product will not perform and must be disposed off. Consult the appropriate Product Data Sheets for specific information on the adhesive being installed.

Mule-Hide Bonding Adhesive (EPDM), Mule-Hide TPO Bonding Adhesive, Mule-Hide PVC Bonding Adhesive, Low-VOC Bonding Adhesive, Low-VOC PVC Bonding Adhesive, Low-VOC Bonding Adhesive 1168 (CA only)

Solvent based adhesive and sealants must be stored in original unopened containers at temperatures between 60ºF and 90ºF for 24 hours prior to use. Storage at temperatures over 90ºF may alter product shelf life. Mix product thoroughly until all settled pigments are dispersed and adhesive is uniform in color. Mule-Hide recommends a minimum of 5 minutes of stirring with a variable speed drill and mixing paddle. Products stored at cold temperatures and then restored to room temperatures may experience separation of solvents. Always remix products thoroughly prior to use.

Working in low temperatures will also result in longer drying times for solvent based products. Failure to allow the products to properly flash off will result in solvent blistering of the membrane. To determine when the adhesive or primer has flashed off, form a fist and press your knuckles into the surface and give your wrist a quarter turn and lift. If surface is tacky but does not string, the surfaces are ready to mate together.

In addition to extended drying times, there is an increased likelihood of condensation forming on the surface of the adhesive. If condensation forms, the surfaces cannot be mated and work must stop until conditions improve. Wait until conditions improve and allow the adhesive to dry completely. Make sure the surface is completely dry before reapplying another coat of adhesive or primer.

Low-VOC Adhesives - Opened containers of Low-VOC adhesives must be used within 48 hours. Stir adhesive occasionally while using. Adhesive will begin to thicken after this point, making it difficult to control applied thickness. In hot weather, do not leave sealed containers on roof for prolonged periods of time. In cold weather, keep material at room temperature until ready to use.

Coverage rates are average and will vary based on job site conditions. Porous or slightly rough surfaces may require the use of a prime coat followed by a finish coat of adhesive. The performance of the roofing system will be diminished if proper amounts of adhesive are not applied.

Any information given on this Technical Bulletin is subject to change without notice. Please visit our website at www.mulehide.com or contact Mule-Hide Products at (608) 365-3111 for questions or additional information.

Technical Bulletin
No. 1301

Mule-Hide edge metal requirements for warranted projects

February 11, 2013

Sheet metal not covered by warranty
Sheet metal by others – Sheet metal that is provided by others is not covered under our Mule-Hide warranties, and cannot be used on projects that require extended wind speed coverage.

Sheet metal covered by warranty[3]
Mule-Hide coated metal (TPO & PVC) – Mule-Hide coated metal that is properly formed (by others) and installed according to our published details, may be covered under our system warranties, but cannot be used for projects that require extended wind speed coverage.

Sheet metal covered by warranty and eligible for extended wind speed coverage[3]
Mule-Hide pre-manufactured Edge Metal – Mule-Hide pre-manufactured Edge Metal that is properly installed according to our details, is covered under our Mule-Hide System Warranties and is to be used for projects that require extended wind speed coverage.

Description	Warranted	Extended Wind Speed
Sheet Metal by Others	No	No
Mule-Hide Coated Metal	Yes[1,3]	No
Mule-Hide pre-manufactured Edge Metal	Yes[3]	Yes[2,3]

Notes:
1. Mule-Hide Coated Metal must be properly formed (by others) and installed according to our published details.
2. Contact the Mule-Hide Technical Department for information regarding the availability of extended wind speed coverage, appropriate products and specific system requirements.
3. Rain carrying sheet metal such as collector heads, gutters, downspouts and accessories are explicitly excluded from any warranty coverage.

Any information given on this Technical Bulletin is subject to change without notice. Please visit our website at www.mulehide.com for the most current information or contact the Mule-Hide Technical Department at (800) 786-1492 for questions or additional information.

Mule-Hide Products Co., Inc. National Support Center | 1195 Prince Hall Drive, Beloit, WI 53511-5481 | tel. 608.365.3111 | fax. 608.365.7852

Technical Bulletin
No. 1302

Use of InsulFoam Roof Insulation In Mule-Hide Roofing Systems

September 2013

InsulFoam roof insulations may be used in Mule-Hide roofing systems and will qualify for a Premium warranty if purchased from Mule-Hide. The InsulFoam products include Expanded and Extruded Polystyrene insulations and care must be taken when using these materials over coal tar pitch. The following is a brief summary of how these insulations may be utilized in a Mule-Hide system.

Warranties – InsulFoam insulations may be used for either Standard or Premium, 10, 15, or 20 year warranties when following Mule-Hide guidelines and InsulFoam recommendations. Must provide proof of purchase (copy of the distributor's invoice showing Mule-Hide SKU numbers) when applying for a Premium Warranty.

Fully Adhered – All fully adhered systems require the use of an approved cover board.

Mechanically Attached

TPO

1. Minimum 1.25 density InsulFoam
2. R-Tech insulation or fanfold with polymeric facer side up

PVC

1. Minimum 1.25 density InsulFoam with slip sheet or cover board
2. R-Tech insulation or fanfold with polymeric facer side up

EPDM

1. Cover board required over InsulFoam
2. R-Tech insulation or fanfold with polymeric facer side up

Ballasted

TPO & EPDM

1. Minimum 1.00 density InsulFoam*
2. R-Tech insulation or fanfold with polymeric facer side up*
   *cover board recommended for high traffic areas

PVC Ballasting not permitted with PVC membranes

Notes:

1. Local building codes must be consulted for the acceptance of installing polystyrene insulations directly over metal decking.
2. Polystyrene insulation cannot be installed directly over coal-tar pitch surfaces or existing PVC membranes. For coal-tar pitch, a min 1-½" thick layer of insulation with a min R value of 5 is required as separation.
3. PVC membranes require separator sheets between the PVC membranes and polystyrene products unless using R-Tech board with polymeric facer side up.

Mule-Hide Products Co., Inc. National Support Center | 1195 Prince Hall Drive, Beloit, WI 53511-5481 | tel. 608.365.3111 | fax. 608.365.7852

Insulation Attachment

Fully Adhered Systems **–** Attachment will vary depending upon type and thickness of cover board, type of roof deck and wind uplift requirements. Contact the Mule-Hide Technical Department for acceptable attachment patterns.

Mechanically Attached Systems

4' x 4' boards – Secure with four fasteners per board
4' x 8' boards – Secure with eight fasteners per board

FanFold – Attach with two fasteners at each end panel and then install one fastener at every other panel (see drawing)

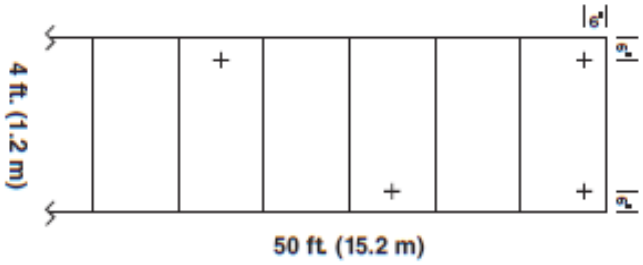

Any information given on this Technical Bulletin is subject to change without notice. Please visit our website at www.mulehide.com for the most current information or contact the Mule-Hide Technical Department at (800) 786-1492 for questions or additional information.

Mule-Hide Products Co., Inc. National Support Center | 1195 Prince Hall Drive, Beloit, WI 53511-5481 | tel. 608.365.3111 | fax. 608.365.7852

Technical Bulletin

No. 1303

Use of Structodek High Density Fiberboard Insulation Cover Board with Primed Red Coating In Mule-Hide Roofing Systems

October 2013

The use of Structodek HD with Primed Red Coating high density wood fiberboard, as manufactured by Blue Ridge Fiberboard, Inc., is approved for use in Mule-Hide warranted roofing systems using either EPDM, TPO & PVC single ply roofing membranes or our self-adhering modified bitumen membranes.

This product is coated two-sides with a red primer that is compatible with all of our single ply adhesives (solvent and water based) as well as our self-adhering modified bitumen membranes.

Structodek HD is to be installed in a conventional manner using either fasteners or insulation adhesives. Attachment rates will vary depending upon project requirements.

Attached is a copy of the data sheet for the Structodek HD board for reference.

Any information given on this Technical Bulletin is subject to change without notice. Please visit our website at www.mulehide.com for the most current information or contact the Mule-Hide Technical Department at (800) 786-1492 for questions or additional information.

Mule-Hide Products Co., Inc. National Support Center | 1195 Prince Hall Drive, Beloit, WI 53511-5481 | tel. 608.365.3111 | fax. 608.365.7852

CELOTEX
BLUE RIDGE™
FIBERBOARD

STRUCTODEK® HIGH DENSITY

FIBERBOARD ROOF INSULATION
COVER BOARD WITH PRIMED RED COATING

DESCRIPTION

The proprietary, patent pending, non-asphaltic Primed Red Coating integrated on the surface of STRUCTODEK HD possesses unique bonding characteristics that ultimately result in superior adhesion capabilities with the current membrane & adhesive technology on the market today. The non-asphaltic Primed Red Coating is compatible with all single-ply membranes including PVC, TPO, EPDM, and CSPE without concern of premature membrane degradation that is often associated with asphalt emulsion coated fiberboard products. Additionally the Primed Red Coating, unlike asphalt emulsion coated products, has proven to be compatible with traditional, low VOC and water-based adhesives as well as many foam adhesives. The Primed Red Coating allows adhesives & foams to "key" into the STRUCTODEK HD surface while at the same time deterring excessive adhesive absorption. The unique Primed Red Coating allows for a solid membrane bond while still providing optimal square foot per gallon of adhesive coverage thus insuring a quality & cost effective membrane installation.

While STRUCTODEK HD with Primed Red Coating was designed with the single-ply application in mind it contains many of the same great attributes as STRUCTODEK HD with the traditional non-asphaltic black coating. Accordingly it also works well with asphaltic based systems (BUR), coal tar, and cold-process adhesive products. Additionally, STRUCTODEK HD with Primed Red Coating has also been successful in peel-and-stick applications without the typical need for an additional primer in many instances. The rigid and strong, yet lightweight nature of STRUCTODEK HD with Primed Red Coating is better than heavier alternatives and will keep the roof load below the specified maximum weight. Structodek HD with Primed Red Coating is offered coated on 2 sides and available in 4'x4' and 4'x8' panels.

USES

STRUCTODEK HD with Primed Red Coating can be used as an insulation board, cover board, or re-roof/recover board. The product is a high-density roofing board designed for low-slope single-ply, as well as traditional roof system applications.

SPECIFICATIONS

- ASTM C 208, Type II, Grade 1 and Grade 2
- CAN/ULC-S706-09 Type II, Classes 1 and 2
- UL Classified to Canadian Std CAN/ULC-S107 and US Std UL 790
- FM Approved Class 1 – FM Approval Standard 4450/4470
- Canadian Evaluation CCMC #13186-L
- NOA 10-0120.04; Miami-Dade County, FL; Expiration date 09/18/13

MASTERFORMAT NUMBER AND TITLE

07 22 16 - Roof Board Insulation

FEATURES/BENEFITS

- Compatible with PVC, TPO, EPDM, CSPE single-ply membranes as well as more traditional systems.
- Compatible with most low VOC, water-based and traditional adhesives.
- Superior adhesion without excess adhesive absorption.
- Compatible with most direct peel-and-stick applications.
- BUR compatible - easily handles hot asphalt.
- Approved in thousands of FM RoofNav® & UL Class A rated roof system assemblies.
- Green, non-asphaltic coating – contributes to LEED credits.
- Hail resistant, structurally rigid, easily handles heavy foot traffic and wheeled loads.
- Possesses SOUNDSTOP® sound deadening technology.
- Contributes to thermal insulation with R-values of 1.3 per ½".
- Lightweight, fiberglass free, cuts with a standard utility knife.
- Compressive strength exceeds the Canadian standard at 10% deformation for ½" thickness.
- Coated 2 sides Primed Red provides optimal surface bonding characteristics ideal for use in single and multiple layer roof systems.
- Waxes & other moisture resistant components are added early in the manufacturing process providing superior core and edge protection. The integral moisture resistant components protect the edges in stock panel size (4'x4' or 4'x8') and, more importantly, also protects the edges when the product is cut on the jobsite.
- Cost effective solution- a value engineered champion.

PRECAUTIONS

Do not expose to open flame or excessive heat. May smoulder if ignited. If ignited, extinguish completely. Do not apply flame directly to material when installing a modified bitumen system. Material must be kept dry at all times; in storage and during application. Apply only as much STRUCTODEK HD with Primed Red Coating in one day as can be covered by completed roofing system that day. Do not use as an underlayment for shingles. In re-roofing applications, all wet areas in old roof should be cut out and replaced. Before material is installed, remove all loose and protruding gravel. STRUCTODEK HD with Primed Red Coating must not be used in close proximity to chimneys, heater units, fireplaces, steam pipes, or other surfaces which could provide long-term exposure to excessive heat (maximum 212◦ F) without adequate thermal protection. Consult appropriate heating appliance manufacturer's instructions before installation.

LEED INFORMATION

May help contribute to LEED credits:

- MR Credit 2: Construction Waste Management
- MR Credit 4: Recycled Content
- MR Credit 5: Regional Materials
- MR Credit 6: Rapidly Renewable Materials
- IEQ Credit 4.4: Low-Emitting Materials – Composite Wood and Agrifiber Products

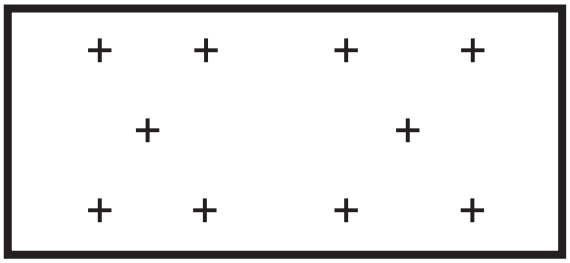

10 FASTS/BD.

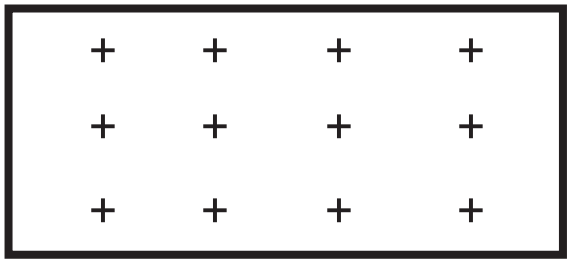

12 FASTS/BD.

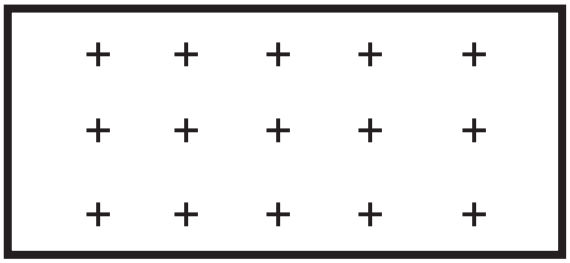

15 FASTS/BD.

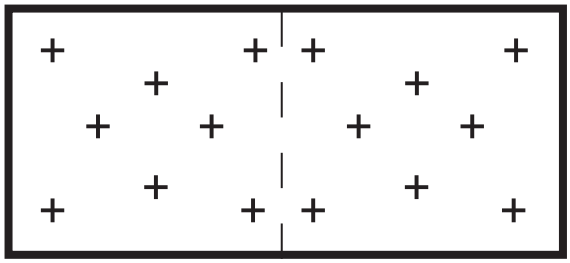

16 FASTS/BD.

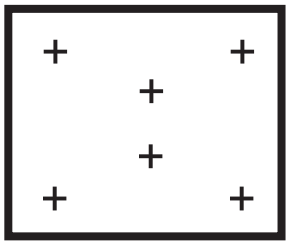

6 FASTS/BD.

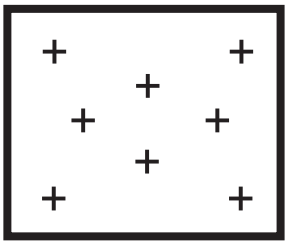

8 FASTS/BD.

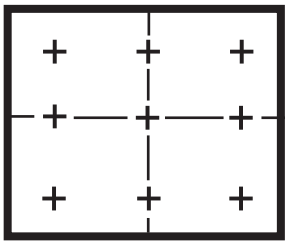

9 FASTS/BD.

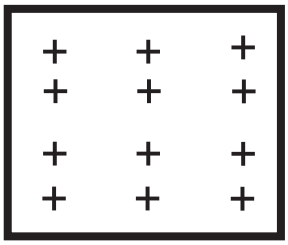

12 FASTS/BD.

Typical FM fastening patterns for 1-60 & 1-90. Actual fastening patterns will vary based upon specific membrane manufacturer's FM system assembly, please refer to membrane manufactures specific fastening requirements as listed in FM's RoofNav system.

Limited Warranty: BLUE RIDGE FIBERBOARD, INC. warrants at the time and place we make shipment, our material will be of good quality and will confirm with our published specifications in force on the date of acceptance of the order. Read complete warranty. Copy furnished upon request.

Disclaimer: The information contained herein is included for illustrative purpose only, and to the best of our knowledge, is accurate and reliable. BLUE RIDE FIBERBOARD, INC. cannot however under any circumstance make any guarantee of results or assume any obligation or liability in connection with the use of this information. As BLUE RIDGE FIBERBOARD, INC. has no control over the use to which others may put its product, it is recommended that the products be tested to determine if suitable for specific application and/or our information is valid in a particular circumstance. Responsibility remains with the architect or engineer, contractor and owner for the design, application and proper installation of each product. Specifier and user shall determine the suitability of products for specific application and assume all responsibilities in connection therewith.

JULY 2013

Technical Bulletin
No. 1304

Revised LTTR Values
For
Polyisocyanurate Roof insulation
(Long Term Thermal Resistance)

October 2013

On January 1, 2014 a new test method for predicting Long Term Thermal R (LTTR) values for Polyisocyanurate roofing products will go into effect. The net effect is that the published LTTR values for polyiso roof insulation will be decreased. All other physical properties will remain the same. The new test method is an attempt to predict the R value of polyiso after 15 years of use.

Q: What is the effective date of the changes?
A: The new test method goes into effect January 1, 2014.

Q: Will any other physical properties change?
A: No. This is merely a different method of determining the LTTR of the product.

Q: Will all Polyiso products and manufacturers be affected?
A: This change will affect all polyiso material and all manufacturers who are members of PIMA.

Q: Does this mean that all Polyiso LTTR values will decrease?
A: Yes, based on the new test method, LTTR values will go down.

Q: How do I price a project that will ship in 2014?
A: If the quote is based on R value then the new LTTR values should be used. Note that the NRCA recommends that designers specify Polyiso by thickness. If the quote is based on thickness then no change is needed.

Q: What if I have already quoted a project for 2014?
A: You should ask to be re-quoted if the quote was based on R value.

Q: How will this affect tapered polyiso insulation?
A: These R values will also decrease beginning in 2014.

Q: What if I have a project that shipped in 2013 and now needs additional material?
A: You should clarify with the designer whether or not they wish to have the new material quoted based on the 2014 LTTR values. Keep in mind that the thickness will change.

Q: What do I do with existing inventory?
A: Inventory purchased prior to January 1, 2014 can be sold with the 2013 R-Values displayed. For instance, if you have bundles of 1.5” ISO with a 2013 label, they can be sold as meeting the 2014 LTTR of 8.5 for 1.5” ISO.

Q: How do the new R Values compare to the present ones?
A: Please see R value comparison on next page.

Mule-Hide Products Co., Inc. National Support Center | 1195 Prince Hall Drive, Beloit, WI 53511-5481 | tel. 608.365.3111 | fax. 608.365.7852

Nominal Thickness*** (Inches)	(mm)	**Poly ISO 1** 2013 LTTR*	2014 LTTR**	Metal Deck Max. Flute Spanability (Inches)
1.0	25	6.0	5.6	2 ⅝
1.5	38	9.0	8.5	4 ⅜
1.6	41	9.6	9.1	4 ⅜
1.7	43	10.3	9.6	4 ⅜
2.0	51	12.1	11.4	4 ⅜
2.5	64	15.3	14.4	4 ⅜
2.7	69	16.6	15.6	4 ⅜
3.0	76	18.5	17.4	4 ⅜
3.3	84	20.4	19.2	4 ⅜
3.5	89	21.7	20.5	4 ⅜
3.6	91	22.4	21.1	4 ⅜
4.0	102	25.0	23.6	4 ⅜

*Long Term Thermal Resistance Values are based on ASTM C1289 and CAN/ULC S770 which provides for a 15-year time weighted average.
**LTTR (Long Term Thermal Resistance) determined in accordance with *updated* 2014 ASTM C1289 Standard.
***Other thicknesses available upon special request.

Nominal Thickness*** (Inches)	(mm)	**Poly ISO 2™** 2013 LTTR*	2014 LTTR**	Metal Deck Max. Flute Spanability (Inches)
1.0	25.4	6.0	5.6	2 ⅝
1.5	38.1	9.0	8.5	4 ⅜
2.0	50.8	12.1	11.4	4 ⅜
2.5	63.5	15.3	14.4	4 ⅜
3.0	76.2	18.5	17.4	4 ⅜
3.1	78.8	19.1	18.0	4 ⅜
3.3	83.8	20.4	19.2	4 ⅜
4.0	101.6	25.0	23.6	4 ⅜

*LTTR (Long Term Thermal Resistance) values were determined in accordance with CAN/ULC-S770 and ASTM C1289, Annex A1. All test samples were third-party selected and tested by an accredited material testing laboratory. The LTTR results were reviewed and authorized by FM Approvals and certified by the PIMA Quality Mark Program.
**LTTR (Long Term Thermal Resistance) determined in accordance with *updated* 2014 ASTM C1289 Standard.
***Other thicknesses available upon special request.

Any information given on this Technical Bulletin is subject to change without notice. Please visit our website at www.mulehide.com for the most current information or contact the Mule-Hide Technical Department at (800) 786-1492 for questions or additional information.

Mule-Hide Products Co., Inc. National Support Center | 1195 Prince Hall Drive, Beloit, WI 53511-5481 | tel. 608.365.3111 | fax. 608.365.7852

SECTION 8

MULE-HIDE PRODUCTS CO., INC.

TPO STANDARD DETAILS

PLEASE CONSULT THE MULE-HIDE WEBSITE FOR THE MOST CURRENT INFORMATION AT WWW.MULEHIDE.COM

MULE-HIDE PRODUCTS CO., INC.
TPO STANDARD DETAILS

TABLE OF CONTENTS

* = Approved for 20-year warranties

MULE-HIDE PRODUCTS CO., INC.
TPO STANDARD DETAILS

TABLE OF CONTENTS

PLEASE CONSULT THE MULE-HIDE WEBSITE FOR THE MOST CURRENT INFORMATION AT WWW.MULEHIDE.COM

* = Approved for 20-year warranties

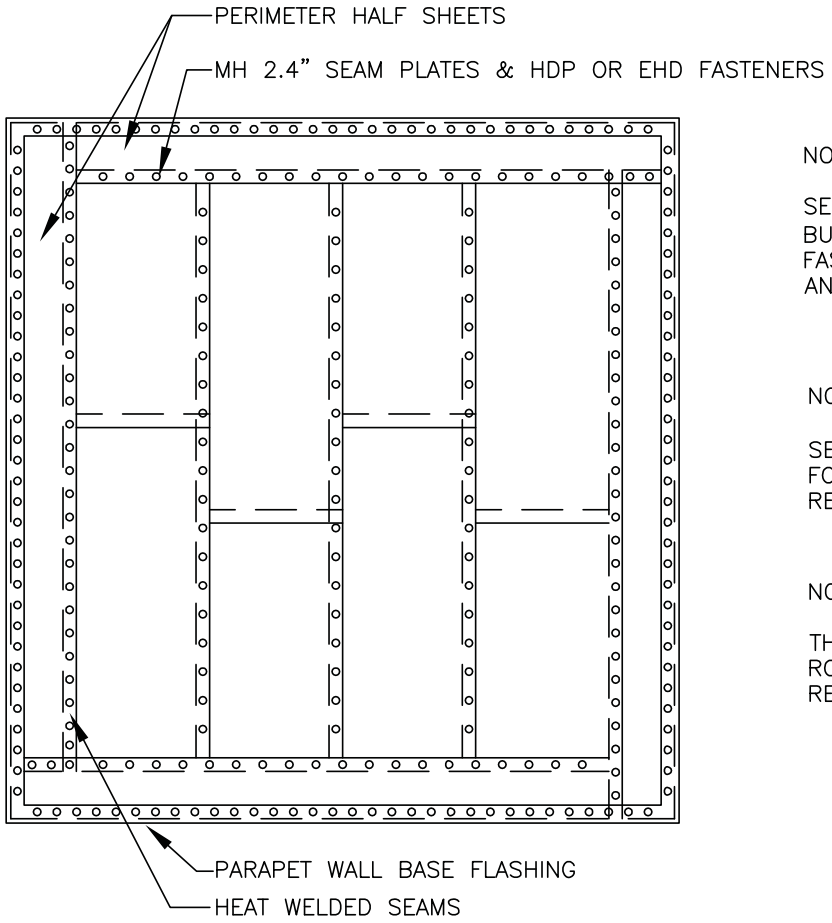

NOTE:

SEE TPO MEMBRANE FASTENING TECHNICAL BULLETIN #TPO–MA01–2006 FOR APPROPRIATE FASTENER SPACING FOR VARIOUS DECK TYPES AND WIND UPLIFT REQUIREMENTS.

NOTE:

SEE TECHNICAL BULLETIN #TPO–MA02–2006 FOR PERIMETER ENHANCEMENT REQUIREMENTS.

NOTE:

THIS DETAIL IS NOT APPROVED OVER STEEL ROOF DECKS. FOR STEEL ROOF DECKS, REFER TO DETAILS MHT–FM–308A OR B,

MULE-HIDE PRODUCTS CO., INC.	**FIELD MEMBRANE LAYOUT PERIMETER HALF SHEET OPTION**	**DETAIL NO.:**
	SYSTEMS:	**MHT-MA-101A**
	MECHANICALLY ATTACHED	REVISION DATE: 10/2013

®

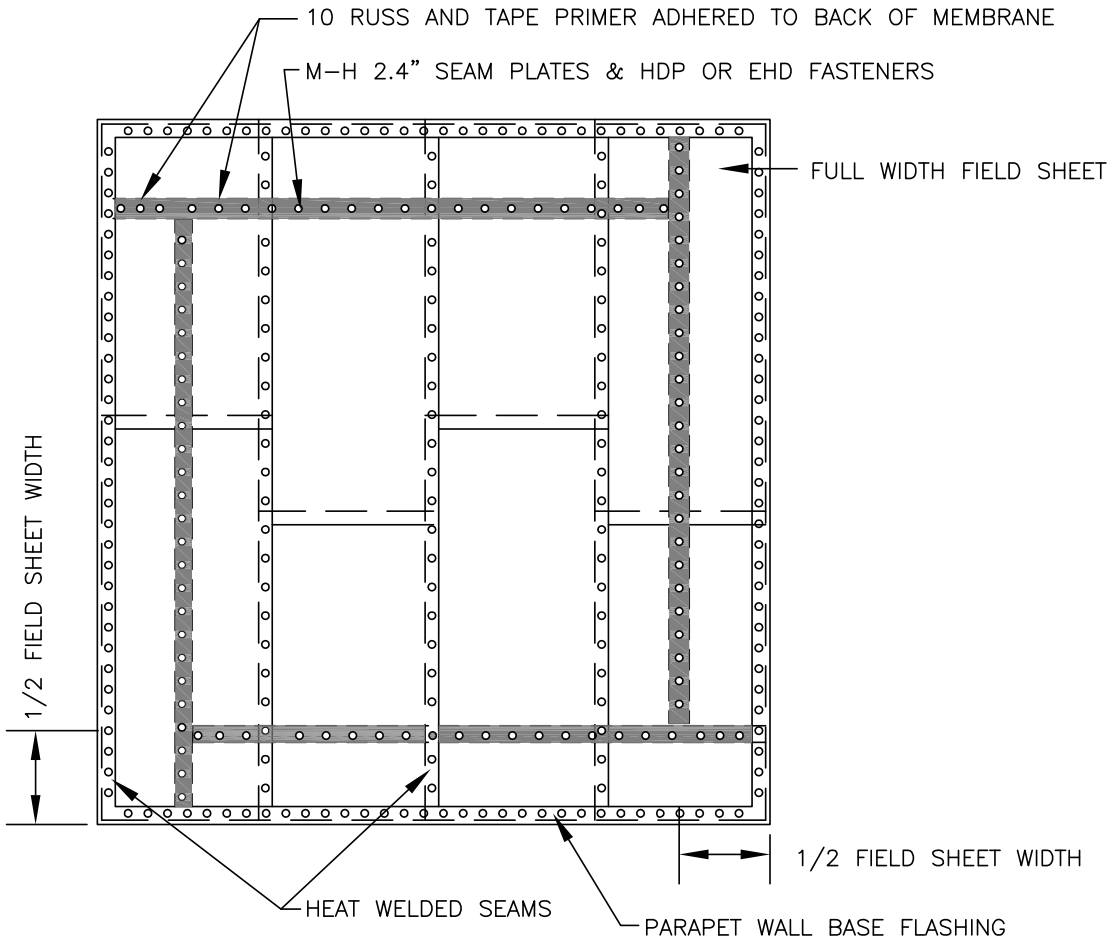

NOTE:

SEE TPO MEMBRANE FASTENING TECHNICAL BULLETIN #TPO–MA01–2006 FOR APPROPRIATE FASTENER SPACING FOR VARIOUS DECK TYPES AND WIND UPLIFT REQUIREMENTS.

SEE TECHNICAL BULLETIN #TPO–MA02–2006 FOR PERIMETER ENHANCEMENT REQUIREMENTS.

NOTE:

RUSS PRODUCTS CANNOT BE USED ON FLEECEBACK OR SELF ADHERING MEMBRANES

NOTE:

THIS DETAIL IS NOT APPROVED OVER STEEL ROOF DECKS. FOR STEEL ROOF DECKS, REFER TO DETAIL MHT–FM–308A.

MULE-HIDE PRODUCTS CO., INC.	**PERIMETER SECUREMENT 10" RUSS STRIP**	**DETAIL NO.:**
	SYSTEMS:	**MHT-MA-101B**
	MECHANICALLY ATTACHED	REVISION DATE: 10/2013

®

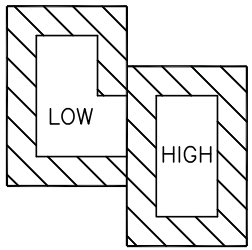

PERIMETER AREA

ROOF HEIGHT DIFFERENTIAL GREATER THAN 3'

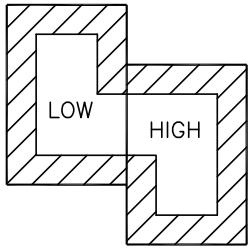

PERIMETER AREA

ROOF HEIGHT DIFFERENTIAL LESS THAN 3'

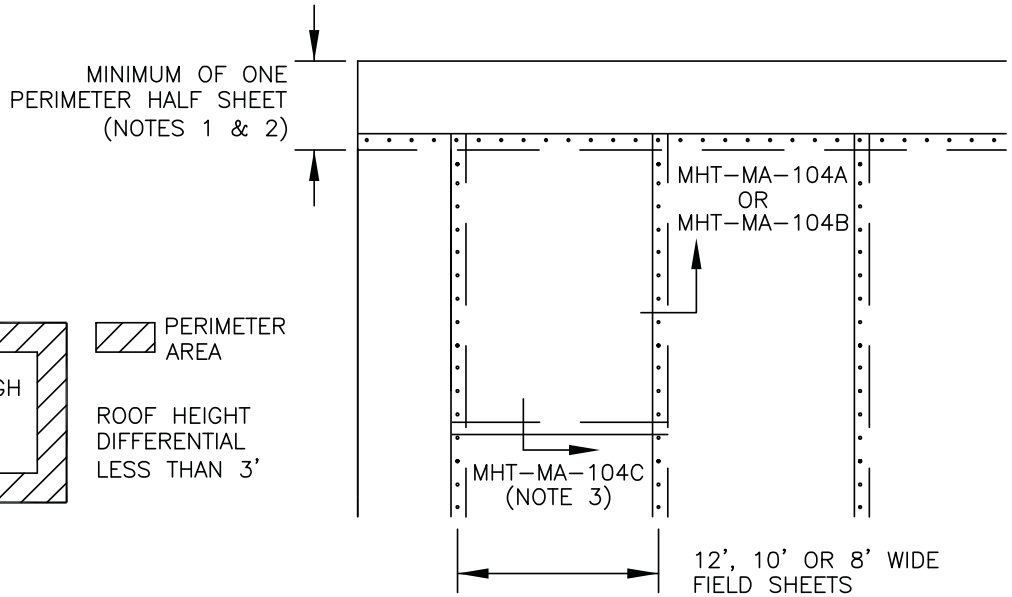

NOTES:

1. REFER TO MULE–HIDE TECHNICAL BULLETIN #TPO–MA02–2006 FOR MINIMUM PERIMETER ENHANCEMENT REQUIREMENTS.
2. CONTACT MULE–HIDE FOR FM OR CODE COMPLIANCE FOR REQUIRED NUMBER OF PERIMETER HALF SHEETS AND MEMBRANE FASTENING.
3. SECUREMENT NOT REQUIRED AT END LAPS; OVERLAP MEMBRANE 2" TO 3". REFER TO DETAIL MHT–UN–104C.
4. FOR INSULATION SECUREMENT, REFER TO MHT–MA–700 AND MHT–MA–701 DETAILS.
5. IF A FACTORY MUTUAL RATING IS REQUIRED, CONTACT MULE–HIDE TECHNICAL DEPARTMENT FOR CORNER REQUIREMENTS.
6. THIS OPTION IS NOT TO BE USED ON STEEL DECKS. REFER TO DETAIL MHT–FM–108A.

MULE-HIDE PRODUCTS CO., INC.	**PERIMETER ATTACHMENT OPTION 1 - PERIMETER HALF SHEETS**	**DETAIL NO.:**
	SYSTEMS:	**MHT-MA-102A**
	MECHANICALLY ATTACHED	REVISION DATE: 10/2013

®

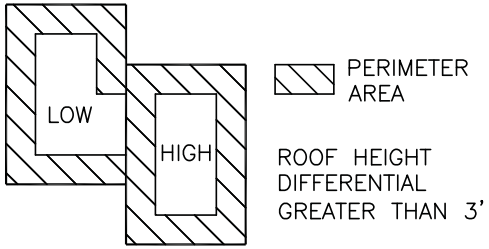

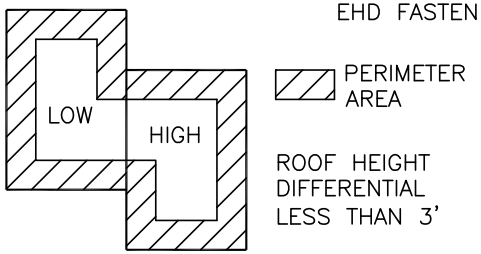

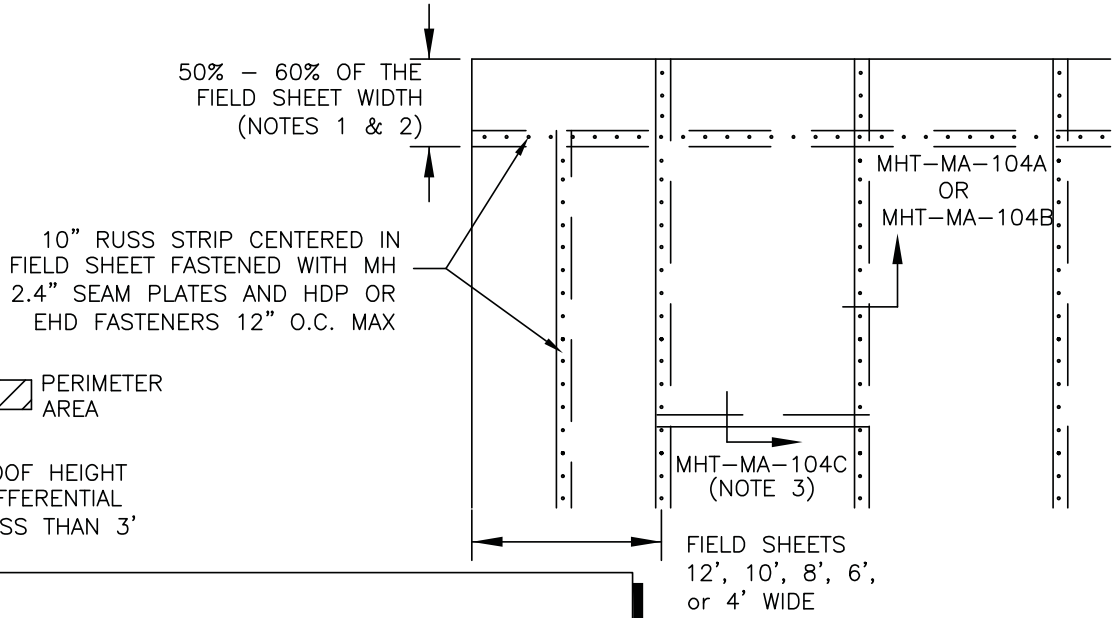

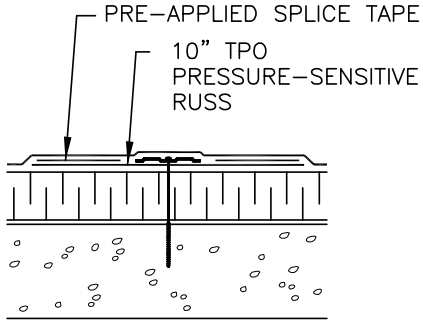

NOTES:

1. PLACE 10" RUSS STRIP IN CENTER OF FIELD SHEET. REFER TO TECHNICAL BULLETIN #MA–02–2006 FOR PERIMETER ENHANCEMENT REQUIREMENTS.
2. CONTACT MULE–HIDE FOR FM OR CODE COMPLIANCE FOR REQUIRED NUMBER OF 10" RUSS STRIPS AND MEMBRANE FASTENING.
3. SECUREMENT NOT REQUIRED AT END LAPS; OVERLAP MEMBRANE 2" TO 3". REFER TO DETAIL MHT–UN–104C.
4. FOR INSULATION SECUREMENT, REFER TO MHT–MA–700 AND MHT–MA–701 DETAILS.
5. IF A FACTORY MUTUAL RATING IS REQUIRED, CONTACT MULE–HIDE TECHNICAL DEPARTMENT FOR CORNER REQUIREMENTS.
6. RUSS PRODUCTS CANNOT BE USED WITH FLEECEBACK OR SELF ADHERING MEMBRANES.
7. THIS OPTION IS NOT TO BE USED ON STEEL DECKS. REFER TO DETAIL MHT–FM–108A.

MULE-HIDE PRODUCTS CO., INC.	**PERIMETER ATTACHMENT - OPTION 2** **10" RUSS STRIP ALTERNATE** **SYSTEMS:** **MECHANICALLY ATTACHED**	**DETAIL NO.:** **MHT-MA-102B** REVISION DATE: 10/2013

®

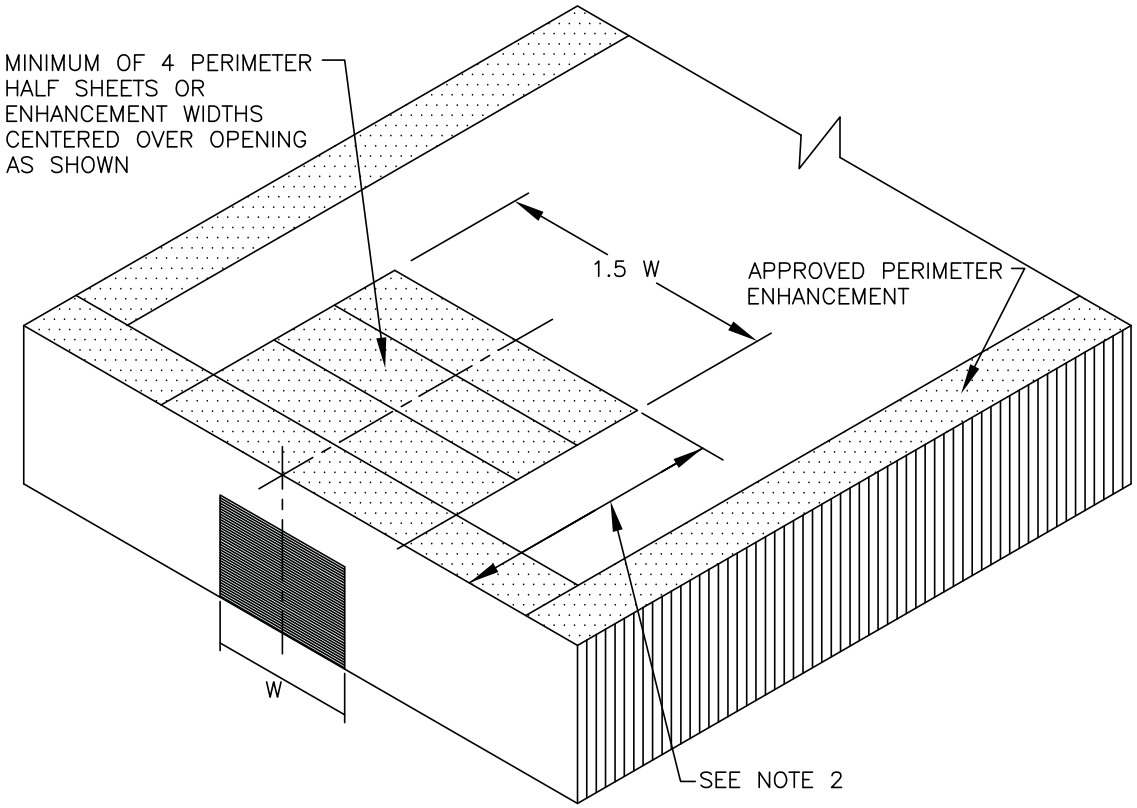

NOTES:

1. WHEN ANY WALL CONTAINS MAJOR OPENINGS WITH A COMBINED AREA WHICH EXCEEDS 10% OF THE TOTAL WALL AREA ON WHICH THE OPENINGS ARE LOCATED, A MINIMUM OF 4 PERIMETER HALF SHEETS OR ENHANCEMENT WIDTHS MUST BE CENTERED OVER THE OPENING.

2. THE DEPTH OF THE PERIMETER ENHANCEMENT MUST BE A MINIMUM OF 2.5 TIMES THE WIDTH OF THE OPENING OR 4 PERIMETER HALF SHEETS/ENHANCEMENT WIDTHS, WHICHEVER IS LARGER.

3. AS AN OPTION, AN ADHERED MEMBRANE SECTION MAY BE USED IN LIEU OF THE MECHANICALLY FASTENED MEMBRANE AT LARGE OPENINGS IN ACCORDANCE WITH THE MULE–HIDE FULLY ADHERED TPO ROOF YSTEM SPECIFICATION.

4. REFER TO TECHNICAL BULLETIN #TPO–MA02–2006 FOR PERIMETER ENHANCEMENT REQUIREMENTS.

MULE-HIDE PRODUCTS CO., INC.	**SHEET LAYOUT ON BUILDINGS WITH LARGE OPENINGS** **SYSTEMS:** **MECHANICALLY ATTACHED**	**DETAIL NO.:** **MHT-MA-103A** REVISION DATE: 10/2013

®

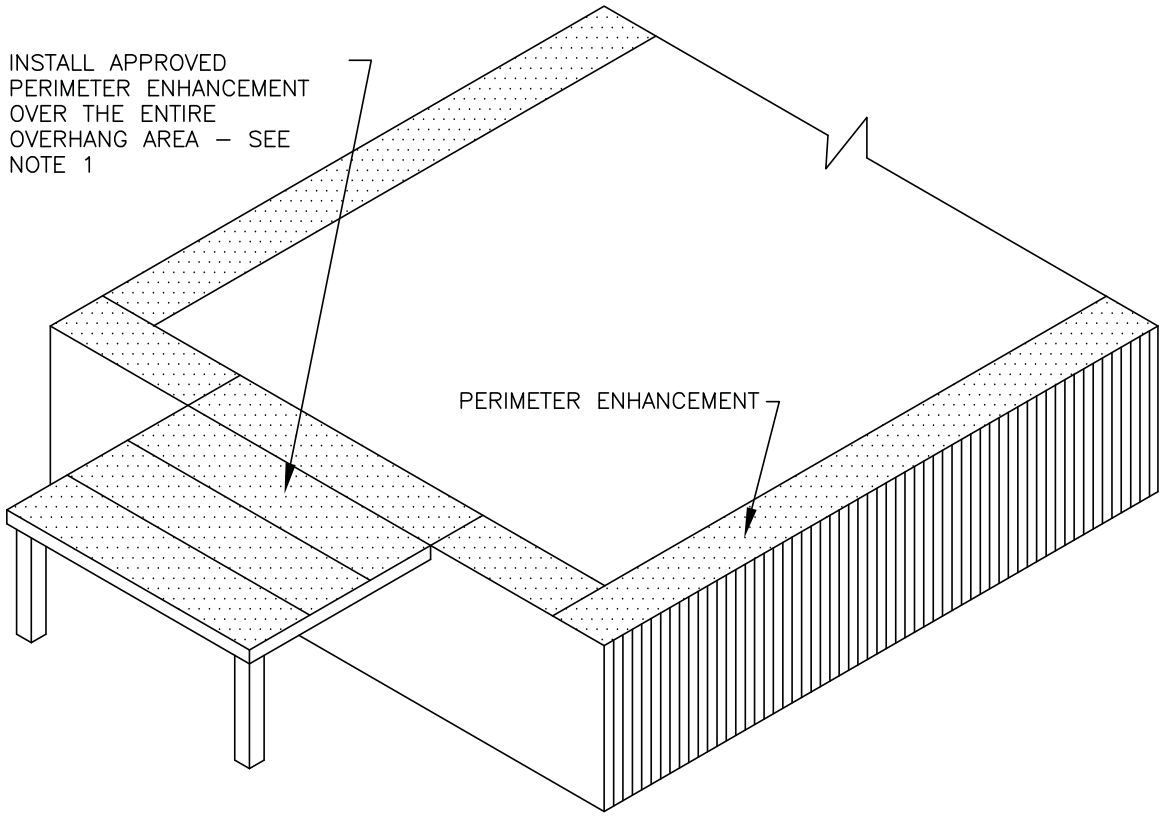

NOTES:

1. THE MEMBRANE MUST BE SPECIFIED WITH PERIMETER ENHANCEMENT INSTALLED OVER THE ENITIRE OVERHANG AREA. WHEN THE OVERHANG IS AT THE SAME LEVEL AS THE MAIN ROOF, EXTEND THE PERIMETER ENHANCEMENT ONTO THE MAIN ROOF LEVEL AS SHOWN.

2. AS AN OPTION, AN ADHERED MEMBRANE SECTION MAY BE USED IN LIEU OF THE MECHANICALLY FASTENED MEMBRANE AT BUILDING OVERHANGS IN ACCORDANCE WITH THE MULE–HIDE FULLY ADHERED TPO ROOF YSTEM SPECIFICATION.

3. REFER TO TECHNICAL BULLETIN #TPO–MA02–2006 FOR PERIMETER ENHANCEMENT REQUIREMENTS.

MULE-HIDE PRODUCTS CO., INC.	**SHEET LAYOUT ON BUILDINGS WITH OVERHANGS** **SYSTEMS:** **MECHANICALLY ATTACHED**	**DETAIL NO.:** **MHT-MA-103B** REVISION DATE: 10/2013

®

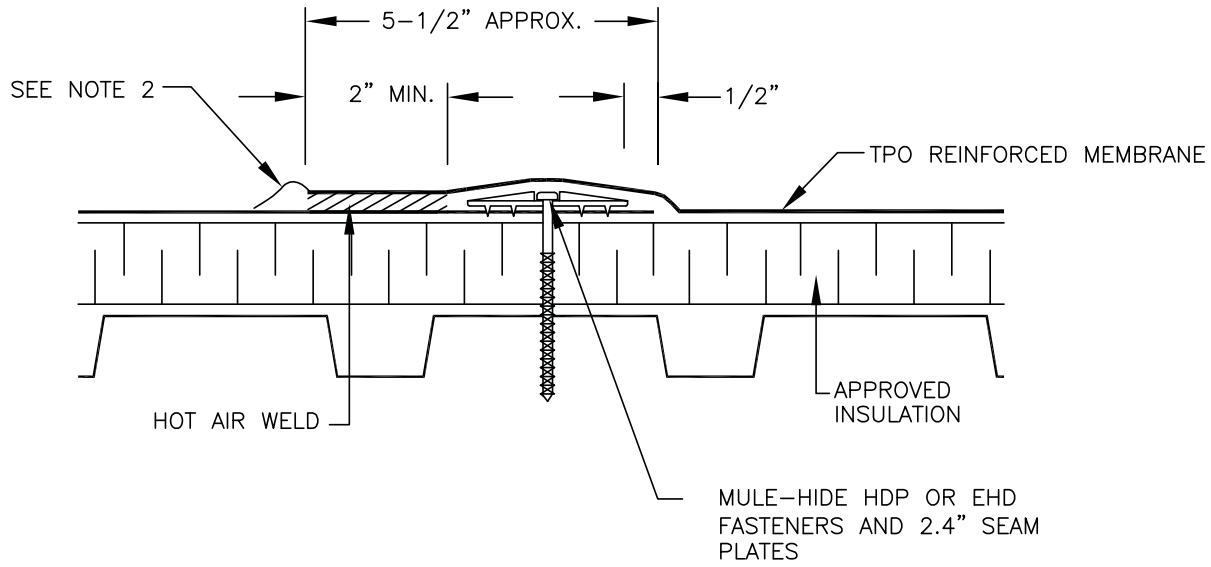

NOTES:

1. REFER TO MULE–HIDE TECHNICAL BULLETIN TPO–MA01–2006 FOR SHEET SIZE AND FASTENER SIZE REQUIRED FOR UPLIFT RESISTANCE. IF A FACTORY MUTUAL RATING OR CODE COMPLIANCE IS REQUIRED, CONTACT MULE–HIDE FOR SPECIFIC REQUIREMENTS.

2. APPROXIMATELY 1/8" DIAMETER BEAD OF CUT–EDGE SEALANT IS REQUIRED ON CUT EDGES OF TPO REINFORCED MEMBRANE.

3. A ROBOTIC WELDER MUST BE USED TO COMPLETE ALL FIELD SEAMS ON ALL WARRANTED PROJECTS.

MULE-HIDE PRODUCTS CO., INC.	**FIELD SEAM ATTACHMENT**	**DETAIL NO.:**
	SYSTEMS:	**MHT-MA-104A**
	MECHANICALLY ATTACHED	REVISION DATE: 10/2013

®

NOTE:

1. REFER TO MULE–HIDE TECHNICAL BULLETIN TPO–MA01–2006 FOR SHEET SIZE, FASTENER TYPE AND SIZE AND SPACING REQUIRED FOR UPLIFT RESISTANCE. IF A FACTORY MUTUAL RATING OR CODE COMPLIANCE IS REQUIRED, CONTACT MULE–HIDE FOR SPECIFIC REQUIREMENTS.

2. POSITION 2.4" SEAM PLATES 1/2" FROM EDGE OF MEMBRANE.

3. A ROBOTIC WELDER MUST BE USED TO COMPLETE ALL FIELD SEAMS ON ALL WARRANTED PROJECTS.

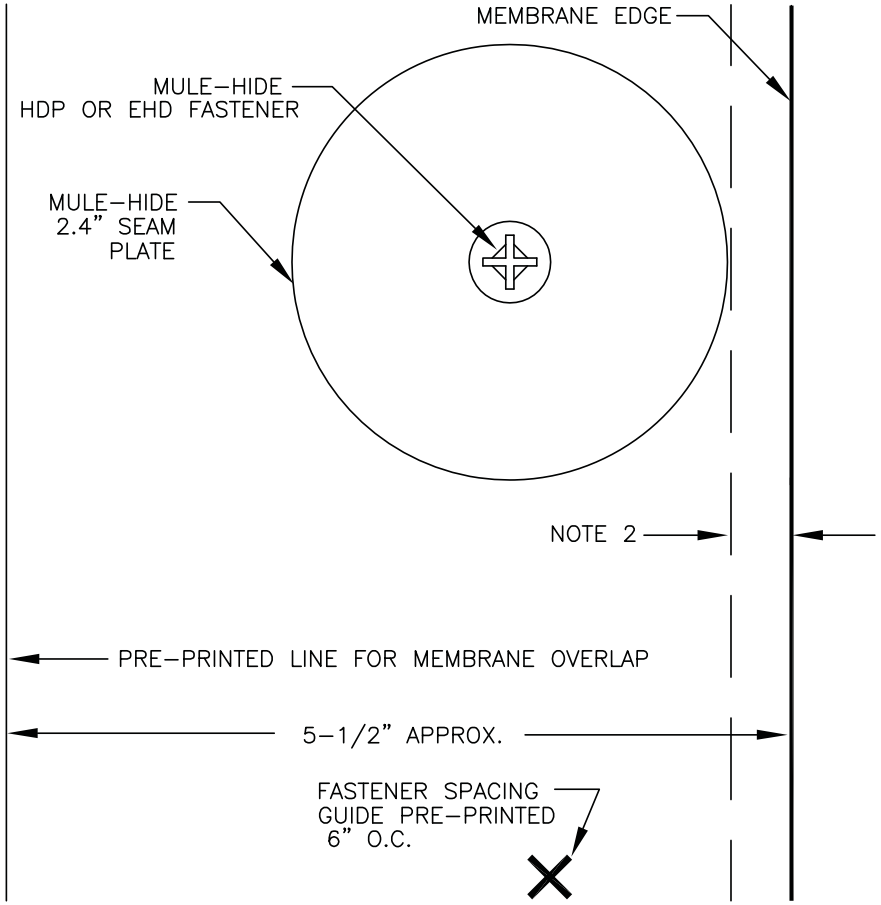

MULE-HIDE PRODUCTS CO., INC.	**FIELD SEAM - PLATE POSITION**	**DETAIL NO.:**
	SYSTEMS:	**MHT-MA-104B**
	MECHANICALLY ATTACHED	REVISION DATE: 10/2013

®

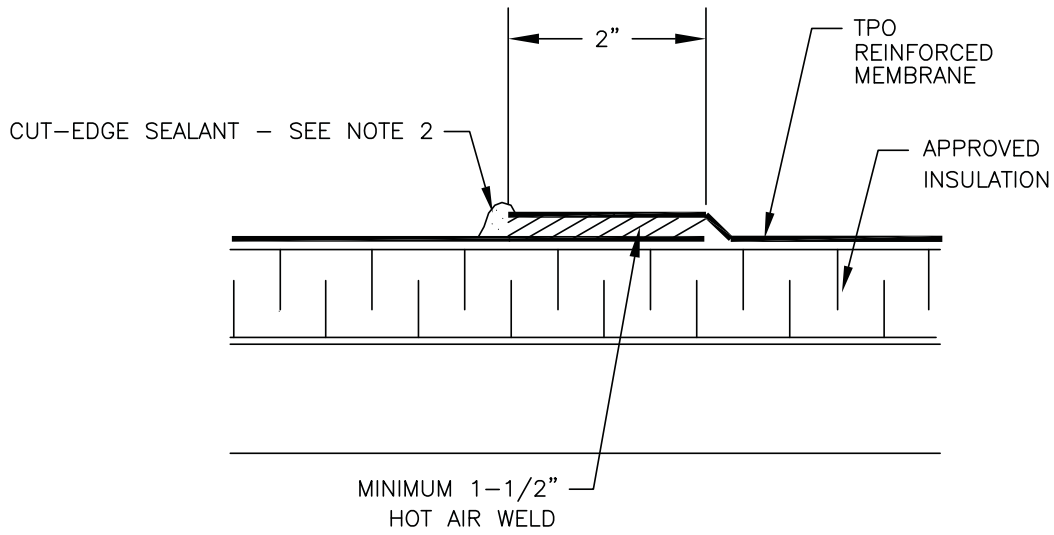

NOTE:

1. IT IS NOT NECESSARY TO FASTEN MEMBRANE AT END LAPS.
2. APPROXIMATELY 1/8" DIAMETER BEAD OF CUT–EDGE SEALANT IS REQUIRED ON CUT EDGES OF TPO REINFORCED MEMBRANE.

MULE-HIDE PRODUCTS CO., INC.	**END LAPS**	**DETAIL NO.:**
	SYSTEMS: ALL TPO SYSTEMS EXCEPT FLEECEBACK AND SELF ADHERING	**MHT-UN-104C**
		REVISION DATE: 10/2013

®

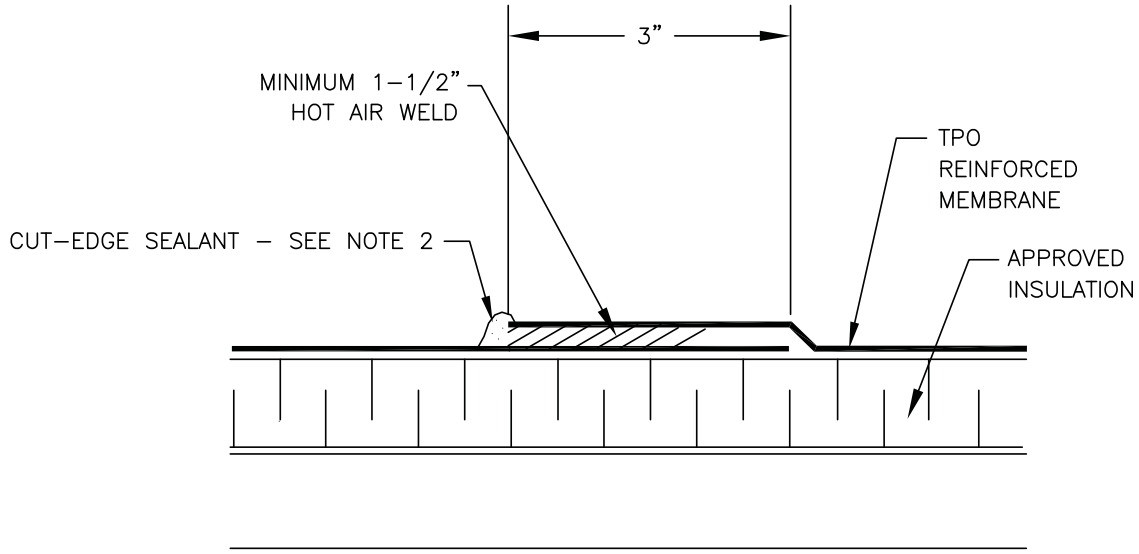

NOTE:

1. APPROXIMATELY 1/8" DIAMETER BEAD OF CUT-EDGE SEALANT IS REQUIRED ON CUT EDGES OF TPO REINFORCED MEMBRANE.
2. A ROBOTIC WELDER MUST BE USED TO COMPLETE ALL FIELD SEAMS ON ALL WARRANTED PROJECTS.

MULE-HIDE PRODUCTS CO., INC.	**FIELD SEAM**	**DETAIL NO.:**
	SYSTEMS: **FULLY ADHERED**	**MHT-FA-104D**
		REVISION DATE: 10/2013

®

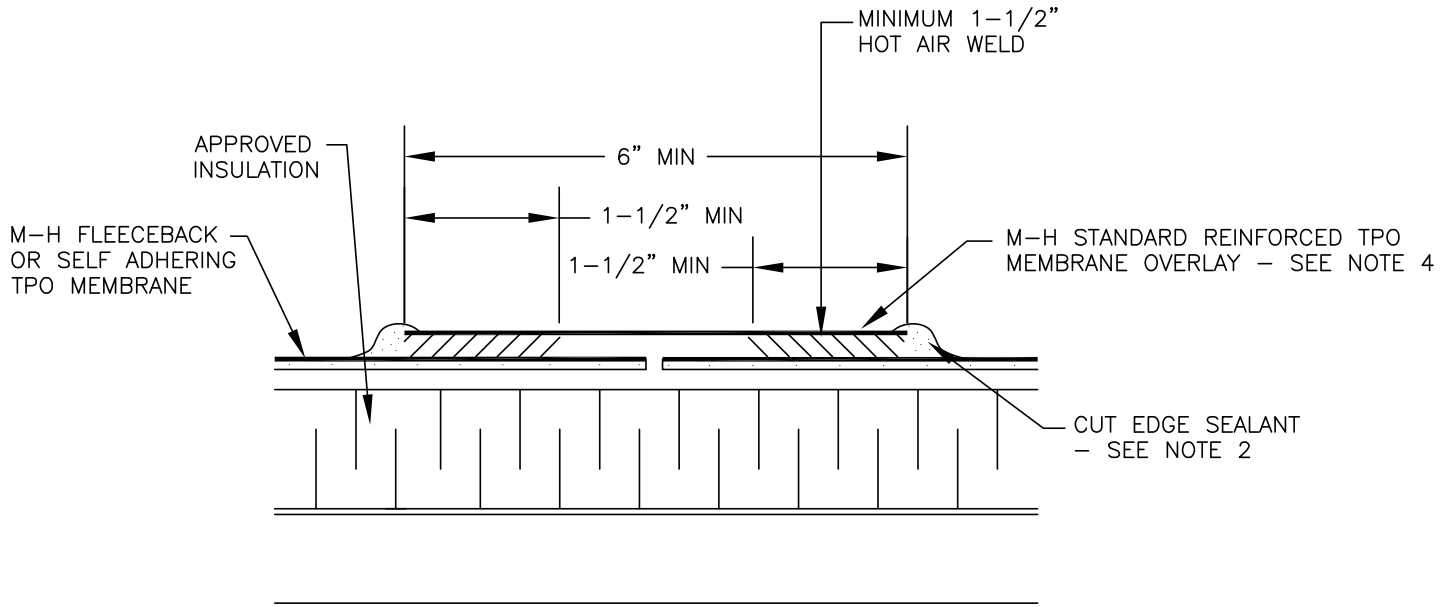

NOTE:

1. IT IS NOT NECESSARY TO FASTEN MEMBRANE AT END LAPS.
2. APPROXIMATELY 1/8" DIAMETER BEAD OF CUT–EDGE SEALANT IS REQUIRED ON CUT EDGES OF TPO REINFORCED MEMBRANE.
3. A ROBOTIC WELDER MUST BE USED TO COMPLETE ALL FIELD SEAMS ON ALL WARRANTED PROJECTS.
4. THICKNESS OF STANDARD REINFORCED TPO MEMBRANE TO MATCH THICKNESS OF FLEECEBACK OR SELF ADHERING TPO MEMBRANE.

MULE-HIDE PRODUCTS CO., INC.	**FLEECE BACK END LAPS**	**DETAIL NO.:**
	SYSTEMS:	**MHT-UN-104E**
	ALL TPO FLEECE BACK AND SELF ADHERING	REVISION DATE: 10/2013

®

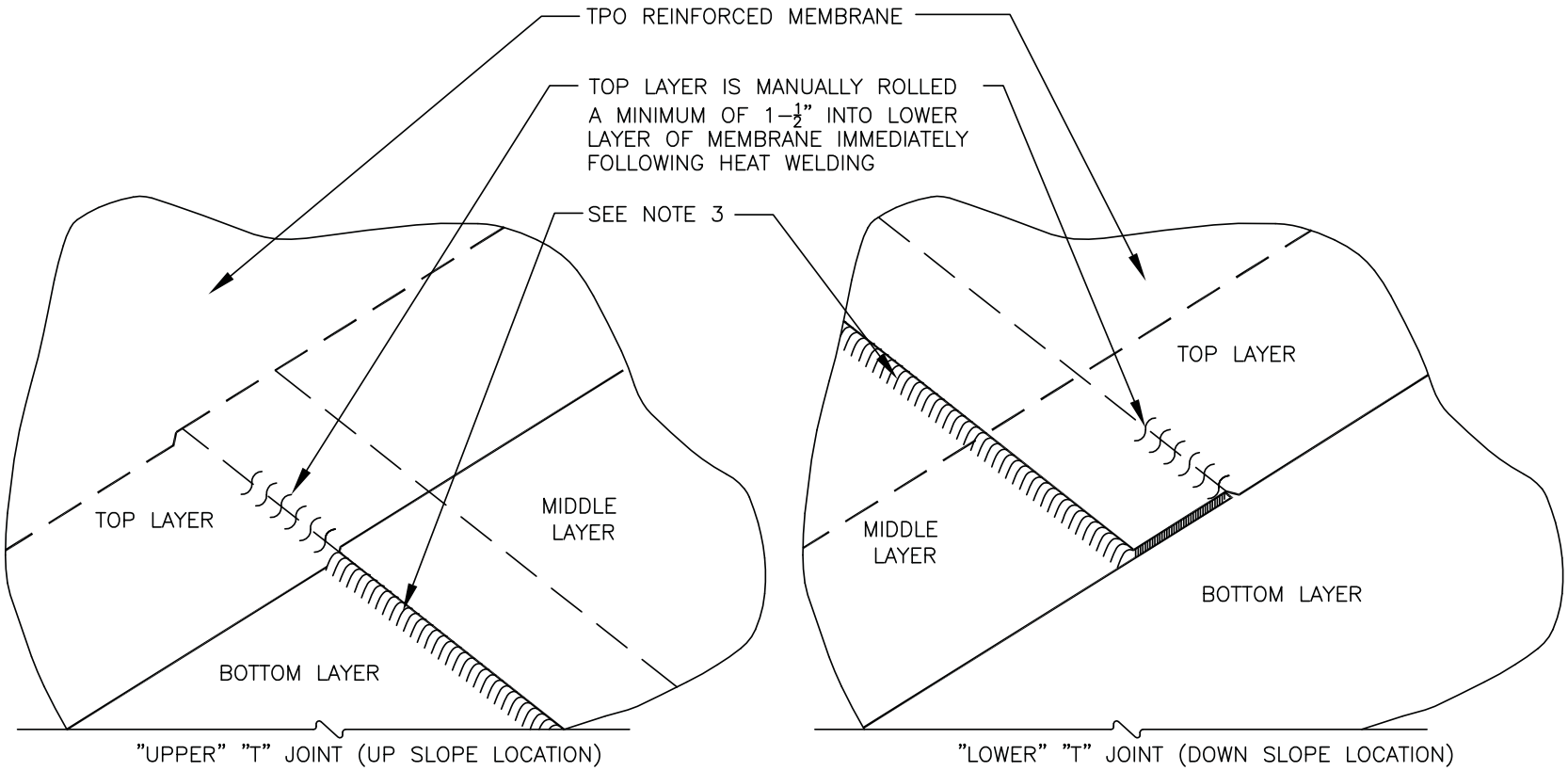

NOTES:

1. DETAIL TO BE USED IN CONJUCTION WITH STANDARD GUIDE SPECIFICATION CONTAINING REQUIREMENTS FOR NAILERS, INSULATION, ETC.
2. HEAT GUN MUST BE USED TO FORM MEMBRANE CREASE.
3. APPROXIMATELY ⅛" DIAMETER BEAD OF CUT EDGE SEALANT IS REQUIRED ON CUT EDGES OF TPO REINFORCED MEMBRANE.
4. THIS DETAIL IS NOT APPROVED FOR USE IN WARRANTIES LONGER THAN 15 YEARS.

MULE-HIDE PRODUCTS CO., INC.	**"T" JOINT DETAIL .045" (45 MIL) THICK MEMBRANES**	**DETAIL NO.:**
	SYSTEMS:	**MHT-UN-105A**
	ALL TPO SYSTEMS	REVISION DATE: 10/2013

®

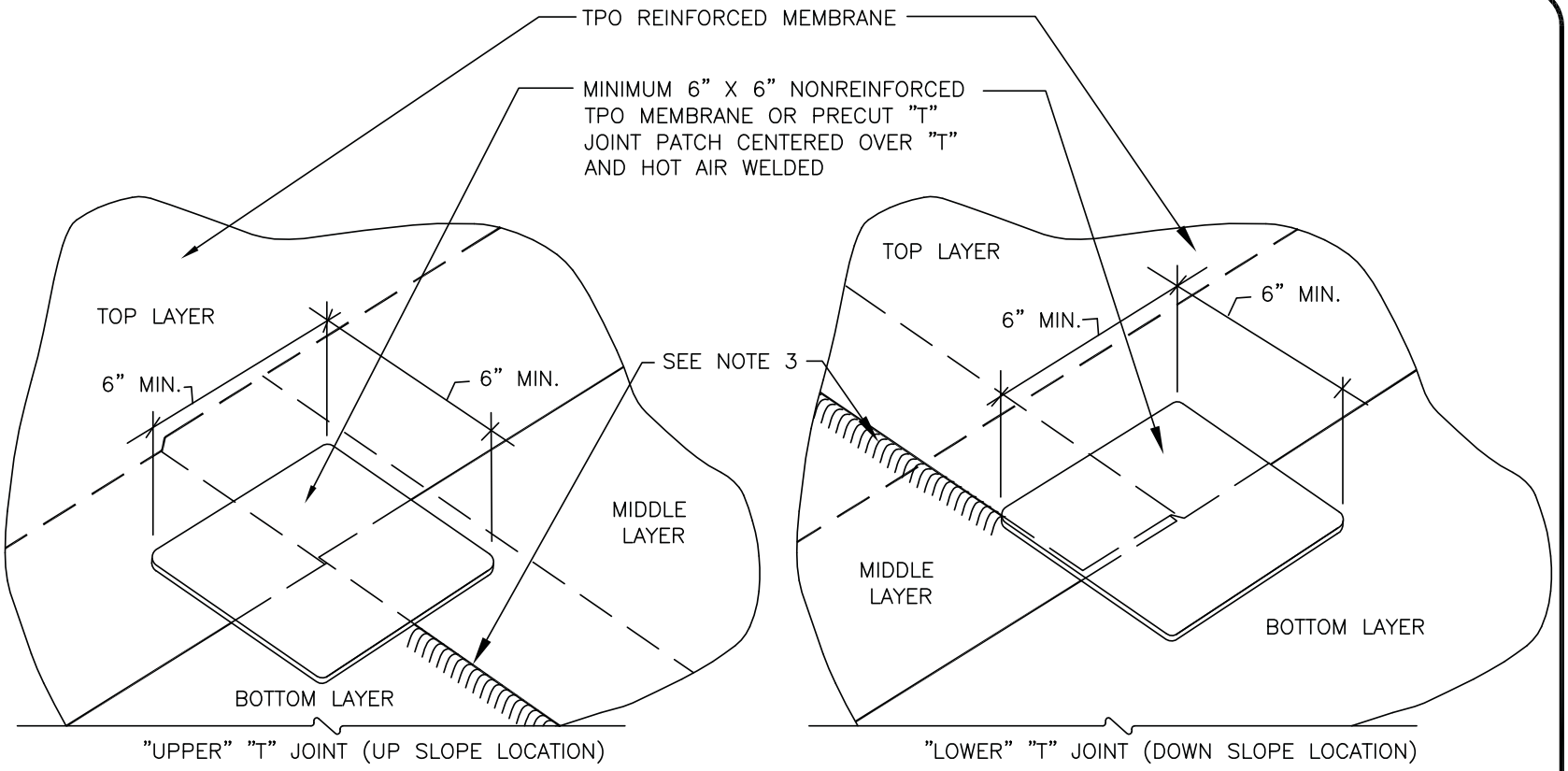

NOTES:

1. DETAIL TO BE USED IN CONJUCTION WITH STANDARD GUIDE SPECIFICATION CONTAINING REQUIREMENTS FOR NAILERS, INSULATION, ETC.
2. "T" PATCHES ARE REQUIRED ON ALL .060" AND .080" MEMBRANES AND ON ALL PROJECTS WITH WARRANTIES LONGER THAN 15 YEARS.
3. APPROXIMATELY ⅛" DIAMETER BEAD OF CUT EDGE SEALANT IS REQUIRED ON CUT EDGES OF TPO REINFORCED MEMBRANE.

MULE-HIDE PRODUCTS CO., INC.	**"T" JOINT COVER PATCH .060" (60 MIL) OR THICKER MEMBRANES**	**DETAIL NO.:**
	SYSTEMS:	**MHT-UN-105B**
	ALL TPO SYSTEMS	REVISION DATE: 10/2013

®

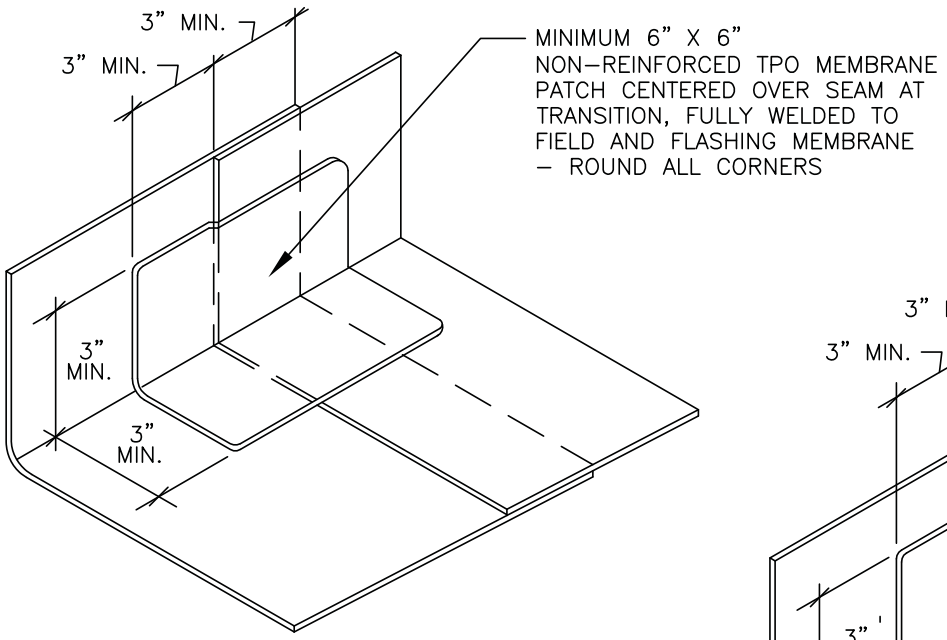

CONDITION 1 – WHEN RUSS IS USED

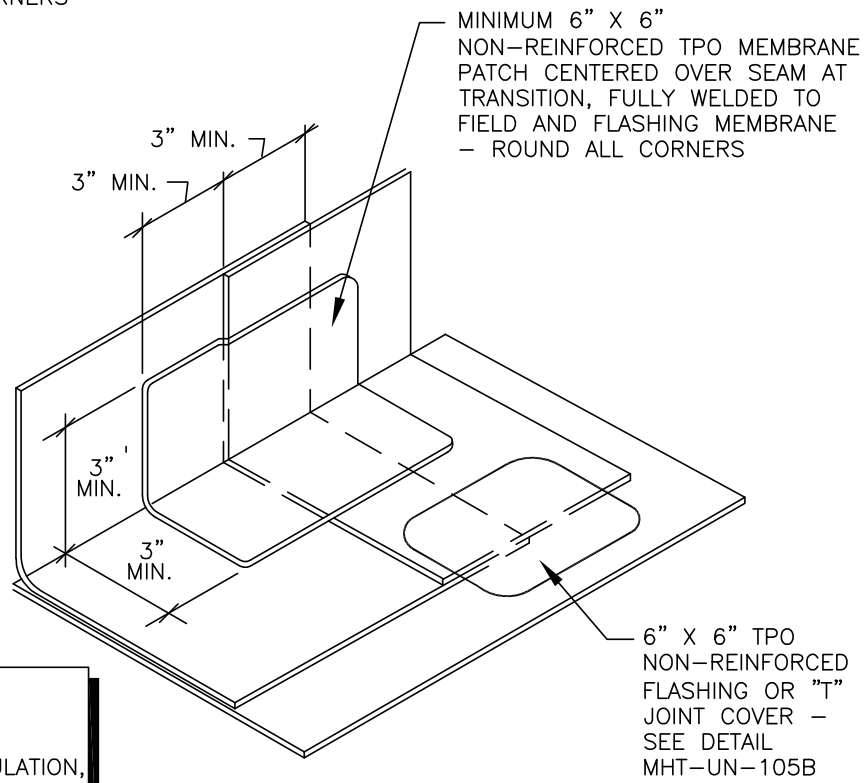

CONDITION 2 – WHEN RUSS IS NOT USED

NOTES:

1. DETAIL TO BE USED IN CONJUCTION WITH STANDARD GUIDE SPECIFICATION CONTAINING REQUIREMENTS FOR NAILERS, INSULATION, ETC.
2. FIELD / WALL TRANSITION PATCHES ARE REQUIRED ON ALL JOBS.

MULE-HIDE PRODUCTS CO., INC.	**SEAM PATCH AT FIELD / WALL TRANSITION**	**DETAIL NO.:**
	SYSTEMS:	**MHT-UN-105C**
	ALL TPO SYSTEMS	REVISION DATE: 10/2013

®

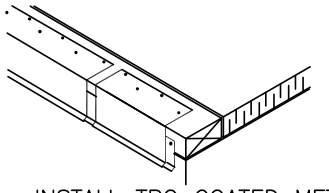

1. INSTALL TPO COATED METAL WITH $\frac{1}{8}$" – $\frac{1}{4}$" JOINTS BETWEEN ADJOINING SECTIONS.

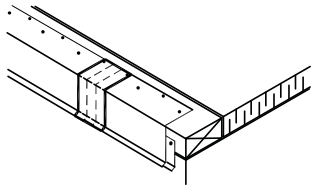

2. INSTALL 2" WIDE DUCT TAPE OVER JOINTS IN TPO COATED METAL.

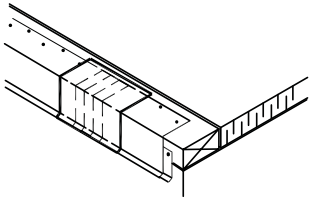

3. HEAT WELD 6" WIDE PIECE OF TPO NON–REINFORCED FLASHING OVER JOINT.

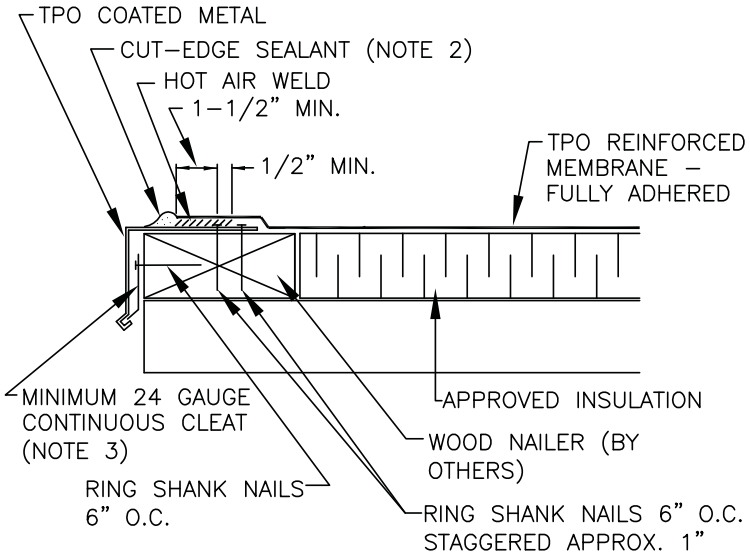

NOTES:

1. FASTENERS USED TO ATTACH TPO COATED METAL MUST PENETRATE WOOD NAILERS A MINIMUM OF 1–$\frac{1}{4}$". IF $\frac{1}{2}$" PLYWOOD IS USED AS THE TOP NAILER, FASTENERS MUST PENETRATE A MINIMUM OF 1–$\frac{1}{4}$" INTO NAILER BELOW.

2. APPROXIMATELY $\frac{1}{8}$" DIAMETER BEAD OF CUT–EDGE SEALANT IS REQUIRED ON CUT EDGES OF TPO REINFORCED MEMBRANE.

3. GAUGE OF CONTINUOUS CLEAT IS DEPENDENT ON THE FASCIA HEIGHT AS SHOWN IN THE CHART BELOW.

MAX. FASCIA HEIGHT	GAUGE OF CONT. CLEAT
4"	24 GAUGE
6"	22 GAUGE
8"	20 GAUGE

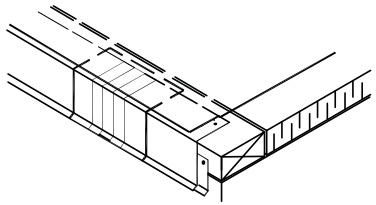

4. POSITION TPO REINFORCED MEMBRANE AND HEAT WELD TO TPO COATED METAL A MINIMUM OF 1–$\frac{1}{2}$" AS SHOWN TO LEFT.

NOTE:

THIS DETAIL IS ACCEPTABLE FOR USE IN A 20–YEAR WARRANTED SYSTEM

IF SHEETMETAL IS TO BE INCLUDED IN THE WARRANTY, CONTRACTOR MUST USE MULE–HIDE METAL PRODUCTS. REFER TO DETAILS MHT–3120, MHE–3120, MHT–3550, OR MHT–3555

MULE-HIDE PRODUCTS CO., INC.

DRIP EDGE
TPO COATED METAL

SYSTEMS:

FULLY ADHERED

DETAIL NO.:

MHT-FA-106A

REVISION DATE: 10/2013

NOTES:

1. CLEAN THE EXISTING MEMBRANE (AND METAL IF APPLICABLE) WITH WEATHERED MEMBRANE CLEANER. PRIME THE MEMBRANE USING TAPE PRIMER. ONCE THE PRIMER IS PROPERLY DRIED, THE TPO PRESSURE–SENSITIVE COVER STRIP IS APPLIED AND ROLLED USING A 2" WIDE ROLLER.

2. WOOD NAILER MUST EXTEND PAST TOTAL WIDTH OF METAL FASCIA DECK FLANGE.

3. FASTENERS AND FASTENER PATTERN AS RECOMMENDED BY METAL EDGE MANUFACTURER.

4. DECK FLANGE MUST BE TOTALLY COVERED BY TPO PRESSURE–SENSITIVE COVER STRIP WITH MINIMUM 2" COVERAGE PAST NAIL HEADS.

5. APPLY MULE–HIDE UNIVERSAL SINGLE PLY SEALANT ALONG BOTH EDGES OF TPO COVER TAPE AND ACROSS ENDLAPS.

HEAT COVER STRIP AT SPLICE INTERSECTIONS PRIOR TO ROLLING TO CONFORM TO STEP–OFFS

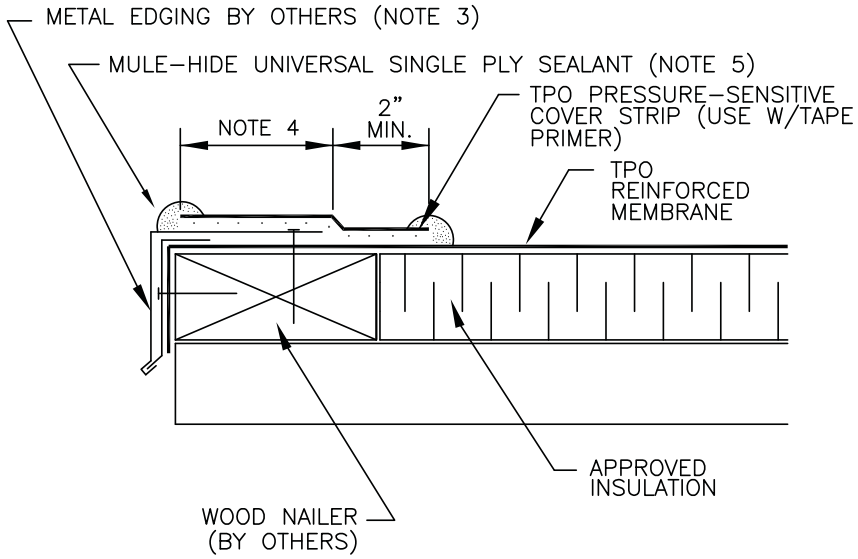

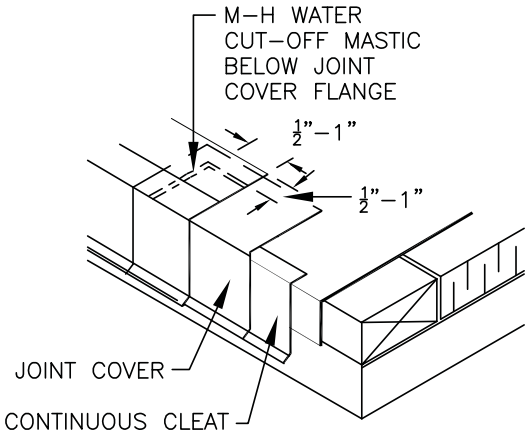

NOTE:

THIS DETAIL IS ACCEPTABLE FOR USE IN A 20–YEAR WARRANTED SYSTEM

IF SHEETMETAL IS TO BE INCLUDED IN THE WARRANTY, CONTRACTOR MUST USE MULE–HIDE METAL PRODUCTS. REFER TO DETAILS MHT–3120, MHE–3120, MHT–3550, OR MHT–3555

MULE-HIDE PRODUCTS CO., INC.	**DRIP EDGE** **TPO P/S COVER STRIP** **SYSTEMS:** **ALL TPO SYSTEMS**	**DETAIL NO.:** **MHT-UN-106B** REVISION DATE: 10/2013

®

NOTES:

1. CLEAN THE EXISTING MEMBRANE (AND METAL IF APPLICABLE) WITH WEATHERED MEMBRANE CLEANER. PRIME THE MEMBRANE USING TAPE PRIMER. ONCE THE PRIMER IS PROPERLY DRIED, THE WHITE EPDM CURED COVER STRIP IS APPLIED AND ROLLED USING A 2" WIDE ROLLER.

2. WOOD NAILER MUST EXTEND PAST TOTAL WIDTH OF METAL FASCIA DECK FLANGE.

3. FASTENERS AND FASTENER PATTERN AS RECOMMENDED BY METAL EDGE MANUFACTURER.

4. DECK FLANGE MUST BE TOTALLY COVERED BY WHITE EPDM CURED COVER STRIP WITH MINIMUM 2" COVERAGE PAST NAIL HEADS.

5. APPLY MULE-HIDE UNIVERSAL SINGLE PLY SEALANT ALONG BOTH EDGES OF WHITE EPDM CURED COVER TAPE AND ACROSS END LAPS.

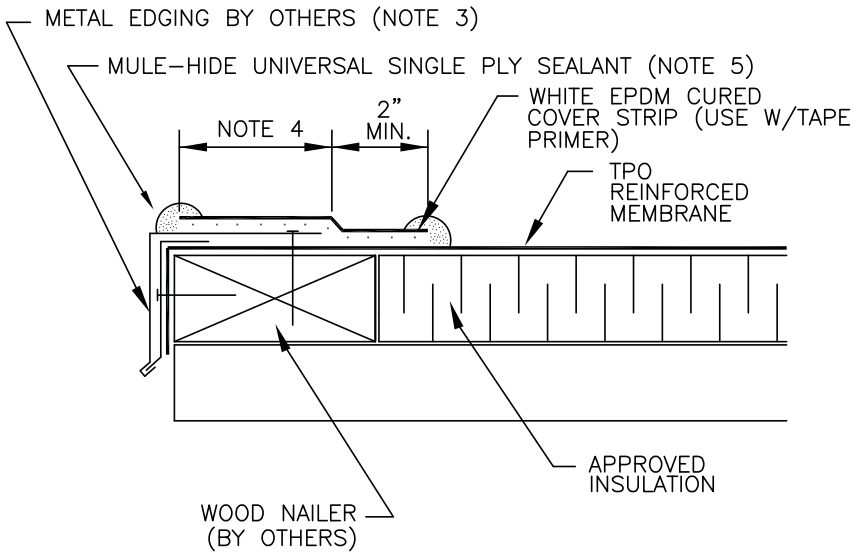

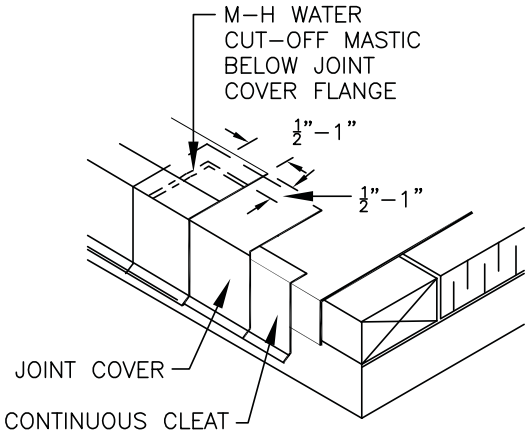

NOTE:

THIS DETAIL IS ACCEPTABLE FOR USE IN A 20-YEAR WARRANTED SYSTEM

IF SHEETMETAL IS TO BE INCLUDED IN THE WARRANTY, CONTRACTOR MUST USE MULE-HIDE METAL PRODUCTS. REFER TO DETAILS MHT-3120, MHE-3120, MHT-3550, OR MHT-3555

MULE-HIDE PRODUCTS CO., INC.	**DRIP EDGE** **WHITE EPDM CURED COVER TAPE** **SYSTEMS:** **ALL TPO SYSTEMS**	**DETAIL NO.:** **MHT-UN-106C** REVISION DATE: 10/2013

®

NOTES:

1. WHERE MULTI–LEVEL ROOFS MEET AT A COMMON WALL AND THE DIFFERENCE IN HEIGHT IS LESS THAN 3 FT, THE ROOF STRIP OF THE UPPER ROOF AND THE ROOF STRIP OF THE LOWER ROOF ARE EACH TREATED AS FIELD AREAS, EXCEPT FOR THE SQUARE AREAS AT EACH END, WHICH ARE TREATED AS PERIMETER AREAS.

2. FOR FACTORY MUTUAL PROJECTS, THE WIDTH OF THE ROOF PERIMETER AND CORNER AREAS IS DEFINED AS THE SMALLER OF 0.1 TIMES THE BUILDING LESSER PLAN DIMENSION OR 0.4 TIMES THE EAVE HEIGHT (MEAN ROOF HEIGHT FOR SLOPES GREATER THAN 2"/12" SLOPE), EXCEPT FOR HEIGHTS GREATER THAN 60 FT.

3. ROOF PERIMETER

   MECHANICALLY ATTACHED SYSTEMS
   DISTANCE BETWEEN ROWS IS LESS THAN OR EQUAL TO 60% OF THE APPROVED ROOF FIELD SPACING OF THE FASTENER ROWS.

   FULLY ADHERED SYSTEMS
   ALL ROOF PERIMETER DIMENSIONS ARE TO BE A MINIMUM OF EIGHT (8) FEET AND INSULATION FASTENERS ARE INCREASED 50%.

4. ROOF CORNERS

   MECHANICALLY ATTACHED SYSTEMS
   DISTANCE BETWEEN ROWS IS LESS THAN OR EQUAL TO 40% OF THE APPROVED ROOF FIELD SPACING OF THE FASTENER ROWS.

   FULLY ADHERED SYSTEMS
   ALL ROOF CORNER DIMENSIONS ARE TO BE A MINIMUM OF EIGHT (8) FEET BY EIGHT (8) FEET AND INSULATION FASTENERS ARE INCREASED 100%.

5. INCREASED FASTENING IN THE PERIMETERS AND CORNERS IS REQUIRED ON ALL WARRANTED JOBS, BOTH MECHANICALLY ATTACHED AND FULLY ADHERED.

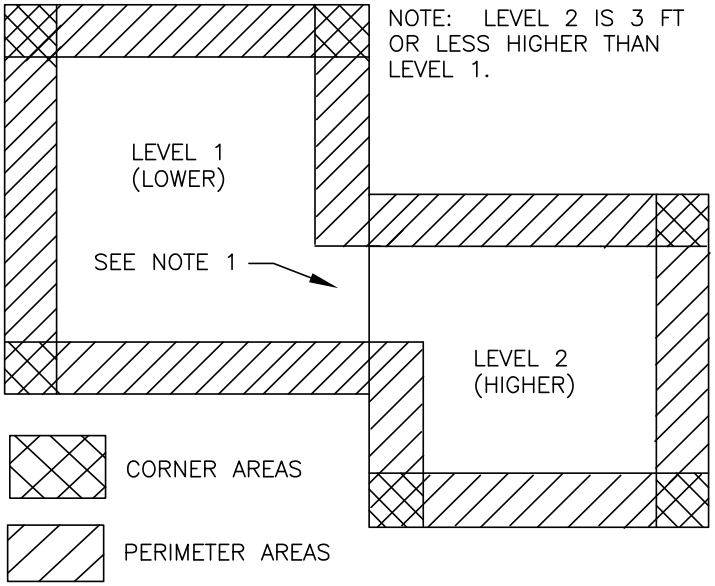

MULE-HIDE PRODUCTS CO., INC.	**ROOF PERIMETER / CORNER CALCULATION ELEVATION DIFFERENCE 3' OR LESS** **SYSTEMS:** **ALL TPO SYSTEMS**	**DETAIL NO.:** **MHT-UN-108A** REVISION DATE: 10/2013

®

NOTES:

1. WHERE MULTI–LEVEL ROOFS MEET AT A COMMON WALL AND THE DIFFERENCE IN HEIGHT IS GREATER THAN 3 FT, THE EDGE OF THE UPPER ROOF IS TREATED AS ROOF PERIMETER AND CORNERS. THE LOWER ROOF STRIP WHERE IT MEETS A HIGHER WALL IS TREATED AS FIELD AREA, EXCEPT FOR THE SQUARE AREAS AT EACH END WHICH ARE TREATED AS PERIMETER AREAS.

2. FOR FACTORY MUTUAL PROJECTS, THE WIDTH OF THE ROOF PERIMETER AND CORNER AREAS IS DEFINED AS THE SMALLER OF 0.1 TIMES THE BUILDING LESSER PLAN DIMENSION OR 0.4 TIMES THE EAVE HEIGHT (MEAN ROOF HEIGHT FOR SLOPES GREATER THAN 2"/12" SLOPE), EXCEPT FOR HEIGHTS GREATER THAN 60 FT.

3. ROOF PERIMETER

   MECHANICALLY ATTACHED SYSTEMS
   DISTANCE BETWEEN ROWS IS LESS THAN OR EQUAL TO 60% OF THE APPROVED ROOF FIELD SPACING OF THE FASTENER ROWS.

   FULLY ADHERED SYSTEMS
   ALL ROOF PERIMETER DIMENSIONS ARE TO BE A MINIMUM OF EIGHT (8) FEET AND INSULATION FASTENERS ARE INCREASED 50%.

4. ROOF CORNERS

   MECHANICALLY ATTACHED SYSTEMS
   DISTANCE BETWEEN ROWS IS LESS THAN OR EQUAL TO 40% OF THE APPROVED ROOF FIELD SPACING OF THE FASTENER ROWS.

   FULLY ADHERED SYSTEMS
   ALL ROOF CORNER DIMENSIONS ARE TO BE A MINIMUM OF EIGHT (8) FEET BY EIGHT (8) FEET AND INSULATION FASTENERS ARE INCREASED 100%.

5. INCREASED FASTENING IN THE PERIMETERS AND CORNERS IS REQUIRED ON ALL WARRANTED JOBS, BOTH MECHANICALLY ATTACHED AND FULLY ADHERED.

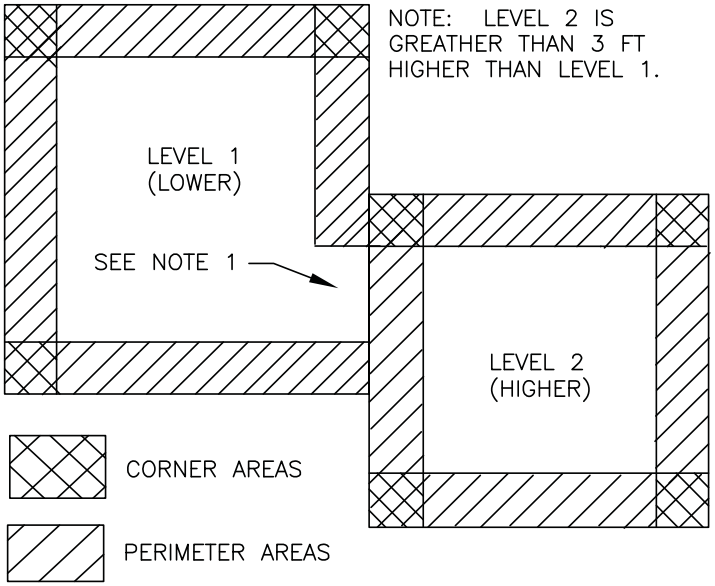

MULE-HIDE PRODUCTS CO., INC.	**ROOF PERIMETER / CORNER CALCULATION ELEVATION DIFFERENCE GREATER THAN 3'** **SYSTEMS:** **ALL TPO SYSTEMS**	**DETAIL NO.:** **MHT-UN-108B** REVISION DATE: 10/2013

®

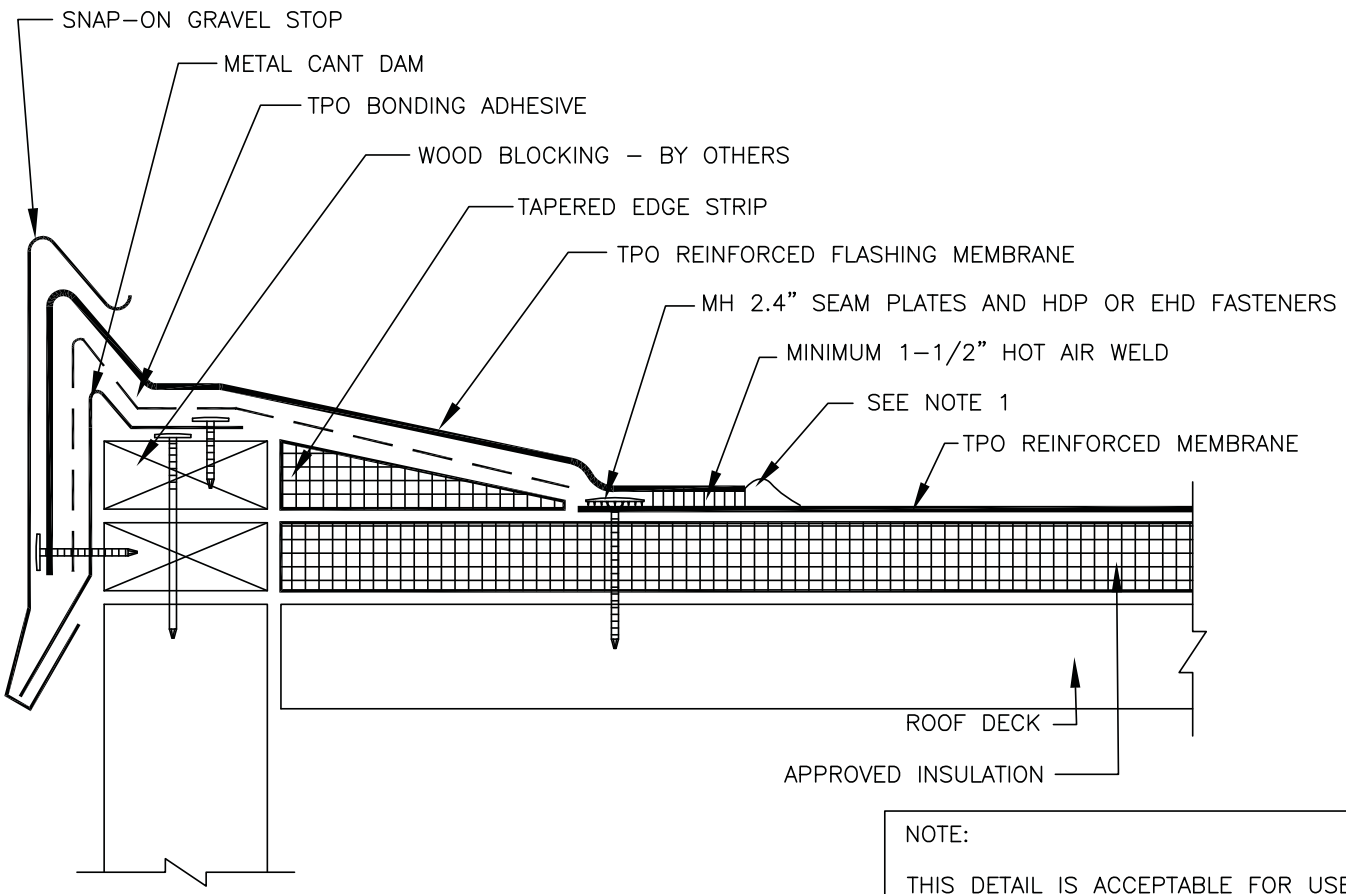

NOTE:

THIS DETAIL IS ACCEPTABLE FOR USE IN A 20–YEAR WARRANTED SYSTEM

IF SHEETMETAL IS TO BE INCLUDED IN THE WARRANTY, CONTRACTOR MUST USE MULE–HIDE METAL PRODUCTS. REFER TO DETAILS MHT–3110A OR MHT–3115A

NOTES:

1. APPROXIMATELY $\frac{1}{8}$" DIAMETER BEAD OF CUT–EDGE SEALANT IS REQUIRED ON CUT EDGES OF TPO REINFORCED MEMBRANE.

MULE-HIDE PRODUCTS CO., INC.	**TAPERED EDGE / GRAVEL STOP**	**DETAIL NO.:**
	SYSTEMS:	**MHT-UN-201**
	ALL TPO SYSTEMS	REVISION DATE: 10/2013

®

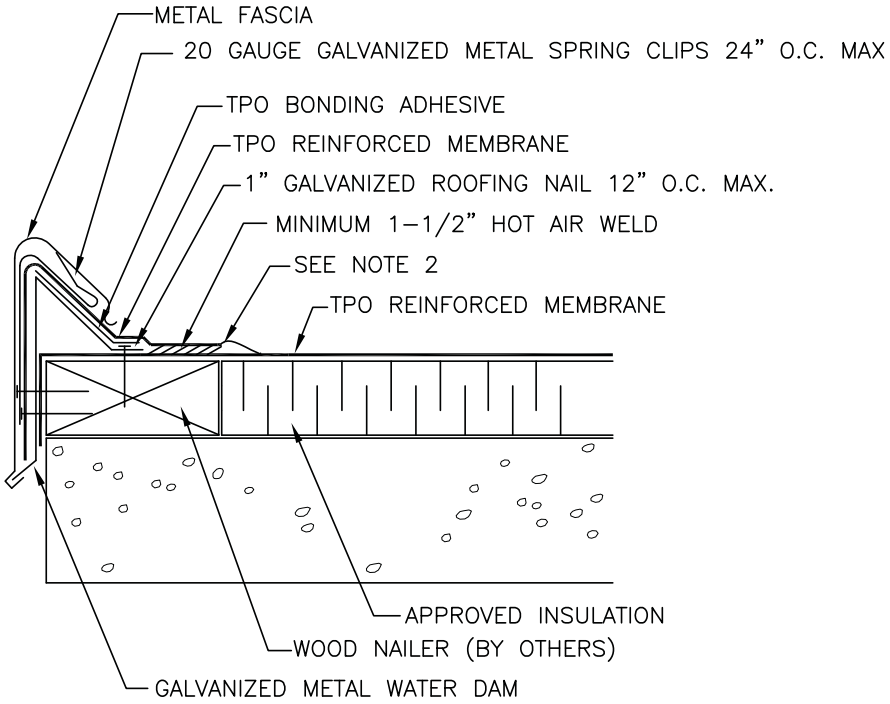

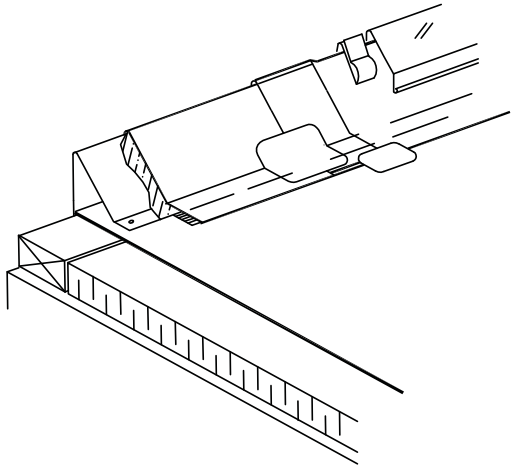

NOTE:

THIS DETAIL IS ACCEPTABLE FOR USE IN A 20-YEAR WARRANTED SYSTEM

IF SHEETMETAL IS TO BE INCLUDED IN THE WARRANTY, CONTRACTOR MUST USE MULE-HIDE METAL PRODUCTS. REFER TO DETAILS MHT-3110A OR MHT-3115A

NOTES:

1. WOOD NAILER MUST EXTEND PAST TOTAL WIDTH OF DECK FLANGE.
2. APPROXIMATELY 1/8" DIAMETER BEAD OF CUT-EDGE SEALANT IS REQUIRED ON CUT EDGES OF TPO REINFORCED MEMBRANE.

MULE-HIDE PRODUCTS CO., INC.	**SNAP-ON FASCIA WITH SPRING CLIPS**	**DETAIL NO.:**
	SYSTEMS:	**MHT-UN-202A**
	ALL TPO SYSTEMS	REVISION DATE: 10/2013

®

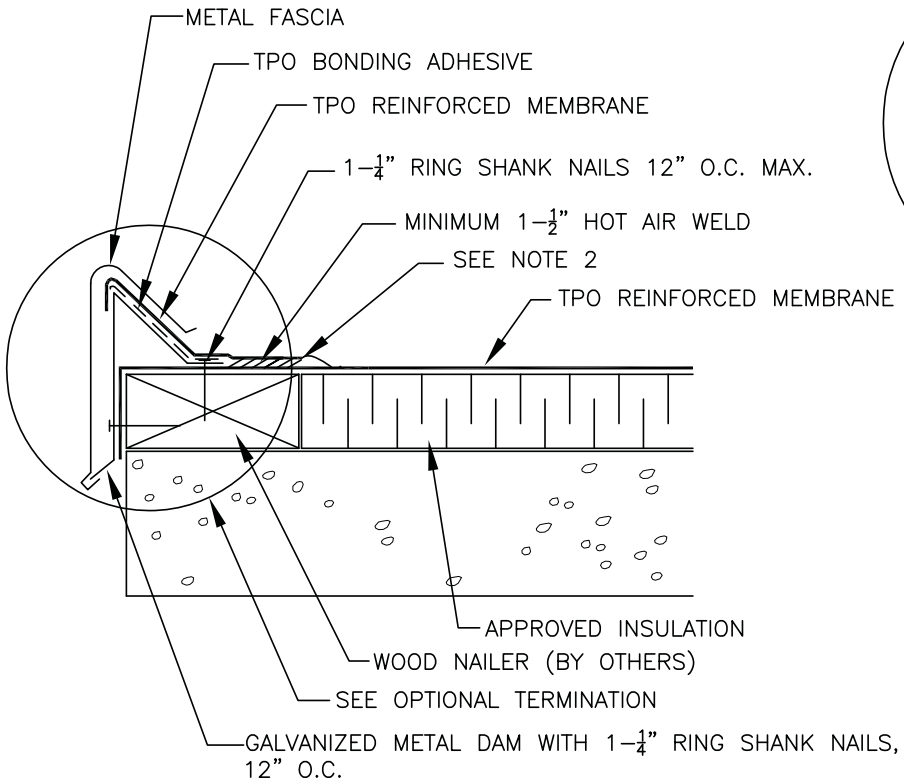

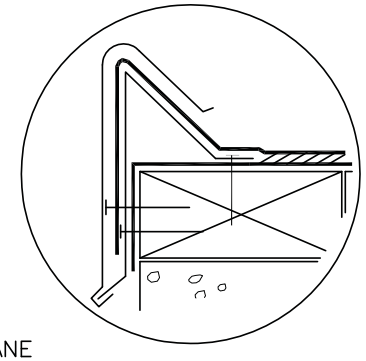

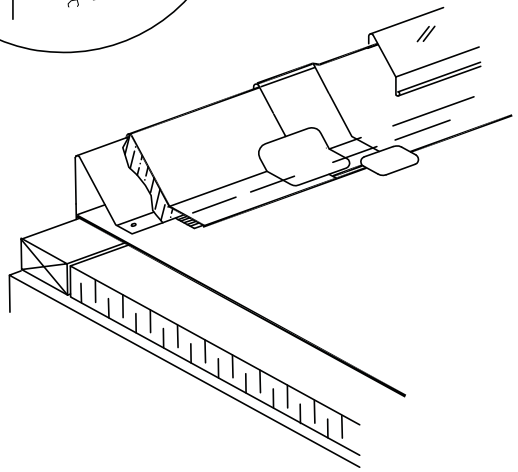

NOTES:

1. WOOD NAILER MUST EXTEND PAST TOTAL WIDTH OF DECK FLANGE.
2. APPROXIMATELY 1/8" DIAMETER BEAD OF CUT–EDGE SEALANT IS REQUIRED ON CUT EDGES OF TPO REINFORCED MEMBRANE.

NOTE:

THIS DETAIL IS ACCEPTABLE FOR USE IN A 20–YEAR WARRANTED SYSTEM

IF SHEETMETAL IS TO BE INCLUDED IN THE WARRANTY, CONTRACTOR MUST USE MULE–HIDE METAL PRODUCTS. REFER TO DETAILS MHT–3110A OR MHT–3115A

MULE-HIDE PRODUCTS CO., INC.	**SNAP-ON FASCIA**	**DETAIL NO.:**
	SYSTEMS:	**MHT-UN-202B**
	ALL TPO SYSTEMS	REVISION DATE: 10/2013

®

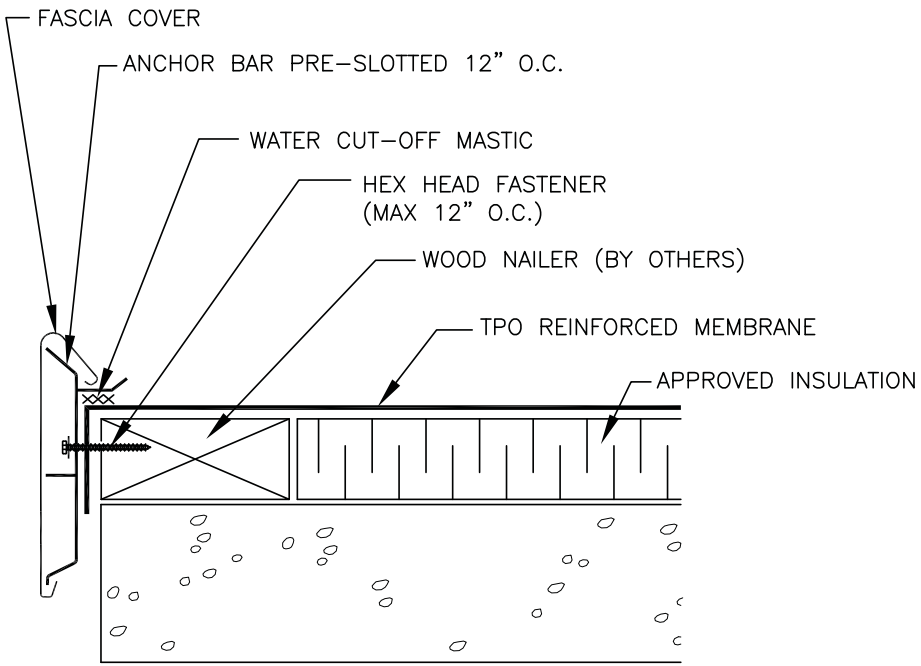

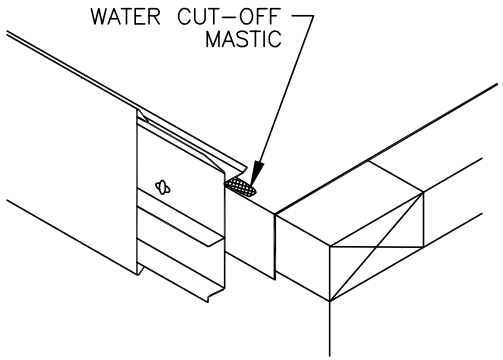

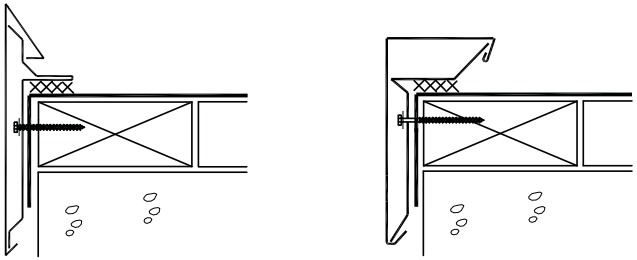

ANCHOR BAR OPTIONS

NOTES:

1. IF INCIDENTAL/PERIODIC PONDED WATER IS EXPECTED, THE FASCIA SYSTEM MUST BE ELEVATED AND SCUPPERS PROVIDED FOR DRAINAGE.
2. CONTACT METAL-ERA (800-558-2162) FOR INSTALLATION INSTRUCTION MANUAL FOR STEP-BY-STEP PROCEDURES AND FOR THE VARIOUS PRODUCT FEATURES AVAILABLE.
3. ANCHOR-TITE FASCIA SYSTEM IS A PATENTED EDGE SYSTEM MANUFACTURED BY METAL-ERA INC.
4. ANCHOR-TITE FASCIA SYSTEM IS ELIGIBLE FOR A SHEET METAL WARRANTY FROM MULE-HIDE.

NOTE:

THIS DETAIL IS ACCEPTABLE FOR USE IN A 20-YEAR WARRANTED SYSTEM

MULE-HIDE PRODUCTS CO., INC.	**ANCHOR-TITE FASCIA SYSTEM BY METAL-ERA, INC.** **SYSTEMS:** **ALL TPO SYSTEMS**	**DETAIL NO.:** **MHT-UN-204** REVISION DATE: 10/2013

®

NOTE:

IF SHEETMETAL IS TO BE INCLUDED IN THE WARRANTY, CONTRACTOR MUST USE MULE–HIDE METAL PRODUCTS. REFER TO DETAILS MHSM–3500, MHSM–3510, OR MHSM–3511.

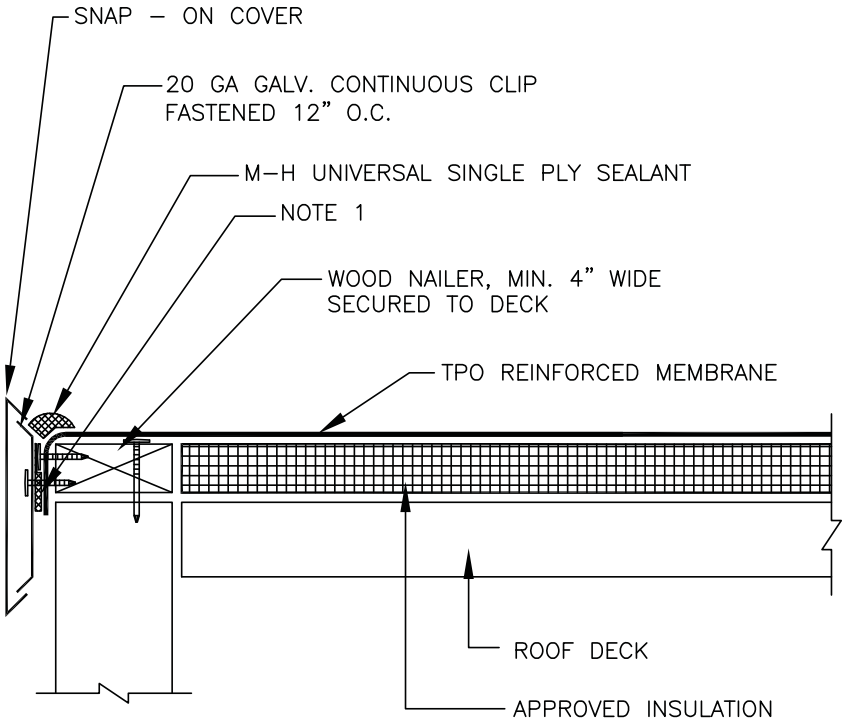

NOTES:

1. INSTALL A BEAD OF APPROVED SEALANT BETWEEN THE CLIP AND THE TPO REINFORCED MEMBRANE.

2. SNAP ON COVER SHALL BE A MINIMUM THICKNESS OF:
   STEEL – 24 GAUGE
   ALUMINUM – .032 INCHES

NOTE:

THIS DETAIL IS ACCEPTABLE FOR USE IN A 20–YEAR WARRANTED SYSTEM

MULE-HIDE PRODUCTS CO., INC.	**FASCIA / DRIP EDGE SYSTEM**	**DETAIL NO.:**
	SYSTEMS:	**MHT-UN-205**
	ALL TPO SYSTEMS	REVISION DATE: 10/2013

®

NOTE:

IF SHEETMETAL IS TO BE INCLUDED IN THE WARRANTY, CONTRACTOR MUST USE MULE–HIDE METAL PRODUCTS. REFER TO DETAIL MHSM–2091.

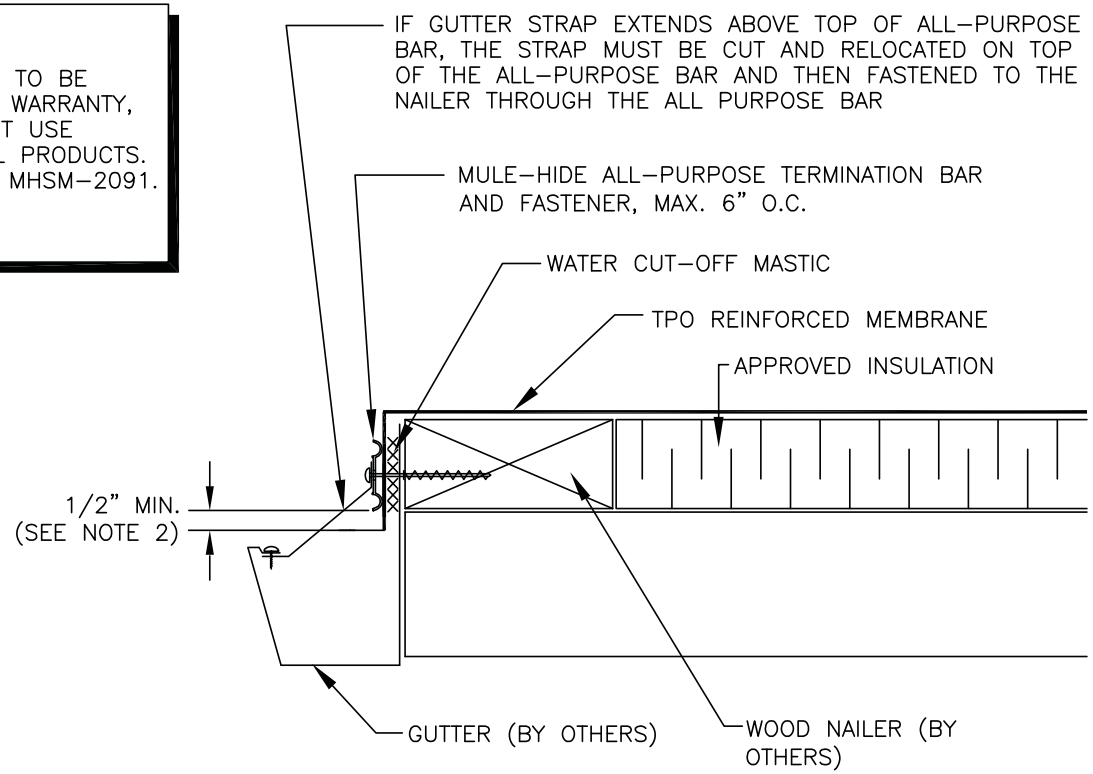

NOTES:

1. FASTENING OF ALL–PURPOSE BAR MUST PROVIDE CONSTANT COMPRESSION ON WATER CUT–OFF MASTIC.
2. ALL PURPOSE BAR IS INSTALLED WITH "BUMPS" DOWN, FACING THE MEMBRANE.
3. ALLOW MEMBRANE SHEET TO EXTEND 1/2" MINIMUM BELOW ALL–PURPOSE BAR TO ENSURE FASTENER PENETRATION THROUGH SCRIM REINFORCEMENT.

NOTE:

THIS DETAIL IS ACCEPTABLE FOR USE IN A 20–YEAR WARRANTED SYSTEM

MULE-HIDE PRODUCTS CO., INC.	**ALL - PURPOSE BAR EDGE TERMINATION**	**DETAIL NO.:**
	SYSTEMS:	**MHT-UN-206**
	ALL TPO SYSTEMS	REVISION DATE: 10/2013

®

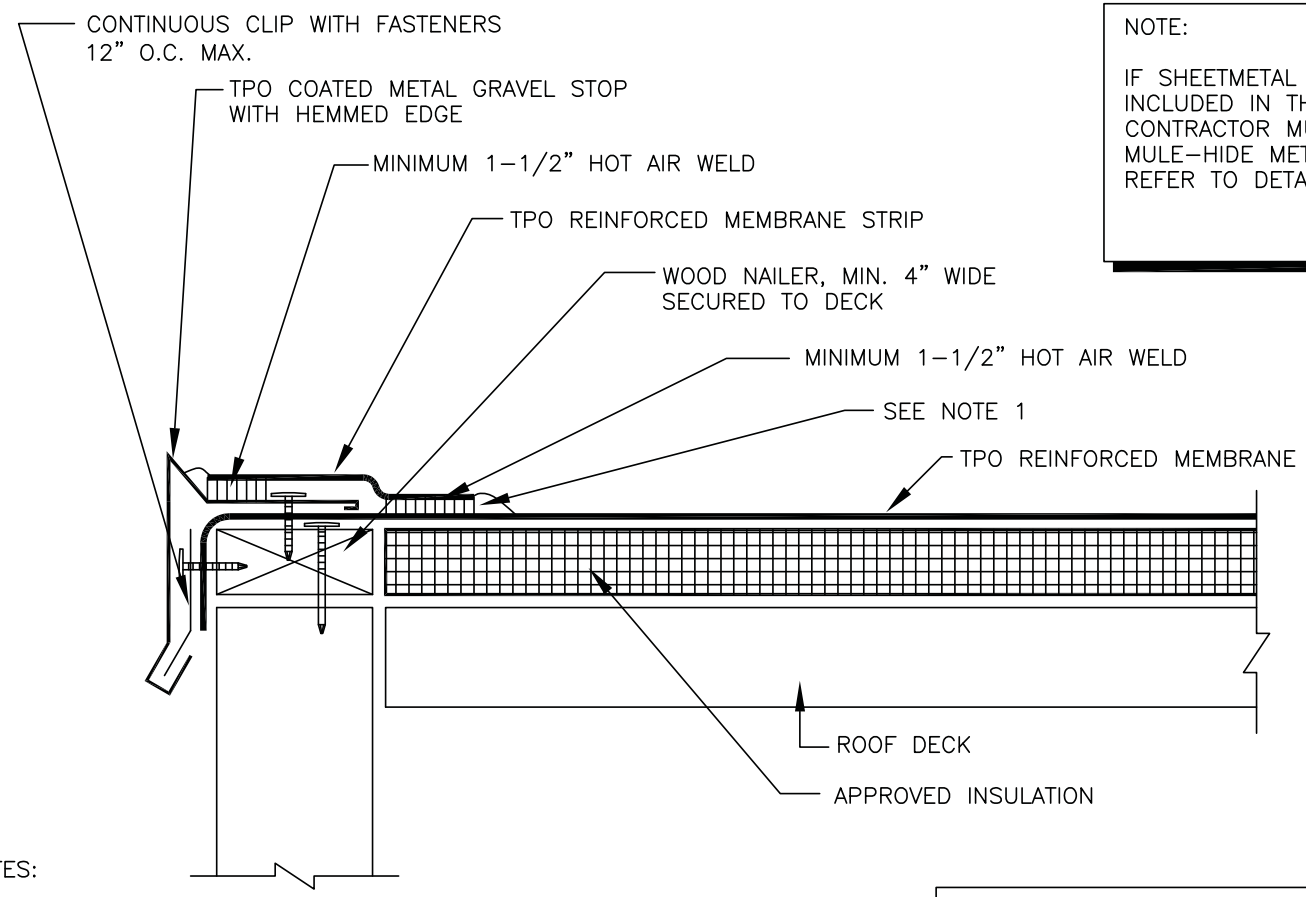

NOTE:

IF SHEETMETAL IS TO BE INCLUDED IN THE WARRANTY, CONTRACTOR MUST USE MULE-HIDE METAL PRODUCTS. REFER TO DETAIL MHT-3130.

NOTES:

1. APPROXIMATELY ⅛" DIAMETER BEAD OF CUT-EDGE SEALANT IS REQUIRED ON CUT EDGES OF TPO REINFORCED MEMBRANE.

2. SEE DETAIL MHT-UN-213 FOR INSTRUCTIONS TO SEAL JOINTS IN GRAVEL STOP.

NOTE:

THIS DETAIL IS ACCEPTABLE FOR USE IN A 20-YEAR WARRANTED SYSTEM

MULE-HIDE PRODUCTS CO., INC.	**GRAVEL STOP TPO COATED METAL**	**DETAIL NO.:**
	SYSTEMS:	**MHT-UN-211**
	ALL TPO SYSTEMS	REVISION DATE: 10/2013

®

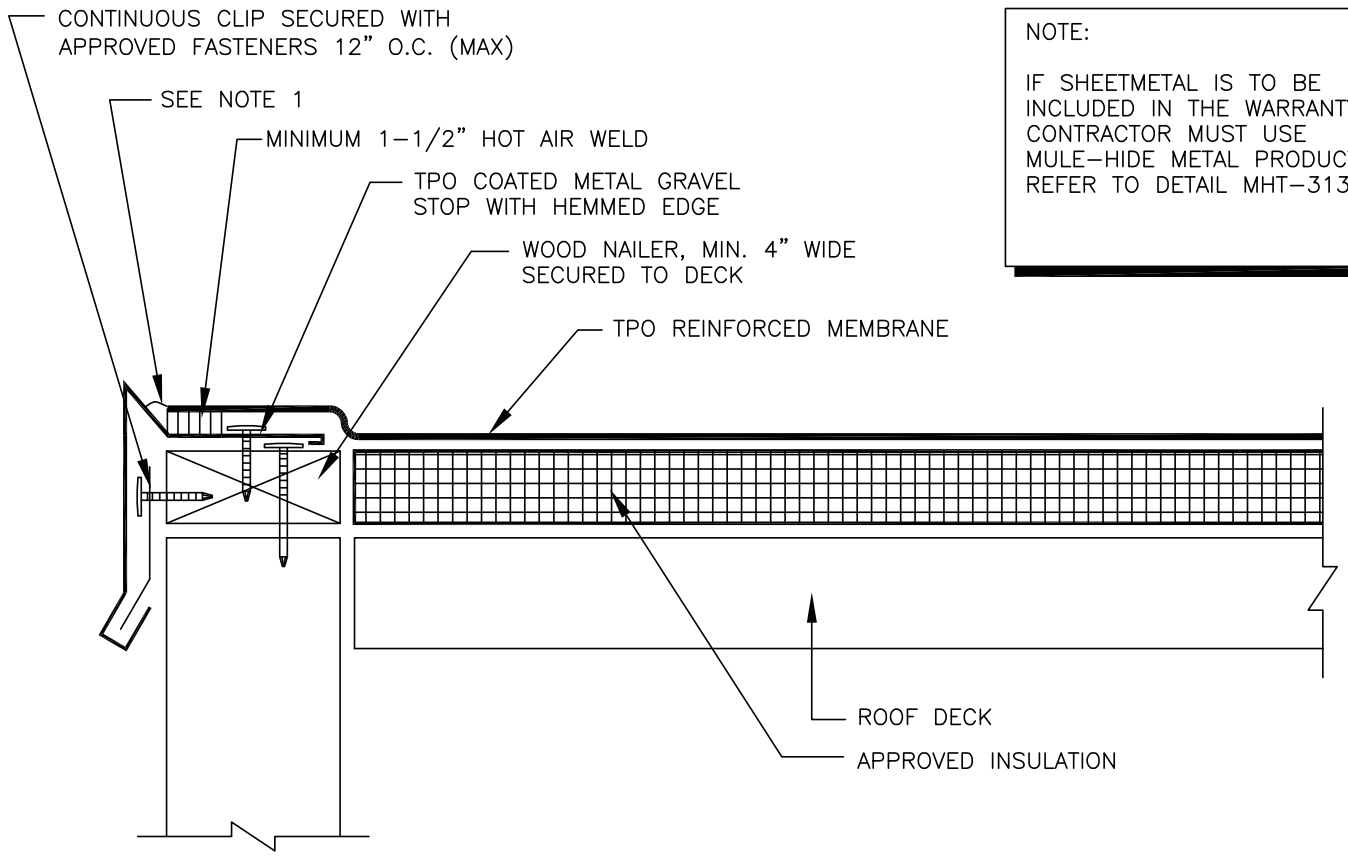

NOTE:

IF SHEETMETAL IS TO BE INCLUDED IN THE WARRANTY, CONTRACTOR MUST USE MULE-HIDE METAL PRODUCTS. REFER TO DETAIL MHT-3130.

NOTE:

THIS DETAIL IS NOT ACCEPTABLE FOR USE IN A 20-YEAR WARRANTED SYSTEM OR FOR EXTENDED WIND SPEED COVERAGE

NOTES:

1. APPROXIMATELY 1/8" DIAMETER BEAD OF CUT-EDGE SEALANT IS REQUIRED ON CUT EDGES OF TPO REINFORCED MEMBRANE.

MULE-HIDE PRODUCTS CO., INC.	**GRAVEL STOP TPO COATED METAL**	**DETAIL NO.:**
	SYSTEMS:	**MHT-UN-212**
	ALL TPO SYSTEMS	REVISION DATE: 10/2013

®

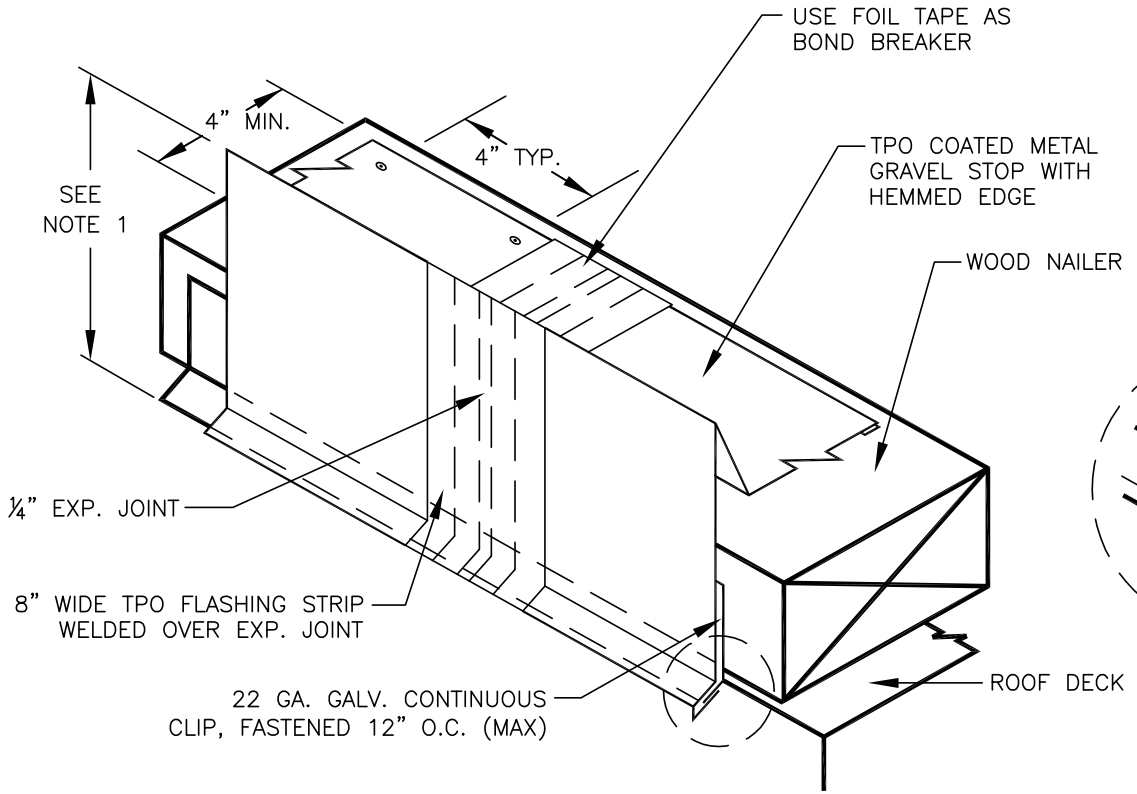

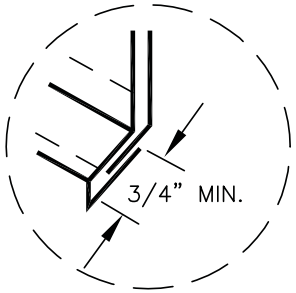

NOTE:

IF SHEETMETAL IS TO BE INCLUDED IN THE WARRANTY, CONTRACTOR MUST USE MULE-HIDE METAL PRODUCTS. REFER TO DETAIL MHT-3130.

NOTES:

1. MAXIMUM FACE DIMENSION SHOULD BE 5" TO PREVENT DISTORTION FROM "OIL CANNING". IF SURFACE DISTORTION IS ACCEPTABLE, FACE DIMENSION MAY BE INCREASED TO 8".
2. FOR FASCIAS GREATER THAN 8", INSTALL IN TWO SECTIONS.

NOTE:

USING THIS DETAIL IN CONJUNCTION WITH DETAIL MHT-UN-212 WILL NOT BE ACCEPTABLE FOR USE IN A 20-YEAR WARRANTED SYSTEM.

USING THIS DETAIL IN CONJUNCTION WITH DETAIL MHT-UN-211 WILL BE ACCEPTABLE FOR USE IN A 20-YEAR WARRANTED SYSTEM.

MULE-HIDE PRODUCTS CO., INC.	**GRAVEL STOP JOINT DETAIL TPO COATED METAL**	**DETAIL NO.:**
	SYSTEMS:	**MHT-UN-213**
	ALL TPO SYSTEMS	REVISION DATE: 10/2013

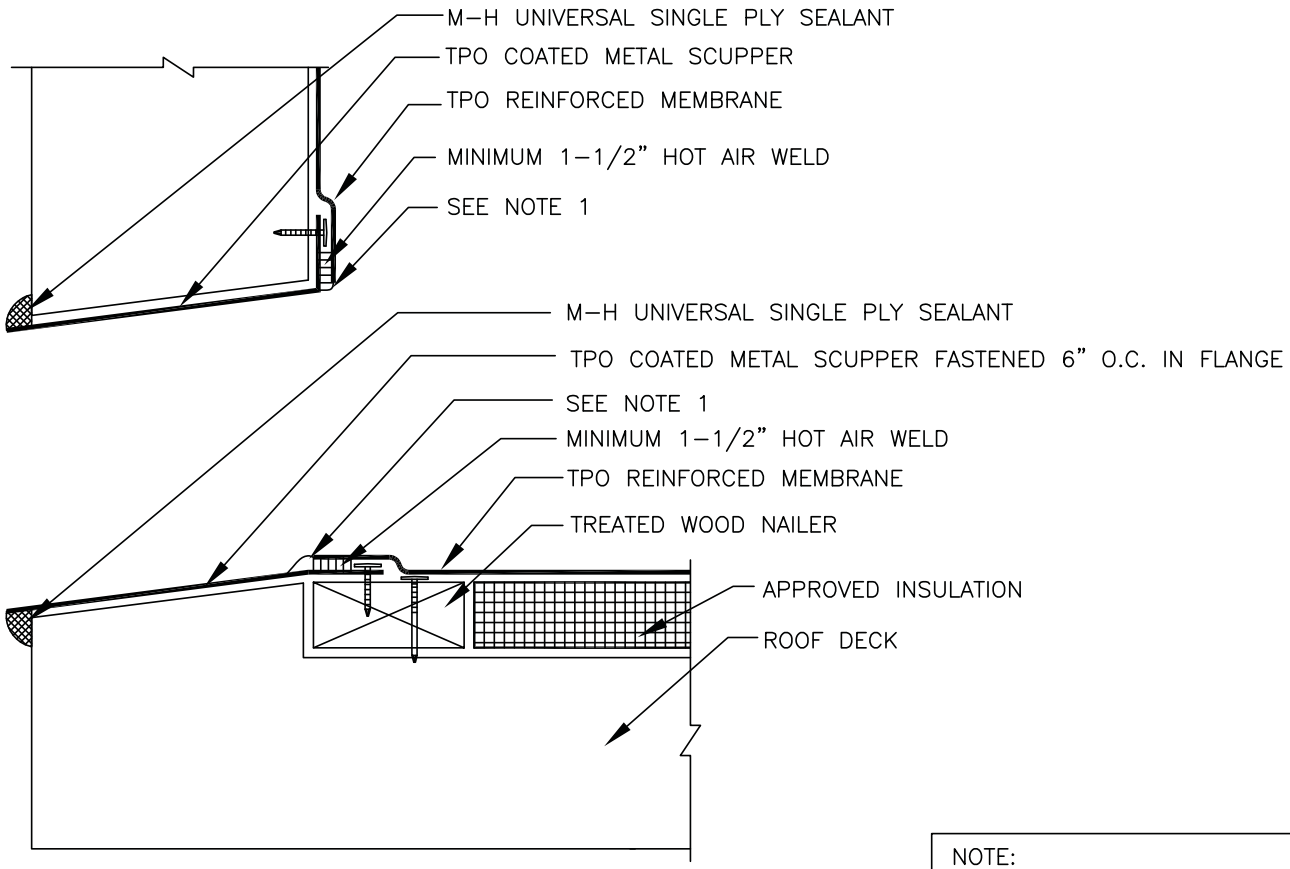

NOTES:

1. APPROXIMATELY ⅛" DIAMETER BEAD OF CUT–EDGE SEALANT IS REQUIRED ON CUT EDGES OF TPO REINFORCED MEMBRANE.

NOTE:

THIS DETAIL IS NOT ACCEPTABLE FOR USE IN A 20–YEAR WARRANTED SYSTEM. FOR A 20–YEAR WARRANTY USE DETAIL MHT–UN–220B

MULE-HIDE PRODUCTS CO., INC.	**THROUGH-WALL SCUPPER TPO COATED METAL**	**DETAIL NO.:**
	SYSTEMS:	**MHT-UN-220A**
	ALL TPO SYSTEMS	REVISION DATE: 10/2013

®

NOTES:

1. WOOD NAILER MUST EXTEND PAST TOTAL WIDTH OF DECK FLANGE.
2. INSTALL WALL FLASHING PRIOR TO SCUPPER INSTALLATION.
3. DISCONTINUE FASTENING PLATES AT SCUPPER OPENING AS SHOWN.
4. METAL SCUPPER BOX MUST HAVE CONTINUOUS SIDES; METAL FLANGE MUST BE CONTINUOUS WITH ROUNDED CORNERS.
5. WATER CUT-OFF MASTIC UNDER SCUPPER FLANGE MUST BE UNDER CONSTANT COMPRESSION.
6. MINIMUM 1-$\frac{1}{2}$" HOT AIR WELD FROM NAIL HEAD.
7. MULE-HIDE UNIVERSAL SINGLE PLY SEALANT IS REQUIRED AT FLASHING EDGE ON SCUPPER EDGE. MULE-HIDE TAPE PRIMER MUST BE USED TO PREPARE SURFACES PRIOR TO APPLYING UNIVERSAL SINGLE PLY SEALANT.

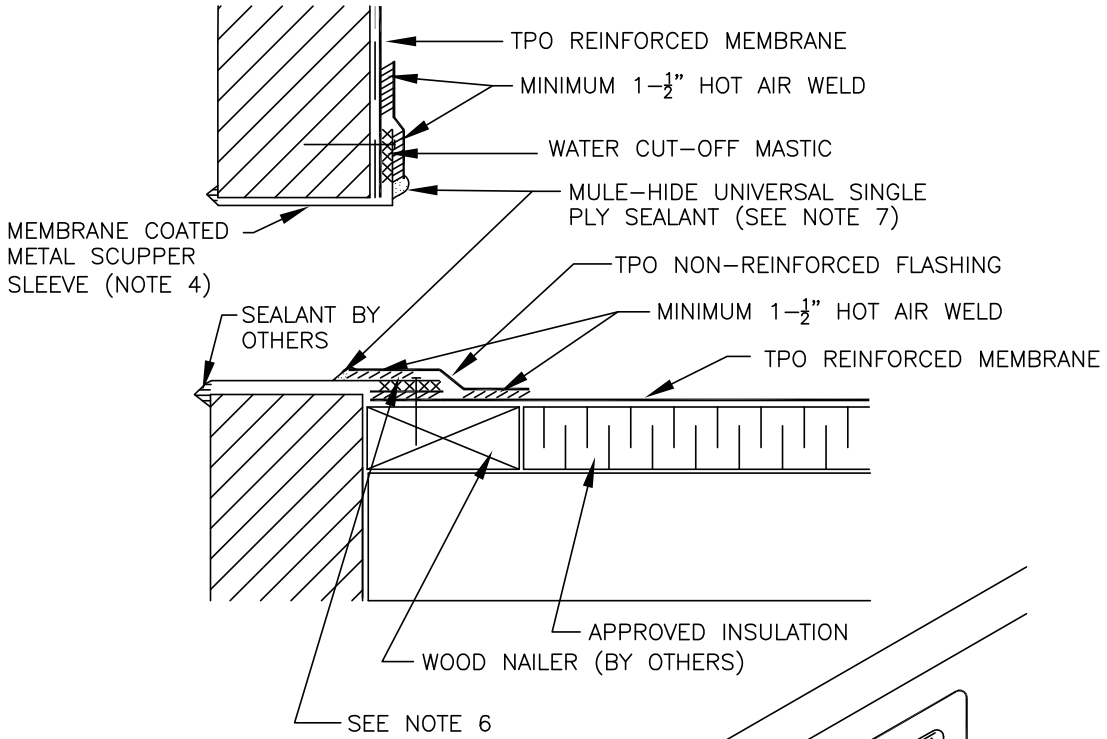

NOTE:

THIS DETAIL IS ACCEPTABLE FOR USE IN A 20-YEAR WARRANTED SYSTEM

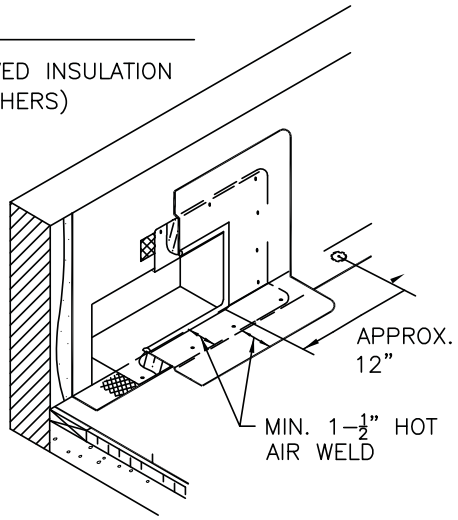

MULE-HIDE PRODUCTS CO., INC.	**THROUGH-WALL SCUPPER TPO COATED METAL SYSTEMS:** **ALL TPO SYSTEMS**	**DETAIL NO.:** **MHT-UN-220B** REVISION DATE: 10/2013

®

NOTES:

1. WOOD NAILER MUST EXTEND PAST TOTAL WIDTH OF DECK FLANGE.
2. INSTALL WALL FLASHING PRIOR TO SCUPPER INSTALLATION.
3. DISCONTINUE FASTENING PLATES AT SCUPPER OPENING AS SHOWN.
4. METAL SCUPPER BOX MUST HAVE CONTINUOUS SIDES; METAL FLANGE MUST BE CONTINUOUS WITH ROUNDED CORNERS.
5. CLEAN METAL SCUPPER FLANGE WITH MULE–HIDE WEATHERED MEMBRANE CLEANER TO REMOVE ANY OILS BEFORE APPLYING MULE–HIDE TAPE PRIMER.
6. WATER CUT–OFF MASTIC UNDER SCUPPER FLANGE MUST BE UNDER CONSTANT COMPRESSION.
7. MINIMUM 2" SPLICE FROM NAIL HEAD.
8. MULE–HIDE UNIVERSAL SINGLE PLY SEALANT IS REQUIRED AT FLASHING EDGE ON SCUPPER EDGE. MULE–HIDE TAPE PRIMER MUST BE USED TO PREPARE SURFACES PRIOR TO APPLYING MULE–HIDE UNIVERSAL SINGLE PLY SEALANT.

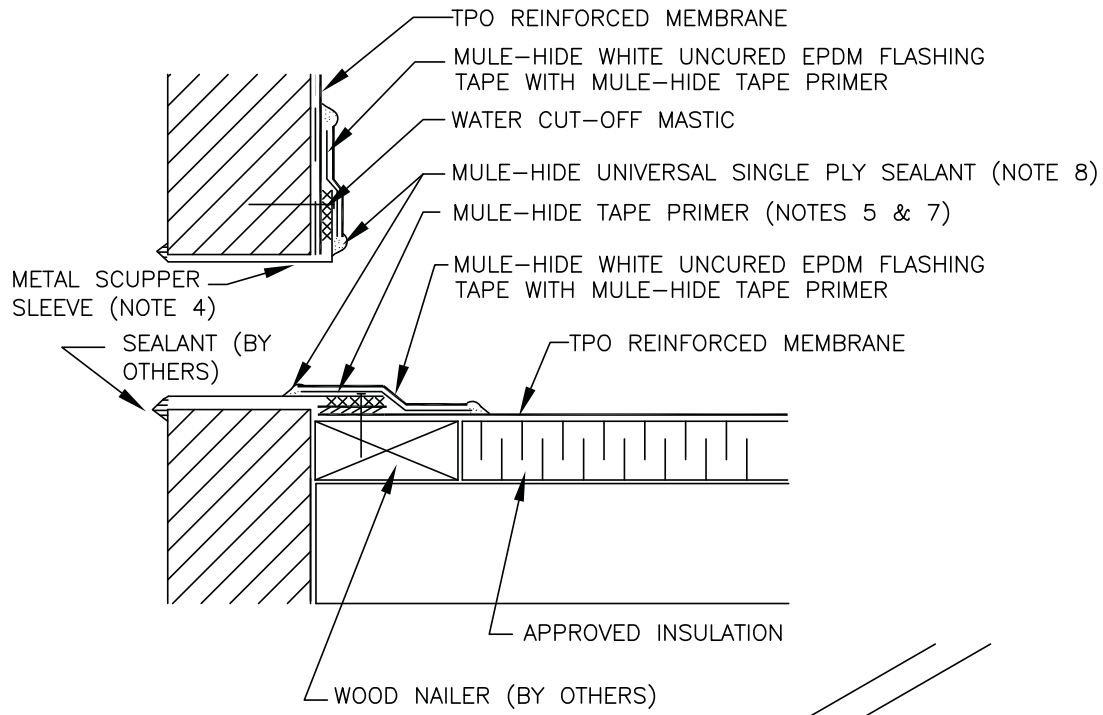

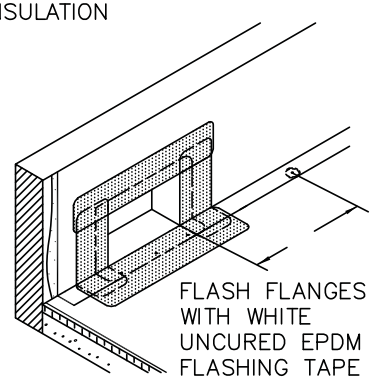

NOTE:

THIS DETAIL IS ACCEPTABLE FOR USE IN A 20–YEAR WARRANTED SYSTEM

MULE-HIDE PRODUCTS CO., INC.	**NEW METAL THROUGH-WALL SCUPPER WITH WHITE UNCURED EPDM** **SYSTEMS:** **ALL TPO SYSTEMS**	**DETAIL NO.:** **MHT-UN-220C** REVISION DATE: 10/2013

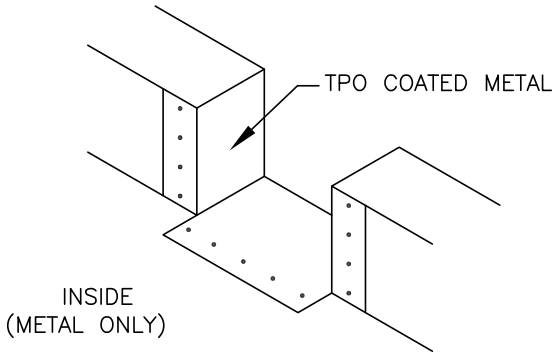

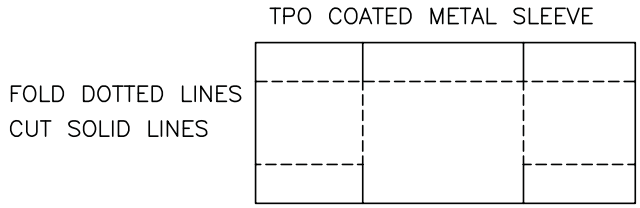

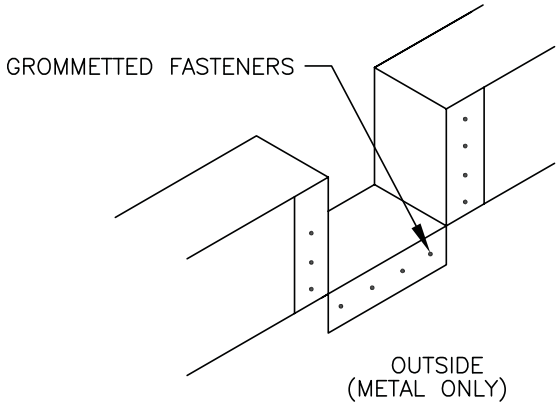

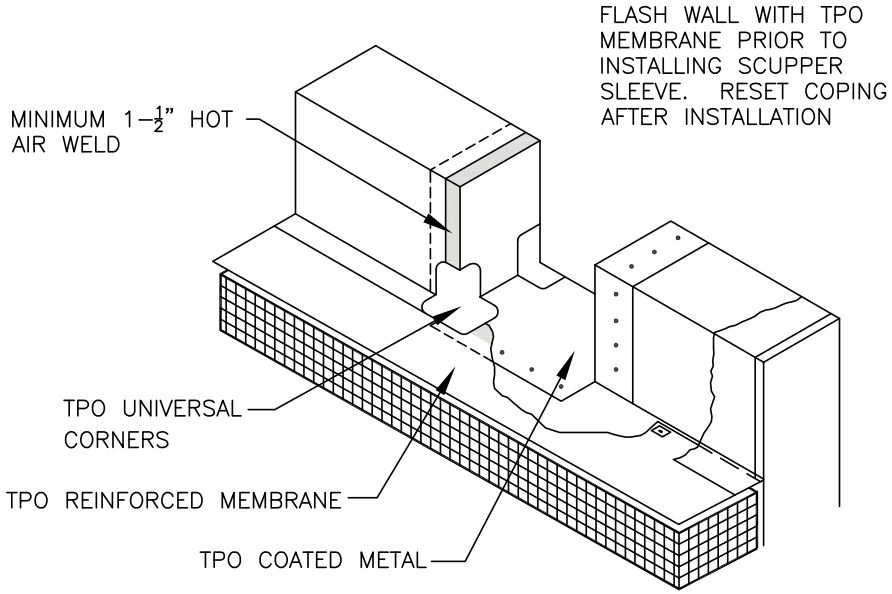

NOTE:

THIS DETAIL IS ACCEPTABLE FOR USE IN A 20-YEAR WARRANTED SYSTEM

MULE-HIDE PRODUCTS CO., INC.	**THROUGH-WALL OPEN SCUPPER TPO COATED METAL**	**DETAIL NO.:**
	SYSTEMS:	**MHT-UN-221**
	ALL TPO SYSTEMS	REVISION DATE: 10/2013

®

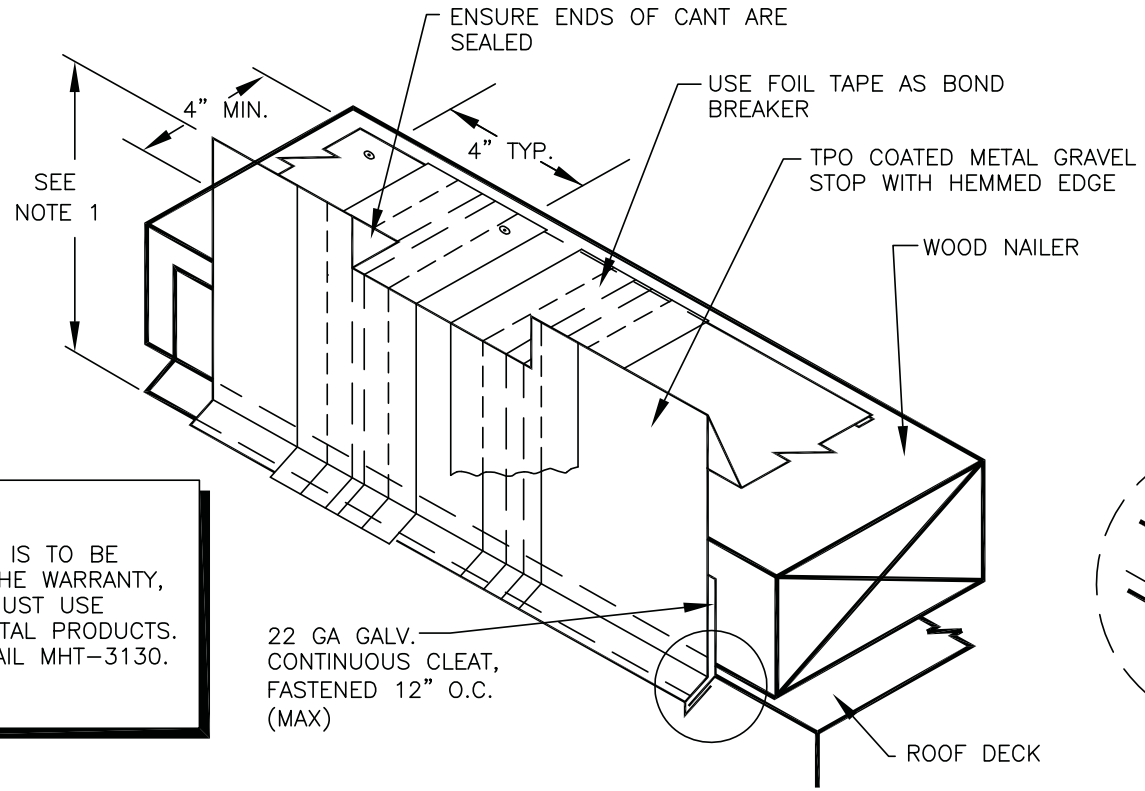

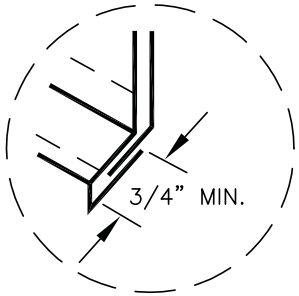

NOTE:

IF SHEETMETAL IS TO BE INCLUDED IN THE WARRANTY, CONTRACTOR MUST USE MULE–HIDE METAL PRODUCTS. REFER TO DETAIL MHT–3130.

NOTES:

1. MAXIMUM FACE DIMENSION SHOULD BE 5" TO PREVENT DISTORTION FROM "OIL CANNING." IF SURFACE DISTORTION IS ACCEPTABLE, FACE DIMENSION MAY BE INCREASED TO 8".
2. FOR FASCIAS GREATER THAN 8", INSTALL IN TWO SECTIONS.

NOTE:

USING THIS DETAIL IN CONJUNCTION WITH DETAIL MHT–UN–212 WILL NOT BE ACCEPTABLE FOR USE IN A 20–YEAR WARRANTED SYSTEM.

USING THIS DETAIL IN CONJUNCTION WITH DETAIL MHT–UN–211 WILL BE ACCEPTABLE FOR USE IN A 20–YEAR WARRANTED SYSTEM.

MULE-HIDE PRODUCTS CO., INC.	**GRAVEL STOP SCUPPER TPO COATED METAL**	**DETAIL NO.:**
	SYSTEMS:	**MHT-UN-222**
	ALL TPO SYSTEMS	REVISION DATE: 10/2013

®

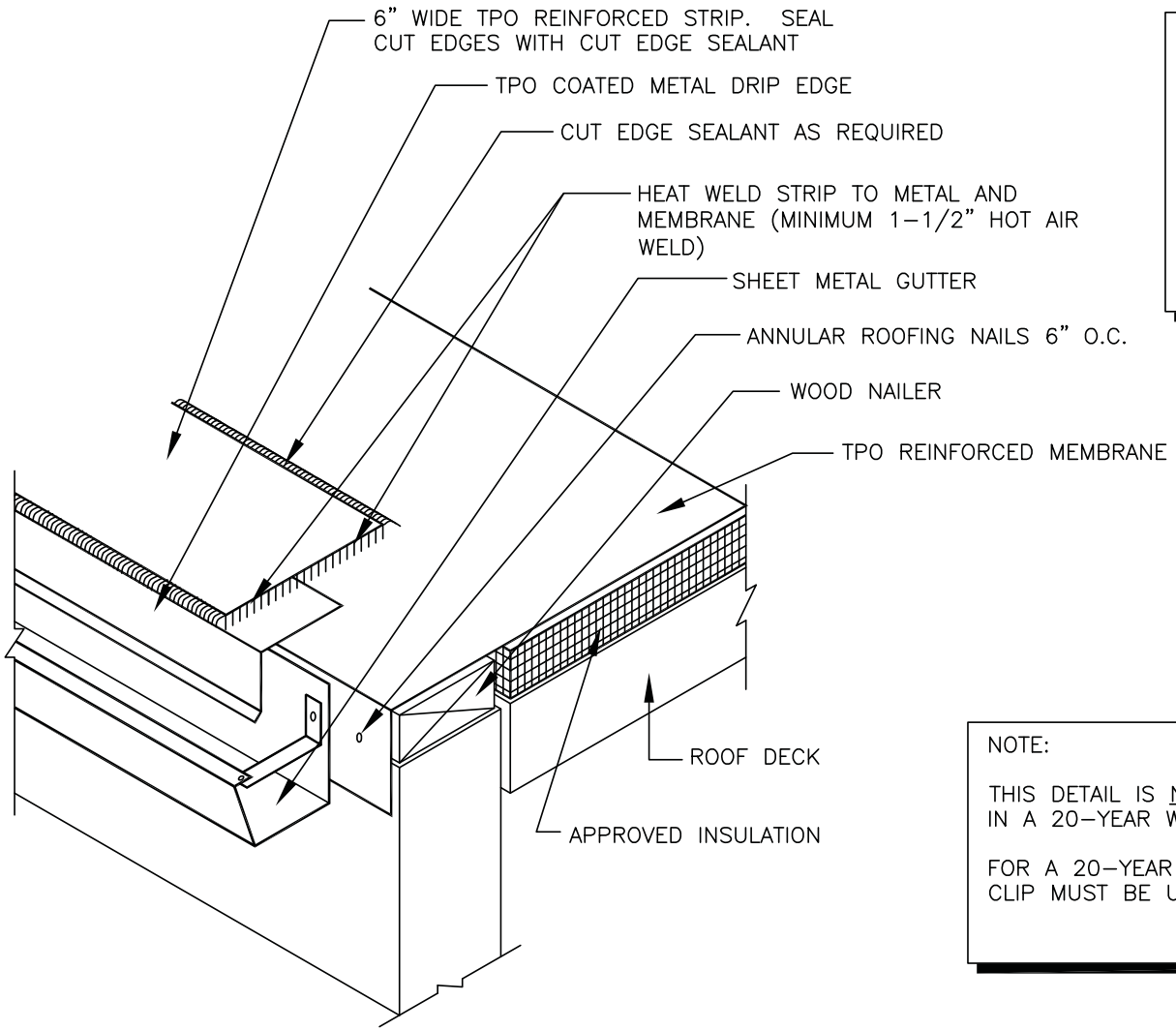

NOTE:

IF SHEETMETAL IS TO BE INCLUDED IN THE WARRANTY, CONTRACTOR MUST USE MULE-HIDE METAL PRODUCTS. REFER TO DETAILS MHSM-2091 AND MHT-3120.

NOTE:

THIS DETAIL IS NOT ACCEPTABLE FOR USE IN A 20-YEAR WARRANTED SYSTEM.

FOR A 20-YEAR WARRANTY, A CONTINUOUS CLIP MUST BE USED WITH THE DRIP EDGE.

MULE-HIDE PRODUCTS CO., INC.	**GUTTER DRIP EDGE TPO COATED METAL**	**DETAIL NO.:**
	SYSTEMS:	**MHT-UN-232**
	ALL TPO SYSTEMS	REVISION DATE: 10/2013

®

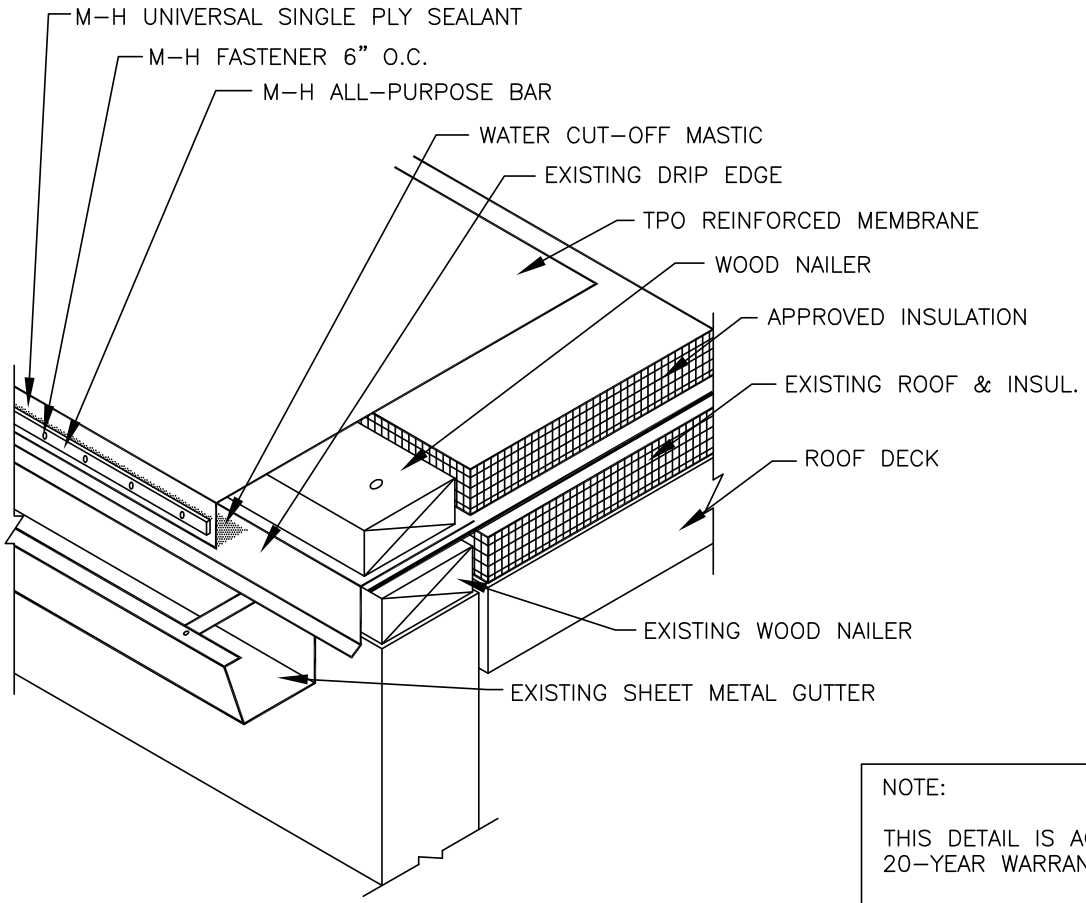

NOTE:

THIS DETAIL IS ACCEPTABLE FOR USE IN A 20–YEAR WARRANTED SYSTEM

MULE-HIDE PRODUCTS CO., INC.	**GUTTER / TERMINATION BAR RECOVER**	**DETAIL NO.:**
	SYSTEMS:	**MHT-UN-234**
	ALL RECOVER TPO SYSTEMS	REVISION DATE: 10/2013

®

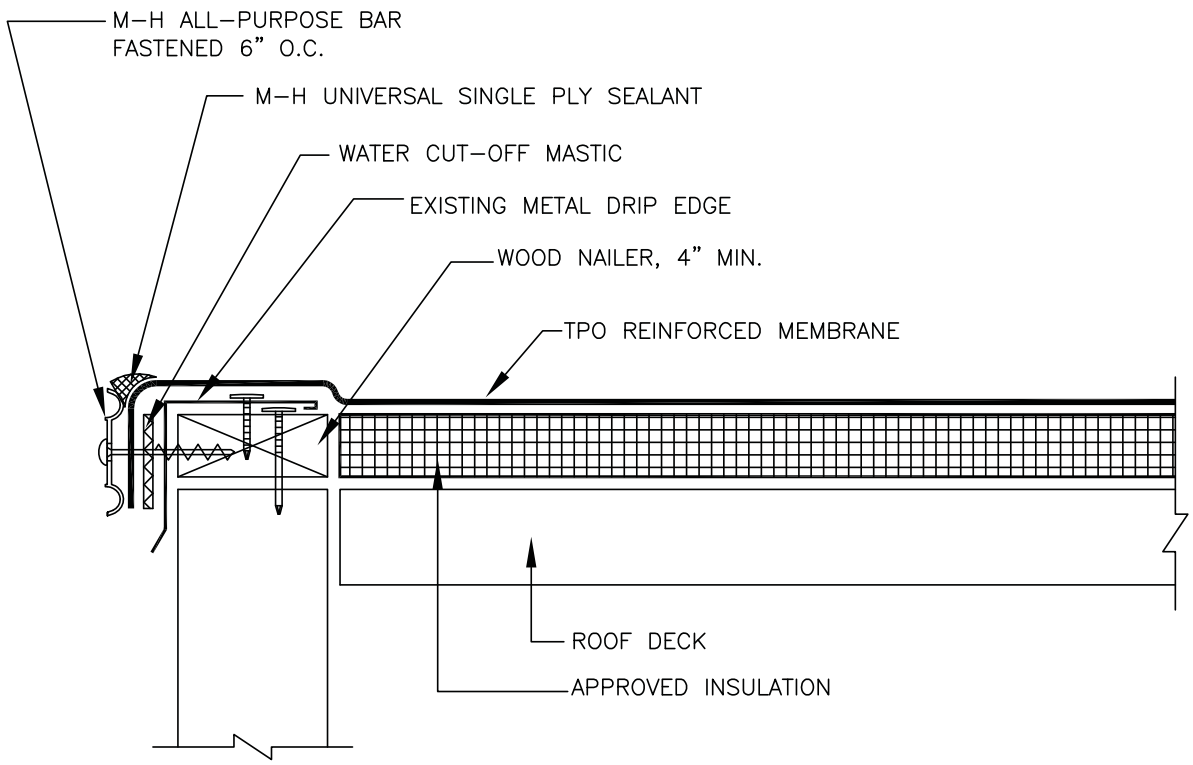

NOTE:

THIS DETAIL IS ACCEPTABLE FOR USE IN A 20–YEAR WARRANTED SYSTEM

MULE-HIDE PRODUCTS CO., INC.	**EDGE TERMINATION ALL-PURPOSE BAR**	**DETAIL NO.:**
	SYSTEMS:	**MHT-UN-240**
	ALL RECOVER TPO SYSTEMS	REVISION DATE: 10/2013

®

NOTE:

IF SHEETMETAL IS TO BE INCLUDED IN THE WARRANTY, CONTRACTOR MUST USE MULE–HIDE METAL PRODUCTS. REFER TO DETAILS MHSM–6050, MHSM–6052, MHSM–6054A&B, OR MHSM–6056..

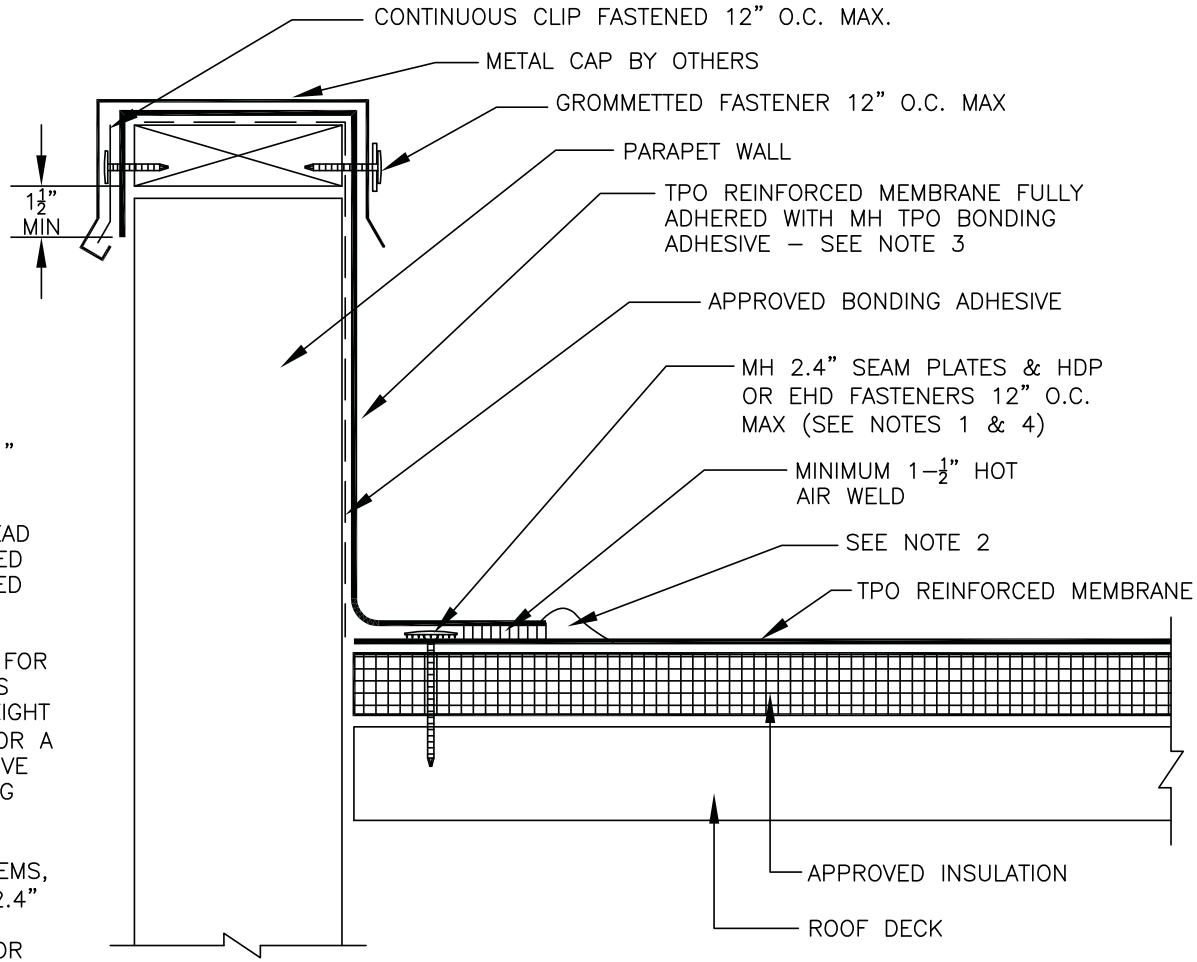

NOTES:

1. POSITION SEAM PLATES 1/2" TO 1" FROM EDGE OF DECK MEMBRANE.
2. APPROXIMATELY 1/8" DIAMETER BEAD OF CUT–EDGE SEALANT IS REQUIRED ON CUT EDGES OF TPO REINFORCED MEMBRANE.
3. WHEN COUNTERFLASHING IS USED FOR TERMINATION, BONDING ADHESIVE IS NOT REQUIRED WHEN FLASHING HEIGHT IS 12" OR LESS. WHEN COPING OR A TERMINATION BAR IS USED, ADHESIVE MAY BE ELIMINATED WHEN FLASHING HEIGHT IS 18" OR LESS.
4. ON MECHANICALLY FASTENED SYSTEMS, MH HDP OR EHD FASTNERS AND 2.4" SEAM PLATES ARE REQUIRED AS A MINIMUM. CONTACT MULE–HIDE FOR TPO REINFORCED MEMBRANE FASTENING CRITERIA AND PROPER FASTENERS FOR EACH DECK TYPE.

MULE-HIDE PRODUCTS CO., INC.	**PARAPET WALL METAL COPING CAP**	**DETAIL NO.:**
	SYSTEMS:	**MHT-UN-301**
	ALL TPO SYSTEMS	REVISION DATE: 10/2013

®

NOTE:

IF SHEETMETAL IS TO BE INCLUDED IN THE WARRANTY, CONTRACTOR MUST USE MULE-HIDE METAL PRODUCTS. REFER TO DETAILS MHSM-6050, MHSM-6052, MHSM-6054A & B, OR MHSM-6056..

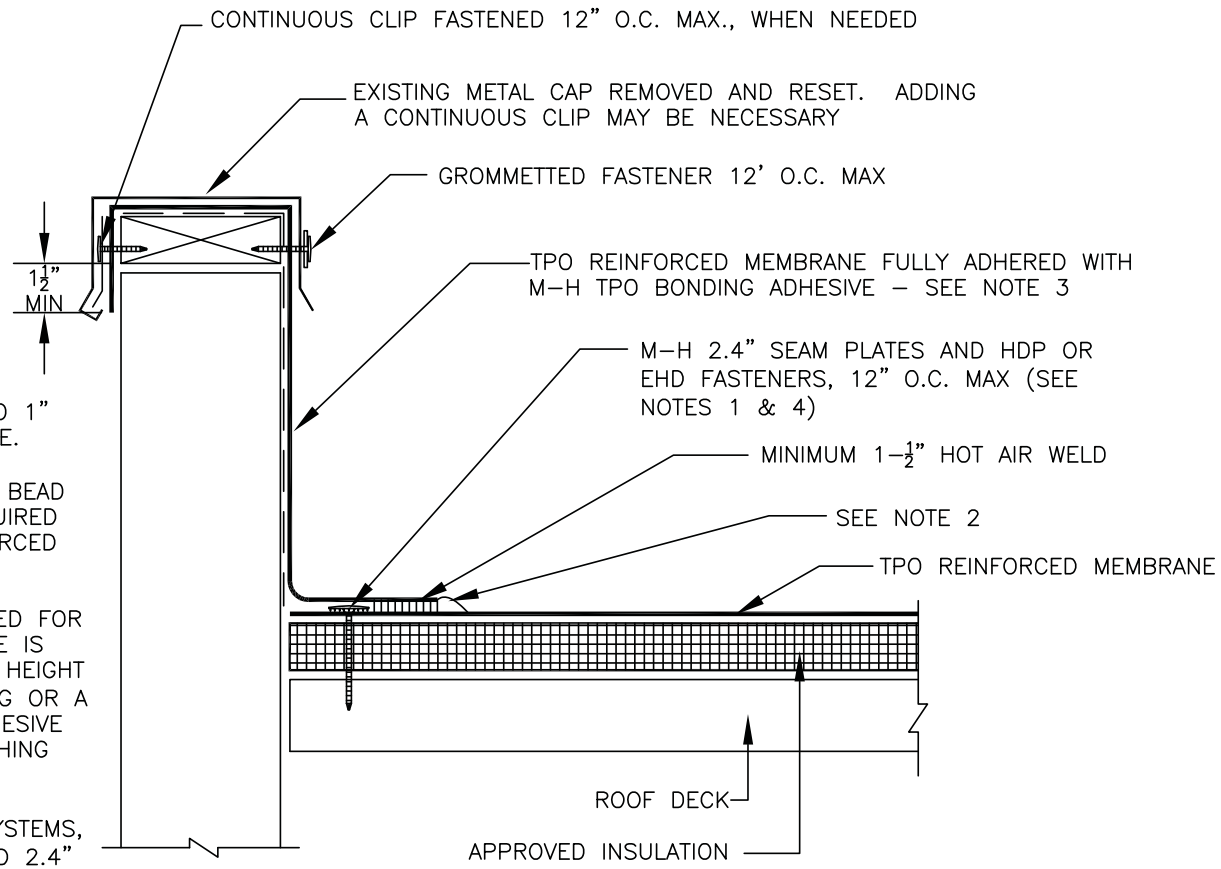

NOTES:

1. POSITION SEAM PLATES 1/2" TO 1" FROM EDGE OF DECK MEMBRANE.
2. APPROXIMATELY 1/8" DIAMETER BEAD OF CUT-EDGE SEALANT IS REQUIRED ON CUT EDGES OF TPO REINFORCED MEMBRANE.
3. WHEN COUNTERFLASHING IS USED FOR TERMINATION, BONDING ADHESIVE IS NOT REQUIRED WHEN FLASHING HEIGHT IS 12" OR LESS. WHEN COPING OR A TERMINATION BAR IS USED, ADHESIVE MAY BE ELIMINATED WHEN FLASHING HEIGHT IS 18" OR LESS.
4. ON MECHANICALLY FASTENED SYSTEMS, MH HDP OR EHD FASTNERS AND 2.4" SEAM PLATES ARE REQUIRED AS A MINIMUM. CONTACT MULE-HIDE FOR TPO REINFORCED MEMBRANE FASTENING CRITERIA AND PROPER FASTENERS FOR EACH DECK TYPE.

MULE-HIDE PRODUCTS CO., INC.	**PARAPET WALL EXISTING COPING CAP** **SYSTEMS:** **ALL TPO SYSTEMS**	**DETAIL NO.:** **MHT-UN-302** REVISION DATE: 10/2013

®

NOTE:

IF SHEETMETAL IS TO BE INCLUDED IN THE WARRANTY, CONTRACTOR MUST USE MULE–HIDE METAL PRODUCTS. REFER TO DETAILS MHSM–6050, MHSM–6052, MHSM–6054A & B, OR MHSM–6056..

NOTES:

1. POSITION SEAM PLATES 1/2" TO 1" FROM EDGE OF DECK MEMBRANE.
2. APPROXIMATELY 1/8" DIAMETER BEAD OF CUT–EDGE SEALANT IS REQUIRED ON CUT EDGES OF TPO REINFORCED MEMBRANE.
3. WHEN COUNTERFLASHING IS USED FOR TERMINATION, BONDING ADHESIVE IS NOT REQUIRED WHEN FLASHING HEIGHT IS 12" OR LESS. WHEN COPING OR A TERMINATION BAR IS USED, ADHESIVE MAY BE ELIMINATED WHEN FLASHING HEIGHT IS 18" OR LESS.
4. ON MECHANICALLY FASTENED SYSTEMS, MH HDP OR EHD FASTNERS AND 2.4" SEAM PLATES ARE REQUIRED AS A MINIMUM. CONTACT MULE–HIDE FOR TPO REINFORCED MEMBRANE FASTENING CRITERIA AND PROPER FASTENERS FOR EACH DECK TYPE.

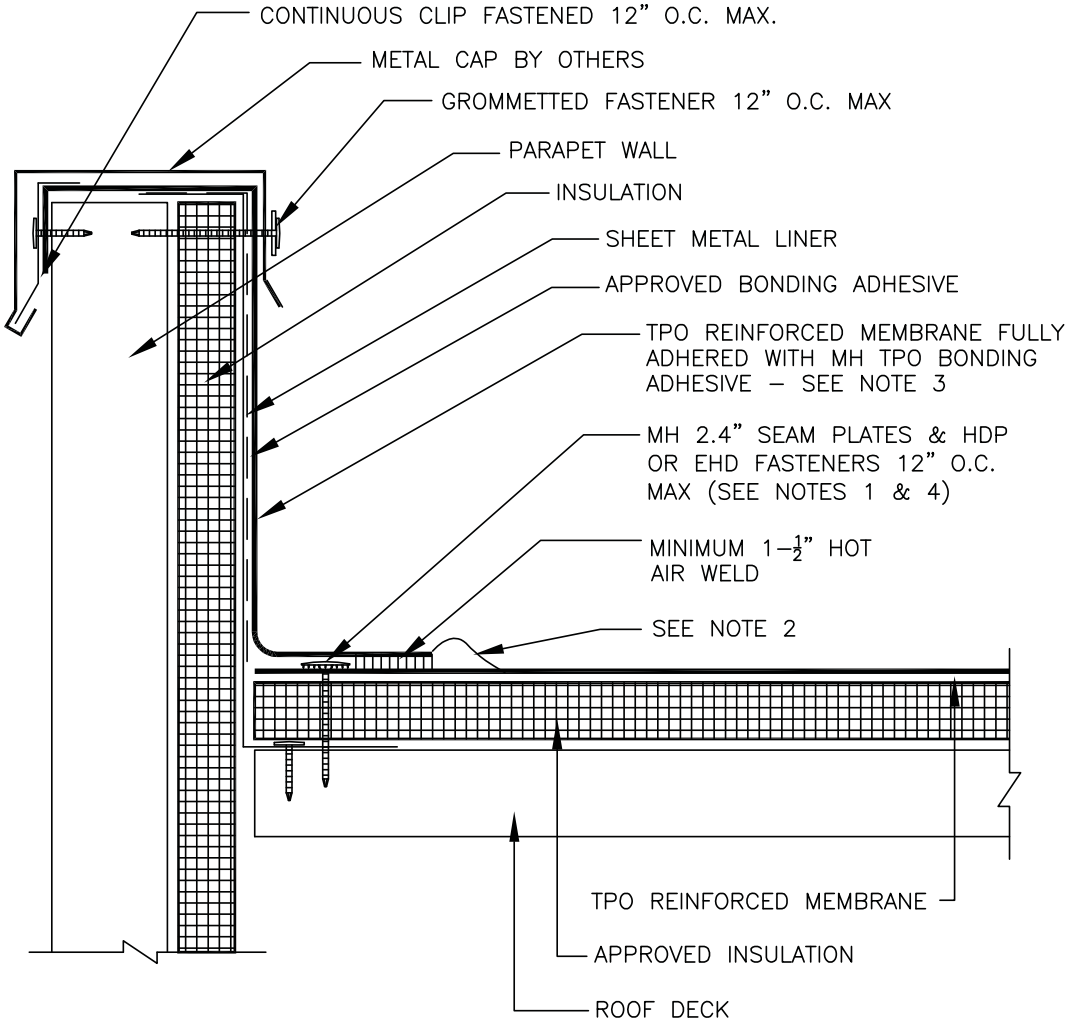

MULE-HIDE PRODUCTS CO., INC.	INSULATED PARAPET WALL WITH METAL COPING CAP SYSTEMS: ALL TPO SYSTEMS	DETAIL NO.: MHT-UN-303 REVISION DATE: 10/2013

®

NOTES:

1. POSITION SEAM PLATES 1/2" TO 1" FROM EDGE OF DECK MEMBRANE.

2. APPROXIMATELY 1/8" DIAMETER BEAD OF CUT–EDGE SEALANT IS REQUIRED ON CUT EDGES OF TPO REINFORCED MEMBRANE.

3. WHEN COUNTERFLASHING IS USED FOR TERMINATION, BONDING ADHESIVE IS NOT REQUIRED WHEN FLASHING HEIGHT IS 12" OR LESS. WHEN COPING OR A TERMINATION BAR IS USED, ADHESIVE MAY BE ELIMINATED WHEN FLASHING HEIGHT IS 18" OR LESS.

4. ON MECHANICALLY FASTENED SYSTEMS, MH HDP OR EHD FASTNERS AND 2.4" SEAM PLATES ARE REQUIRED AS A MINIMUM. CONTACT MULE–HIDE FOR TPO REINFORCED MEMBRANE FASTENING CRITERIA AND PROPER FASTENERS FOR EACH DECK TYPE.

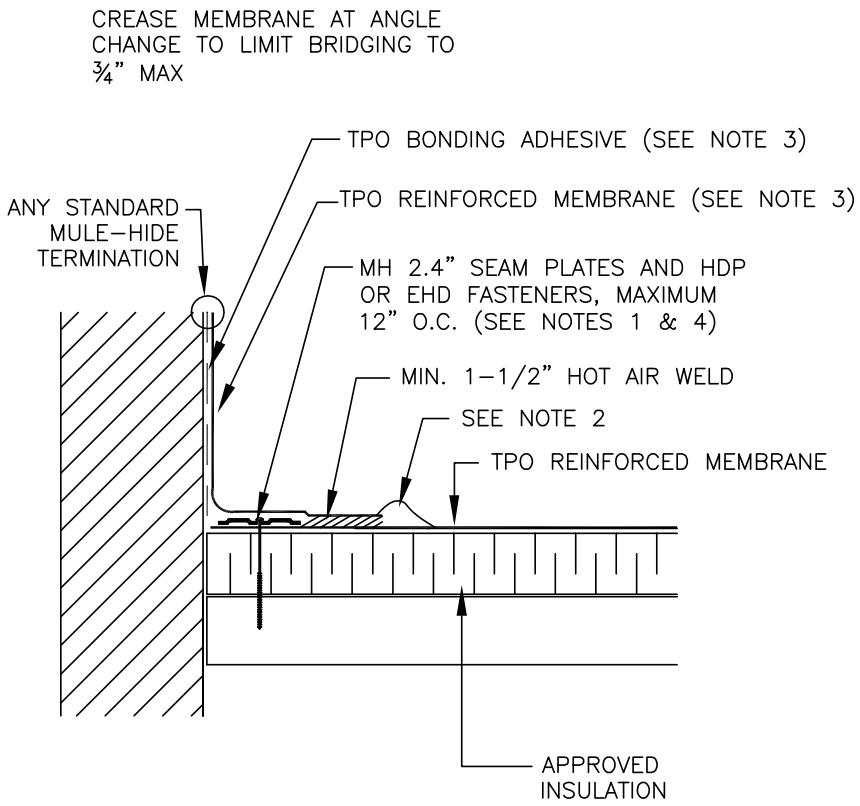

MULE-HIDE PRODUCTS CO., INC.	**BASE ATTACHMENT WITH PLATES AND FASTENERS** **SYSTEMS:** **ALL TPO SYSTEMS**	**DETAIL NO.:** **MHT-UN-305A** REVISION DATE: 10/2013

®

NOTES:

1. ON MECHANICALLY FASTENED SYSTEMS, MH HDP OR EHD FASTENERS AND 2.4" SEAM PLATES ARE REQUIRED AS A MINIMUM. CONTACT MULE-HIDE FOR TPO REINFORCED MEMBRANE FASTENING CRITERIA AND PROPER FASTENERS FOR EACH DECK TYPE.

2. WHEN COUNTERFLASHING IS USED FOR TERMINATION, BONDING ADHESIVE IS NOT REQUIRED WHEN FLASHING HEIGHT IS 12" OR LESS. WHEN COPING OR TERMINATION BAR IS USED, ADHESIVE MAY BE ELIMINATED WHEN FLASHING HEIGHT IS 18" OR LESS.

3. RUSS PRODUCTS CANNOT BE USED ON FLEECEBACK OR SELF ADHERING MEMBRANES.

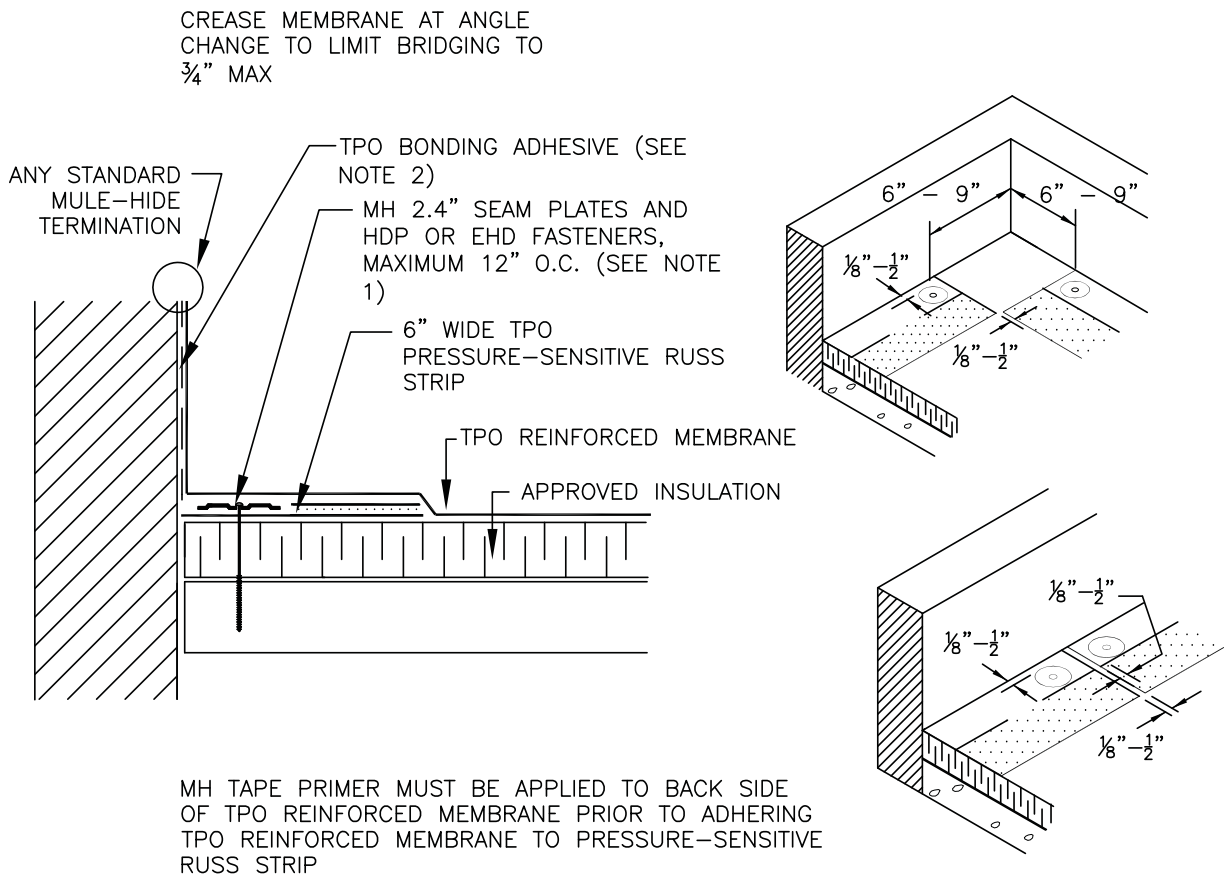

MH TAPE PRIMER MUST BE APPLIED TO BACK SIDE OF TPO REINFORCED MEMBRANE PRIOR TO ADHERING TPO REINFORCED MEMBRANE TO PRESSURE-SENSITIVE RUSS STRIP

MULE-HIDE PRODUCTS CO., INC.	**BASE ATTACHMENT USING 6" RUSS**	**DETAIL NO.:**
	SYSTEMS: ALL TPO SYSTEMS EXCEPT FLEECEBACK AND SELF ADHERING	**MHT-UN-305B**
		REVISION DATE: 10/2013

®

CREASE MEMBRANE AT ANGLE CHANGE TO LIMIT BRIDGING TO ¾" MAX

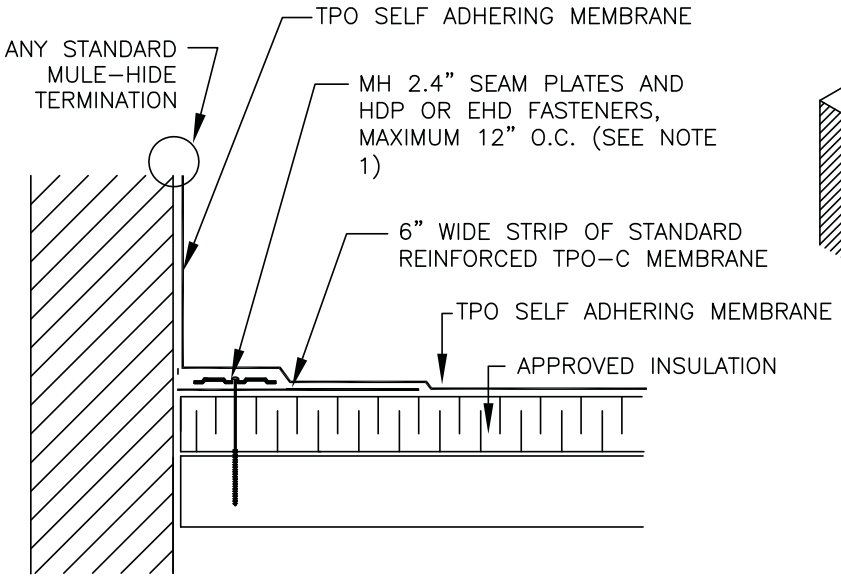

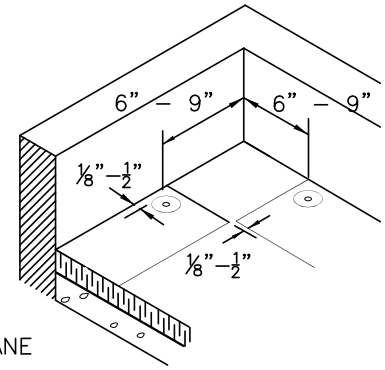

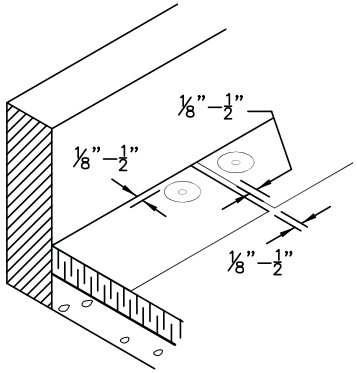

NOTES:

1. CONTACT MULE–HIDE FOR FASTENING CRITERIA AND PROPER FASTENERS FOR EACH DECK TYPE.
2. RUSS PRODUCTS CANNOT BE USED ON FLEECEBACK OR SELF ADHERING MEMBRANES.

MH TPO PRIMER IS NOT NEEDED TO PREPARE THE 6" STRIP OF STANDARD REINFORCED TPO–C MEMBRANE. HOWEVER, THE 6" STRIP OF STANDARD REINFORCED TPO–C MEMBRANE MUST BE CLEAN AND DRY.

MULE-HIDE PRODUCTS CO., INC.	**BASE ATTACHMENT USING 6" STANDARD TPO-C MEMBRANE**	**DETAIL NO.:**
	SYSTEMS: TPO SELF ADHERING SYSTEMS ONLY	**MHT-FA-305C**
		REVISION DATE: 3/2014

®

NOTES:

1. DETAILS TO BE USED IN CONJUNCTION WITH STANDARD GUIDE SPECIFICATIONS CONTAINING REQUIREMENTS FOR NAILERS, INSULATION, SLIPSHEETS, ETC.

2. ACCORDING TO PROJECT CONDITIONS, THE SPECIFIER AND/OR APPLICATOR MUST IDENTIFY THE WIDTH DIMENSIONS OF THE ROOF PERIMETERS AND CORNERS IN ACCORDANCE WITH FM DATA SHEETS 1–28 AND 1–29 BASED UPON THE FOLLOWING FORMULA:

   - 0.4 TIMES THE BUILDING HEIGHT OR
   - 0.1 TIMES THE BUILDING'S LESSER PLAN DIMENSION, WHICHEVER IS SMALLER

   THE MINIMUM PERIMETER/CORNER WIDTH SHALL BE NO LESS THAN 3 FEET

3. FOR STEEL DECKS:
   - ALL FASTENERS MUST ENGAGE TOP FLUTES OF DECK
   - IN THE FIELD OF THE ROOF, SEAMS (FASTENER ROWS) MUST RUN PERPENDICULAR TO THE DECK FLUTES
   - PERIMETER HALF SHEETS ARE TO BE USED ONLY ON SIDES OF ROOF WHEN THE SEAMS RUN PERPENDICULAR TO THE DECK FLUTES

4. 10" WIDE TPO PRESSURE–SENSITIVE RUSS CAN BE USED BENEATH FIELD SHEETS IN LIEU OF FASTENERS AND PLATES INSTALLED THROUGH THE MEMBRANE OR PERIMETER HALF SHEETS.

5. USE ADDITIONAL HALF SHEETS INSTALLED WITH SEAMS RUNNING PERPENDICULAR TO THE DECK FLUTES TO MEET OR SLIGHTLY EXCEED FM PERIMETER DIMENSION REQUIREMENTS AS OUTLINED IN NOTE 2 ABOVE. EXAMPLE: A 14' PERIMETER DIMENSION WOULD REQUIRE FOUR 4' PERIMETER SHEETS (14' DIVIDED BY 3'6" COVERAGE PROVIDED BY A 4' WIDE SHEET)

REFER TO MULE–HIDE TECHNICAL BULLETIN #TPO–MA02–2006 FOR PERIMETER ENHANCEMENT REQUIREMENTS

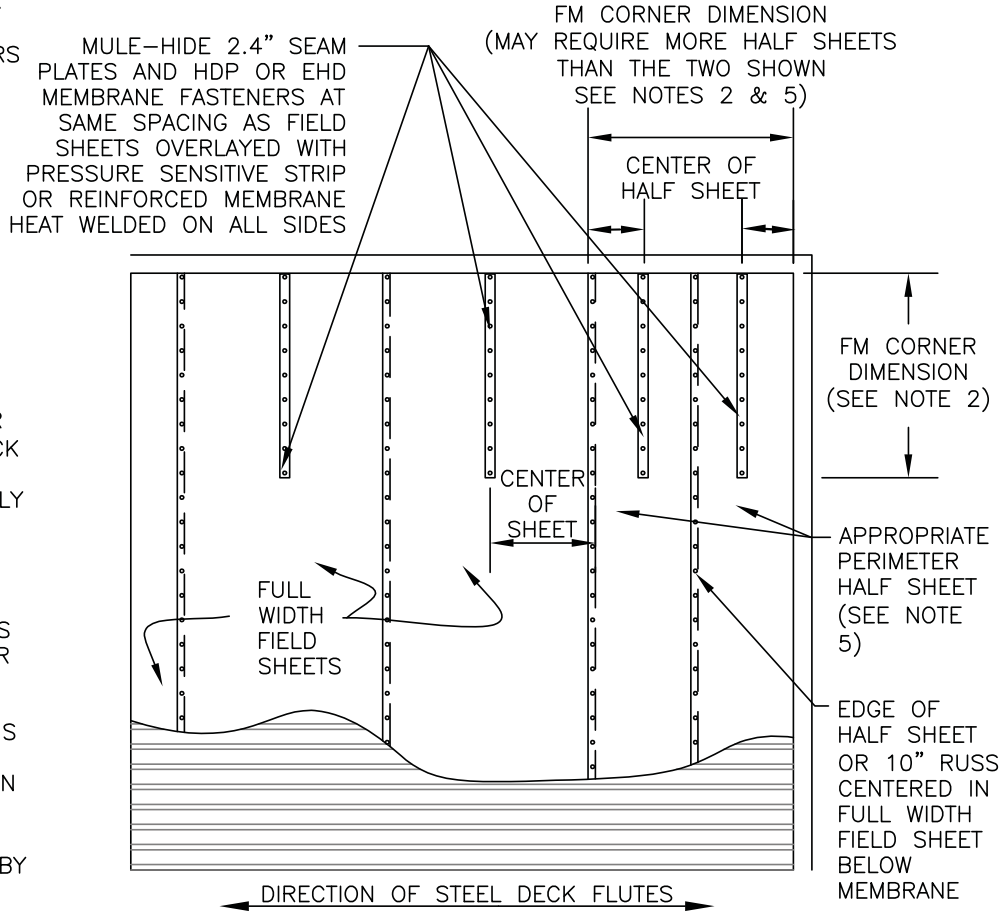

MULE-HIDE PRODUCTS CO., INC.	**FM CORNER / PERIMETER FASTENING ENHANCEMENTS - OPTION A** **SYSTEMS:** **TPO MECHANICALLY ATTACHED**	**DETAIL NO.:** **MHT-FM-308A** REVISION DATE: 10/2013

®

NOTES:

1. DETAILS TO BE USED IN CONJUNCTION WITH STANDARD GUIDE SPECIFICATIONS CONTAINING REQUIREMENTS FOR NAILERS, INSULATION, SLIPSHEETS, ETC.

2. ACCORDING TO PROJECT CONDITIONS, THE SPECIFIER AND/OR APPLICATOR MUST IDENTIFY THE WIDTH DIMENSIONS OF THE ROOF PERIMETERS AND CORNERS IN ACCORDANCE WITH FM DATA SHEETS 1–28 AND 1–29 BASED UPON THE FOLLOWING FORMULA:

   - 0.4 TIMES THE BUILDING HEIGHT OR
   - 0.1 TIMES THE BUILDING'S LESSER PLAN DIMENSION, WHICHEVER IS SMALLER

   THE MINIMUM PERIMETER/CORNER WIDTH SHALL BE NO LESS THAN 3 FEET

3. FOR STEEL DECKS:
   - ALL FASTENERS MUST ENGAGE TOP FLUTES OF DECK
   - IN THE FIELD OF THE ROOF, SEAMS (FASTENER ROWS) MUST RUN PERPENDICULAR TO THE DECK FLUTES
   - PERIMETER HALF SHEETS ARE TO BE USED ONLY WHEN THE SEAMS RUN PERPENDICULAR TO THE DECK FLUTES

4. 10" WIDE TPO PRESSURE–SENSITIVE RUSS CAN BE USED BENEATH FIELD OR PERIMETER SHEETS IN LIEU OF FASTENERS AND PLATES INSTALLED THROUGH THE MEMBRANE.

5. USE ADDITIONAL HALF SHEETS INSTALLED WITH SEAMS RUNNING PERPENDICULAR TO THE DECK FLUTES TO MEET OR SLIGHTLY EXCEED FM PERIMETER DIMENSION REQUIREMENTS AS OUTLINED IN NOTE 2 ABOVE. EXAMPLE: A 14' PERIMETER DIMENSION WOULD REQUIRE FOUR 4' PERIMETER SHEETS (14' DIVIDED BY 3'6" COVERAGE PROVIDED BY A 4' WIDE SHEET)

6.

REFER TO MULE–HIDE TECHNICAL BULLETIN #TPO–MA02–2006 FOR PERIMETER ENHANCEMENT REQUIREMENTS

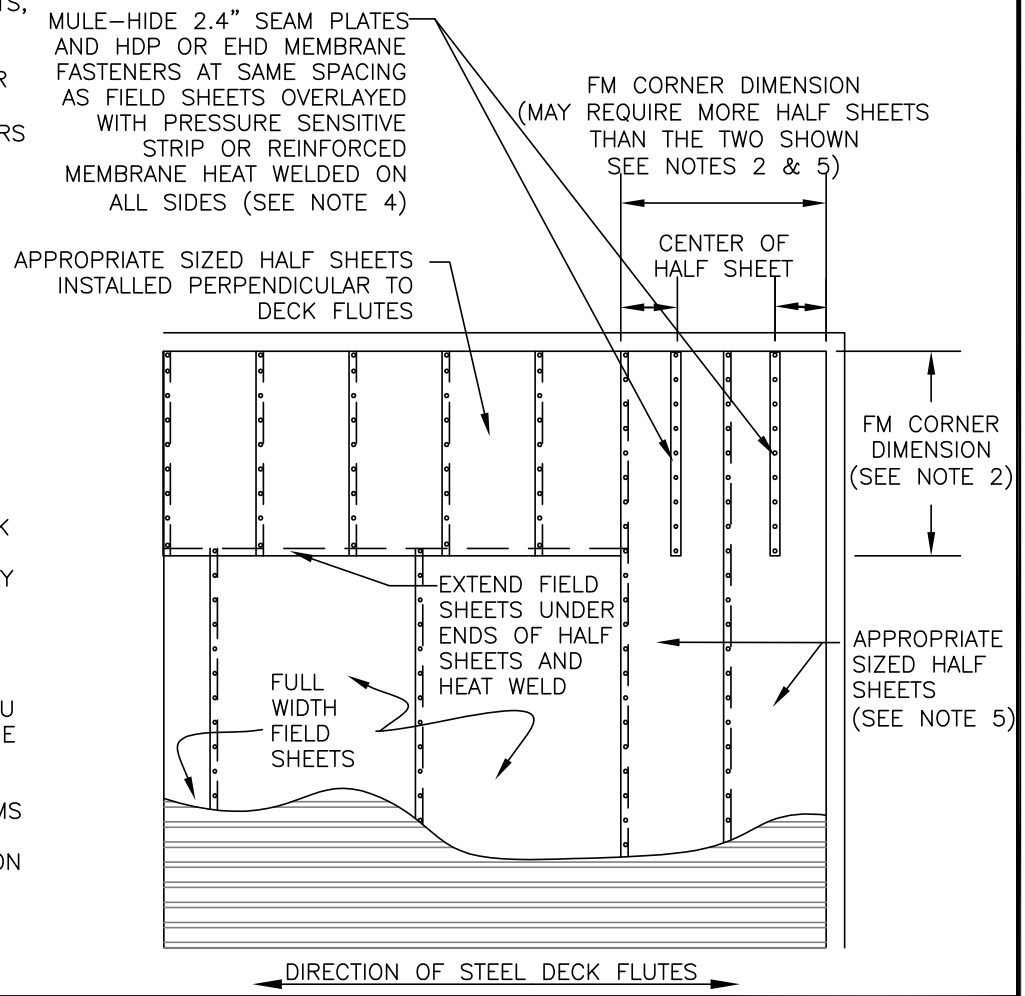

MULE-HIDE PRODUCTS CO., INC.	**FM CORNER / PERIMETER FASTENING ENHANCEMENTS - OPTION B** **SYSTEMS:** **TPO MECHANICALLY ATTACHED**	**DETAIL NO.:** **MHT-FM-308B** REVISION DATE: 10/2013

®

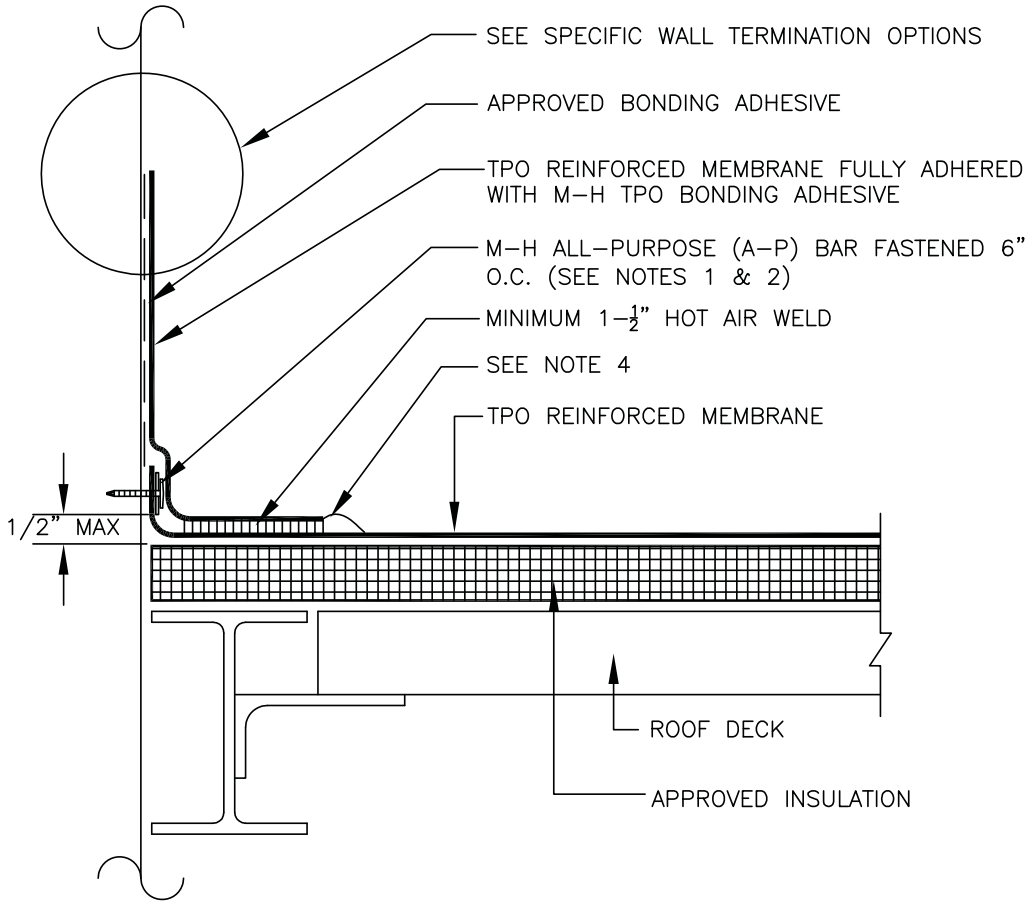

NOTES:

1. USE ONLY WHEN IT IS NOT POSSIBLE TO FASTEN HORIZONTALLY AT BASE OF PARAPET. M–H 2.4" SEAM PLATES MAY BE INSTALLED VERTICALLY AS AN OPTION TO USING THE ALL–PURPOSE BAR. PLATES MUST NOT EXCEED 12" O.C. BOTTOM OF AP BAR OR 2.4" PLATES MUST BE WITHIN 1/2" OF ANGLE CHANGE.
2. WHEN AP BAR IS USED IN LIEU OF 2.4" SEAM PLATES AND HDP OR EHD FASTENERS, THE "BUMPS" ARE INSTALLED UP.
3. WALL FASTENERS MUST ACHIEVE MINIMUM PULLOUT RESISTANCE OF 250 LBS.
4. APPROXIMATELY 1/8" DIAMETER BEAD OF CUT–EDGE SEALANT IS REQUIRED ON CUT EDGES OF TPO REINFORCED MEMBRANE.
5. ALL EXISTING FLASHINGS AND CANTS MUST BE REMOVED DOWN TO THE SUBSTRATE.

MULE-HIDE PRODUCTS CO., INC.	**BASE ATTACHMENT ALL-PURPOSE BAR**	**DETAIL NO.:**
	SYSTEMS:	**MHT-UN-330**
	ALL TPO SYSTEMS	REVISION DATE: 11/2014

®

NOTE:

THIS DETAIL IS NOT ACCEPTABLE FOR USE IN A 20–YEAR WARRANTED SYSTEM

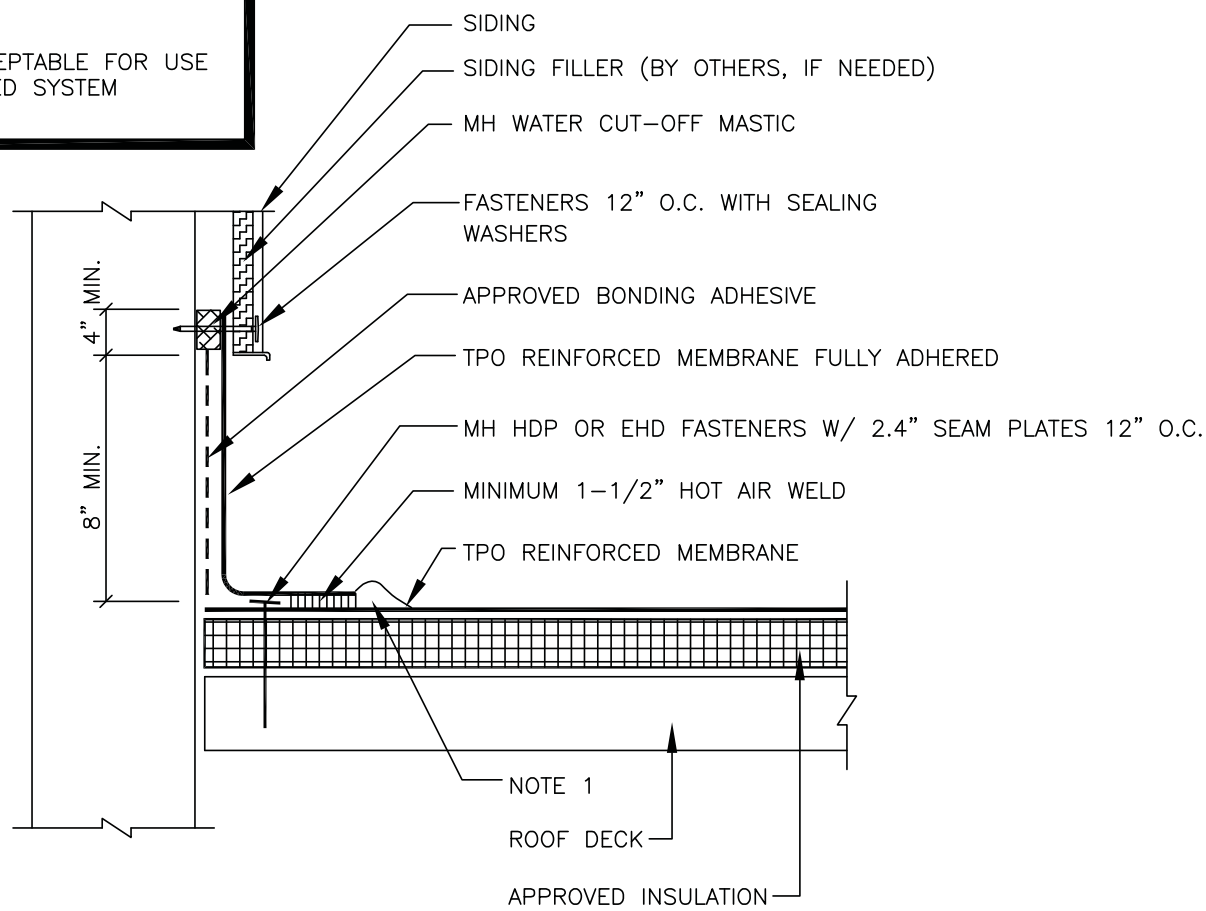

NOTES:

1. APPROXIMATELY $\frac{1}{8}$" DIAMETER BEAD OF CUT–EDGE SEALANT IS REQUIRED ON CUT EDGES OF TPO REINFORCED MEMBRANE.

MULE-HIDE PRODUCTS CO., INC.	**BASE FLASHING AT SIDING** **SYSTEMS:** **ALL TPO SYSTEMS**	**DETAIL NO.:** **MHT-UN-311** REVISION DATE: 10/2013

®

NOTES:

1. WHEN USING MULE–HIDE ALL–PURPOSE BAR TO TERMINATE WALL FLASHING, TPO BONDING ADHESIVE MAY BE ELIMINATED WHEN FLASHING HEIGHT IS 18" OR LESS.

2. FLASHING HEIGHT SHALL BE A MINIMUM OF 8" HIGH WHERE POSSIBLE. IF REMOVING COUNTERFLASHING DO NOT BLOCK OR COVER EXISTING WEEP HOLES. TERMINATION OF THE FLASHING MUST BE BELOW EXISTING WEEP HOLES.

3. ALL PURPOSE BAR FASTENED 6" ON CENTER IN 10' SECTIONS WITH ¼" GAP BETWEEN SECTIONS. ALL PURPOSE BAR IS TO BE INSTALLED WITH "BUMPS" FACING WALL. A FASTENER MUST BE LOCATED WITHIN 2" OF ENDS OF AP BAR. DO NOT BEND AP BAR AROUND INSIDE OR OUTSIDE CORNERS.

4. APPROXIMATELY 1/8" DIAMETER BEAD OF CUT–EDGE SEALANT IS REQUIRED ON CUT EDGES OF TPO REINFORCED MEMBRANE.

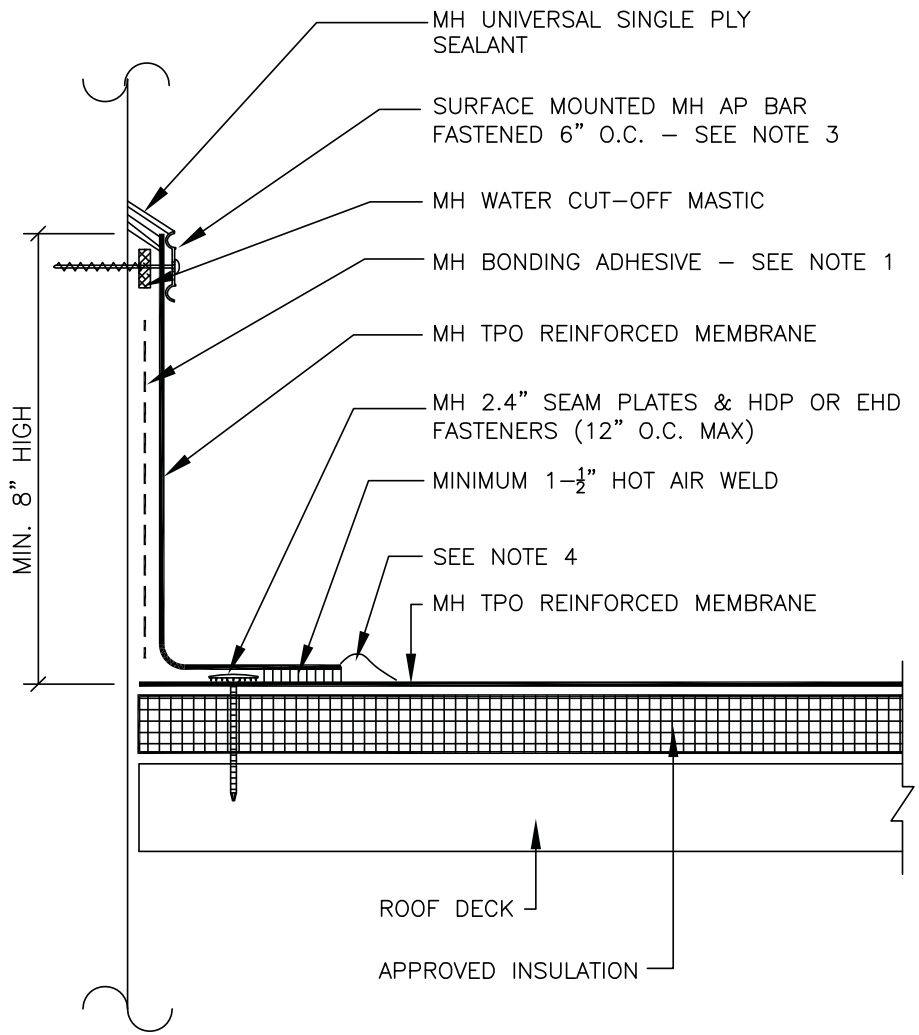

MULE-HIDE PRODUCTS CO., INC.	**WALL FLASHING WITH ALL-PURPOSE BAR** **SYSTEMS:** **ALL TPO SYSTEMS**	**DETAIL NO.:** **MHT-UN-312** REVISION DATE: 10/2013

®

NOTES:

1. POSITION SEAM PLATES 1/2" TO 1" FROM EDGE OF DECK MEMBRANE.

2. APPROXIMATELY 1/8" DIAMETER BEAD OF CUT–EDGE SEALANT IS REQUIRED ON CUT EDGES OF TPO REINFORCED MEMBRANE.

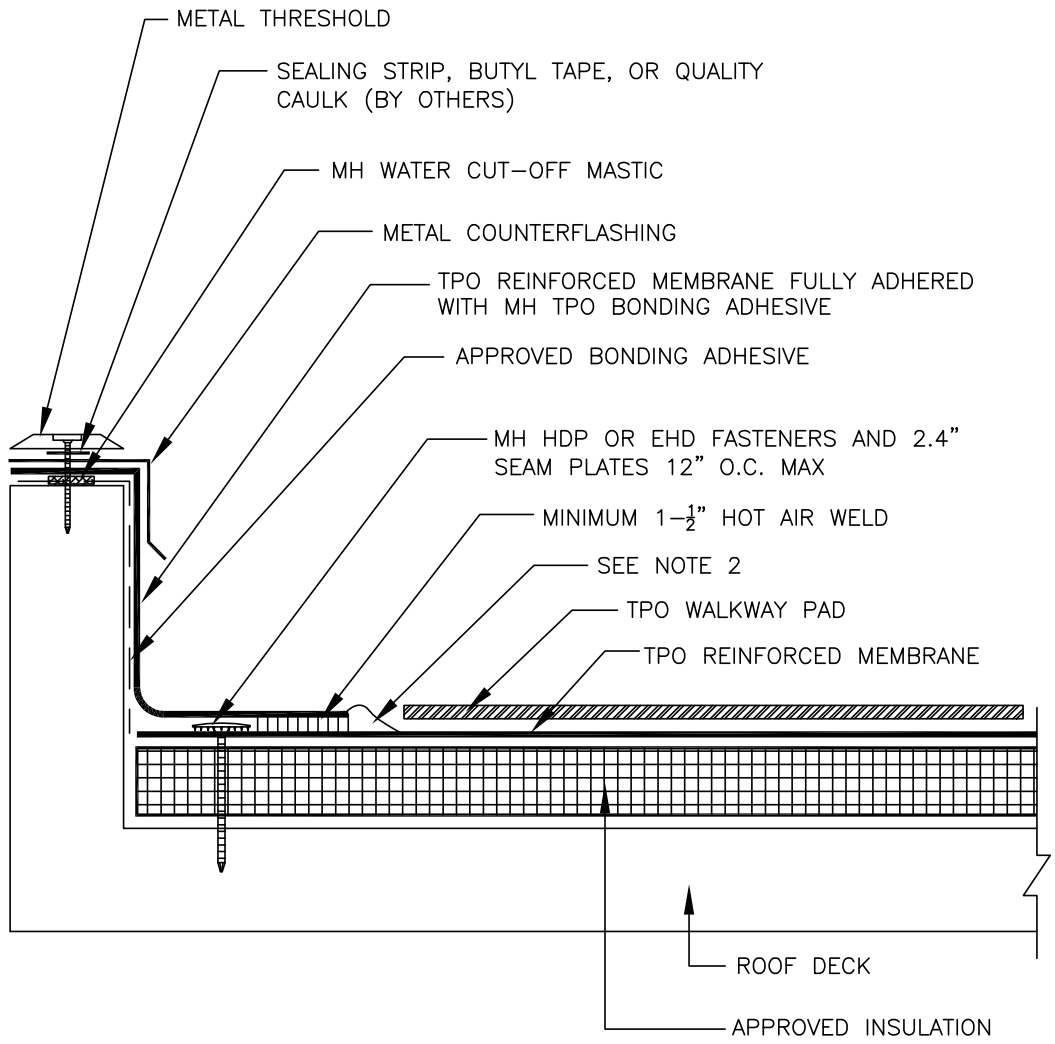

MULE-HIDE PRODUCTS CO., INC.	**DOOR THRESHOLD FLASHING**	**DETAIL NO.:**
	SYSTEMS:	**MHT-UN-321**
	ALL TPO SYSTEMS	REVISION DATE: 10/2013

®

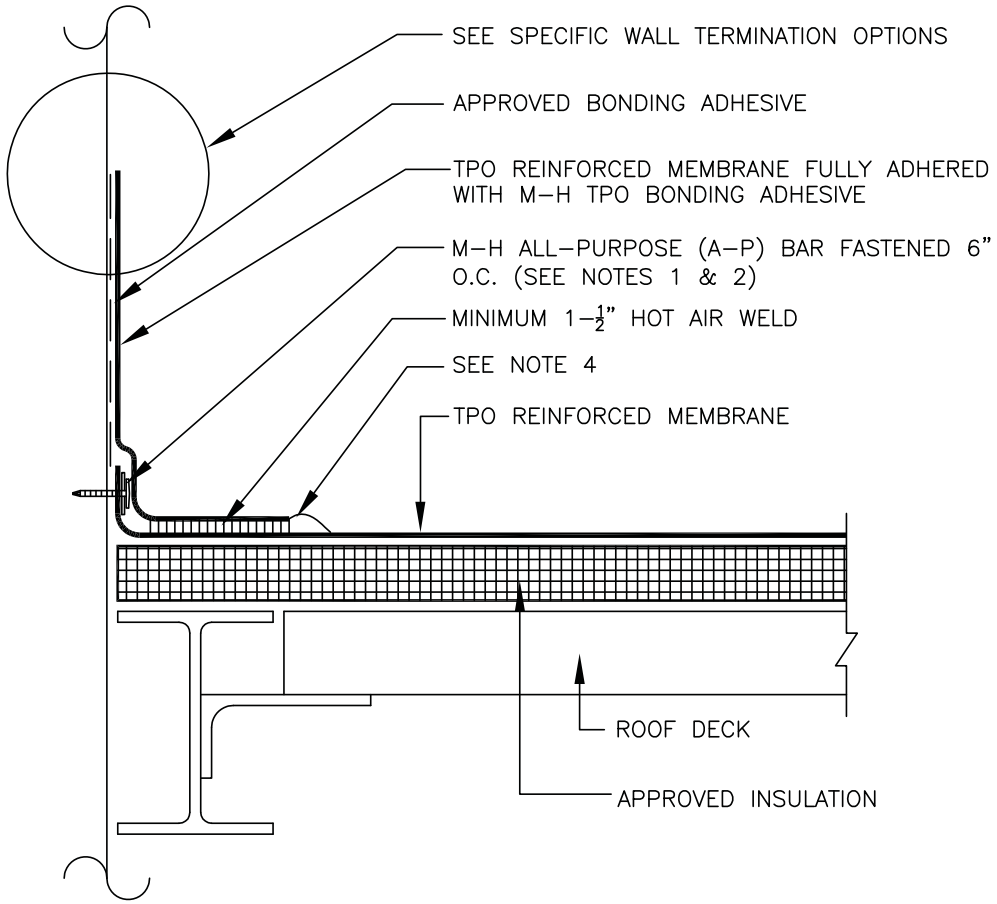

NOTES:

1. USE ONLY WHEN IT IS NOT POSSIBLE TO FASTEN HORIZONTALLY AT BASE OF PARAPET. M–H 2.4" SEAM PLATES MAY BE INSTALLED VERTICALLY AS AN OPTION TO USING THE ALL–PURPOSE BAR. PLATES MUST NOT EXCEED 12" O.C.
2. WHEN AP BAR IS USED IN LIEU OF 2.4" SEAM PLATES AND HDP OR EHD FASTENERS, THE "BUMPS" ARE INSTALLED UP.
3. WALL FASTENERS MUST ACHIEVE MINIMUM PULLOUT RESISTANCE OF 250 LBS.
4. APPROXIMATELY 1/8" DIAMETER BEAD OF CUT–EDGE SEALANT IS REQUIRED ON CUT EDGES OF TPO REINFORCED MEMBRANE.

MULE-HIDE PRODUCTS CO., INC.	**BASE ATTACHMENT ALL-PURPOSE BAR**	**DETAIL NO.:**
	SYSTEMS:	**MHT-UN-330**
	ALL TPO SYSTEMS	REVISION DATE: 10/2013

®

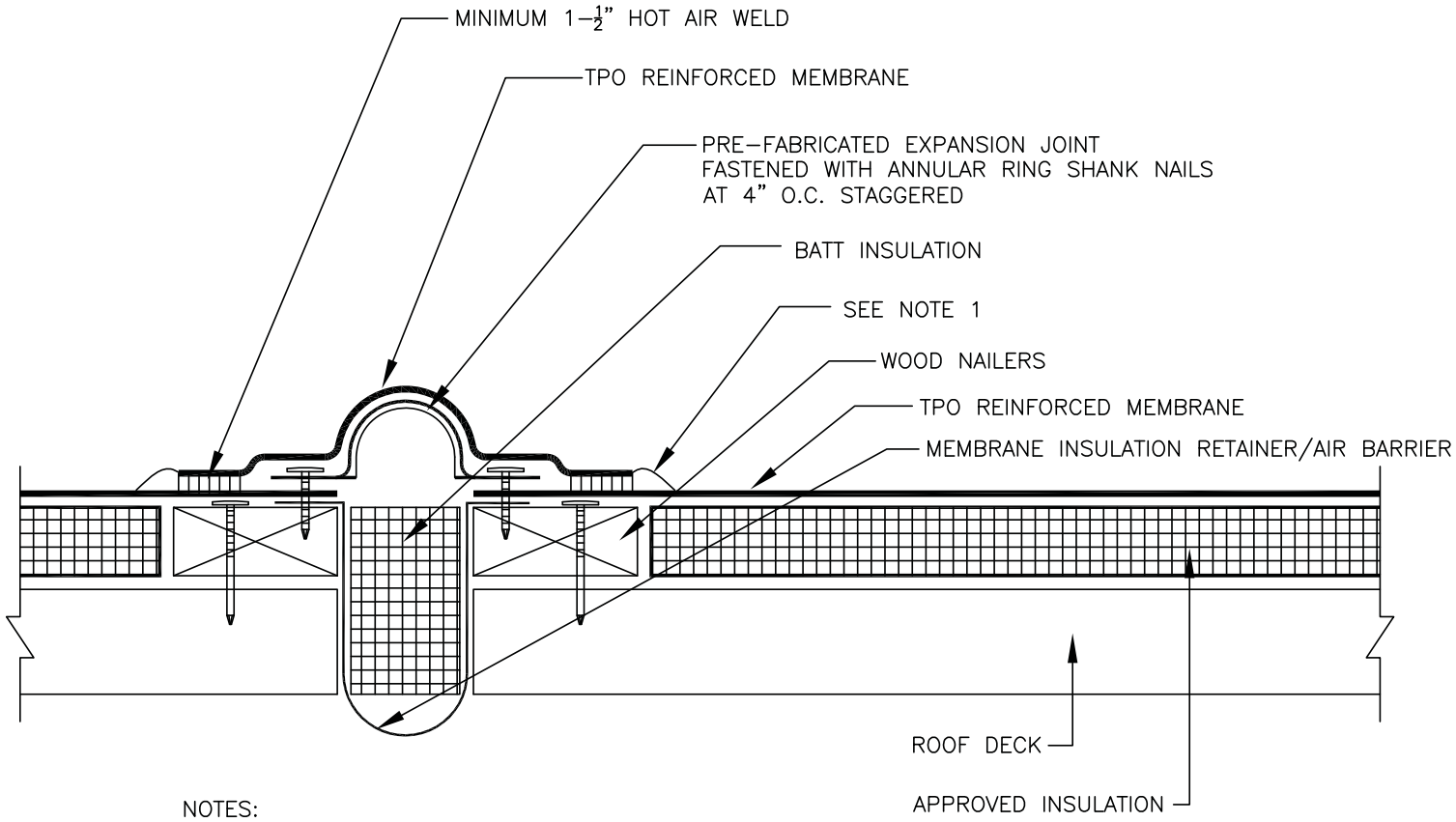

NOTES:

1. APPROXIMATELY 1/8" DIAMETER BEAD OF CUT–EDGE SEALANT IS REQUIRED ON CUT EDGES OF TPO REINFORCED MEMBRANE.

MULE-HIDE PRODUCTS CO., INC.	**EXPANSION JOINT DETAIL**	**DETAIL NO.:**
	SYSTEMS:	**MHT-UN-401**
	ALL TPO SYSTEMS	REVISION DATE: 10/2013

®

NOTES:

1. POSITION SEAM PLATES 1/2" TO 1" FROM EDGE OF DECK MEMBRANE.

2. APPROXIMATELY 1/8" DIAMETER BEAD OF CUT-EDGE SEALANT IS REQUIRED ON CUT EDGES OF TPO REINFORCED MEMBRANE.

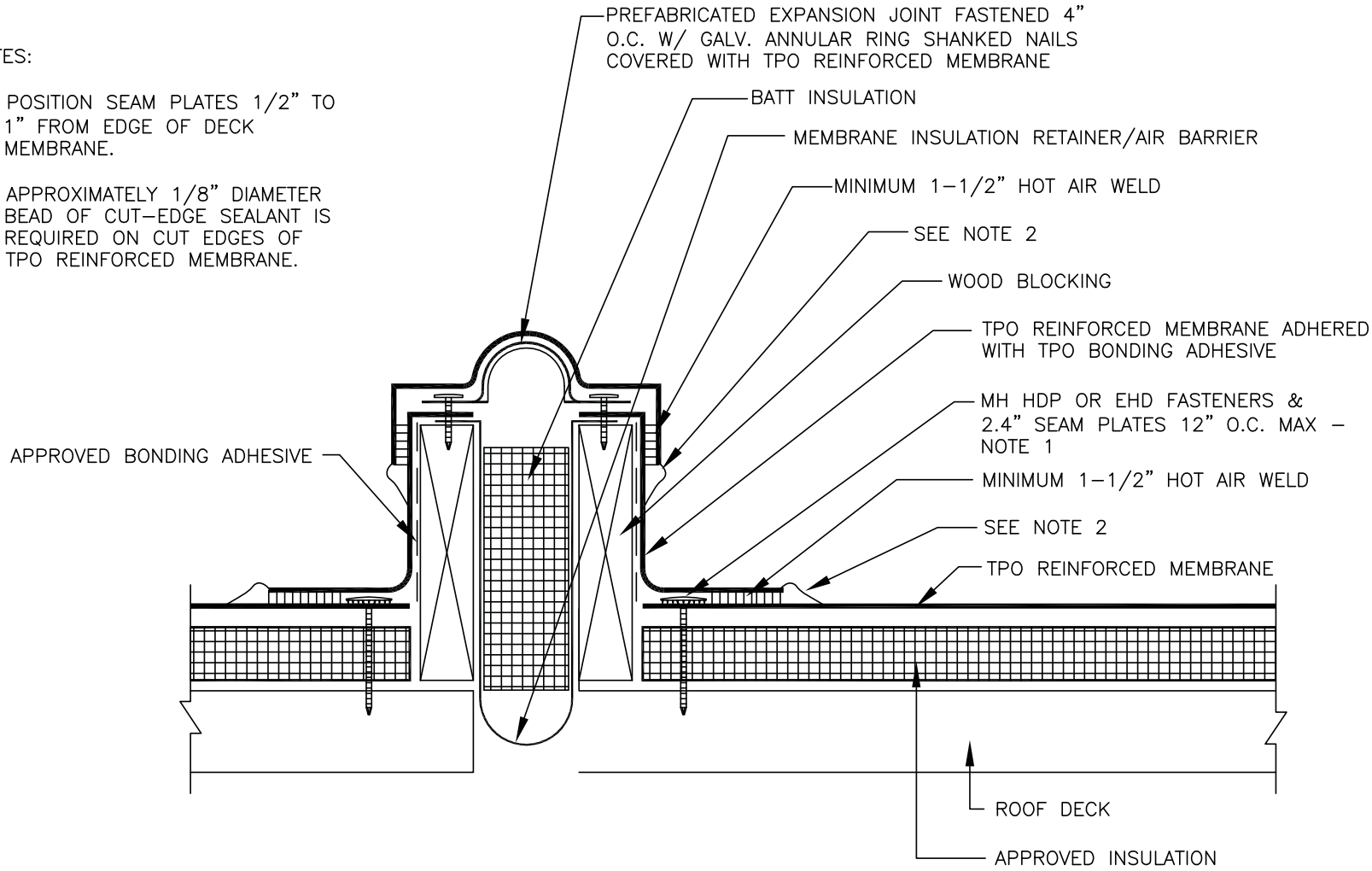

MULE-HIDE PRODUCTS CO., INC.	**EXPANSION JOINT CURB**	**DETAIL NO.:**
	SYSTEMS:	**MHT-UN-402**
	ALL TPO SYSTEMS	REVISION DATE: 10/2013

®

NOTES:

1. NAILERS SHALL BE SECURELY ANCHORED TO THE DECK AT A MAXIMUM SPACING OF 3 FEET TO RESIST A FORCE OF 175 LBS PER LINEAR FOOT IN ANY DIRECTION.

2. APPROXIMATELY 1/8" DIAMETER BEAD OF CUT–EDGE SEALANT IS REQUIRED ON CUT EDGES OF TPO REINFORCED MEMBRANE.

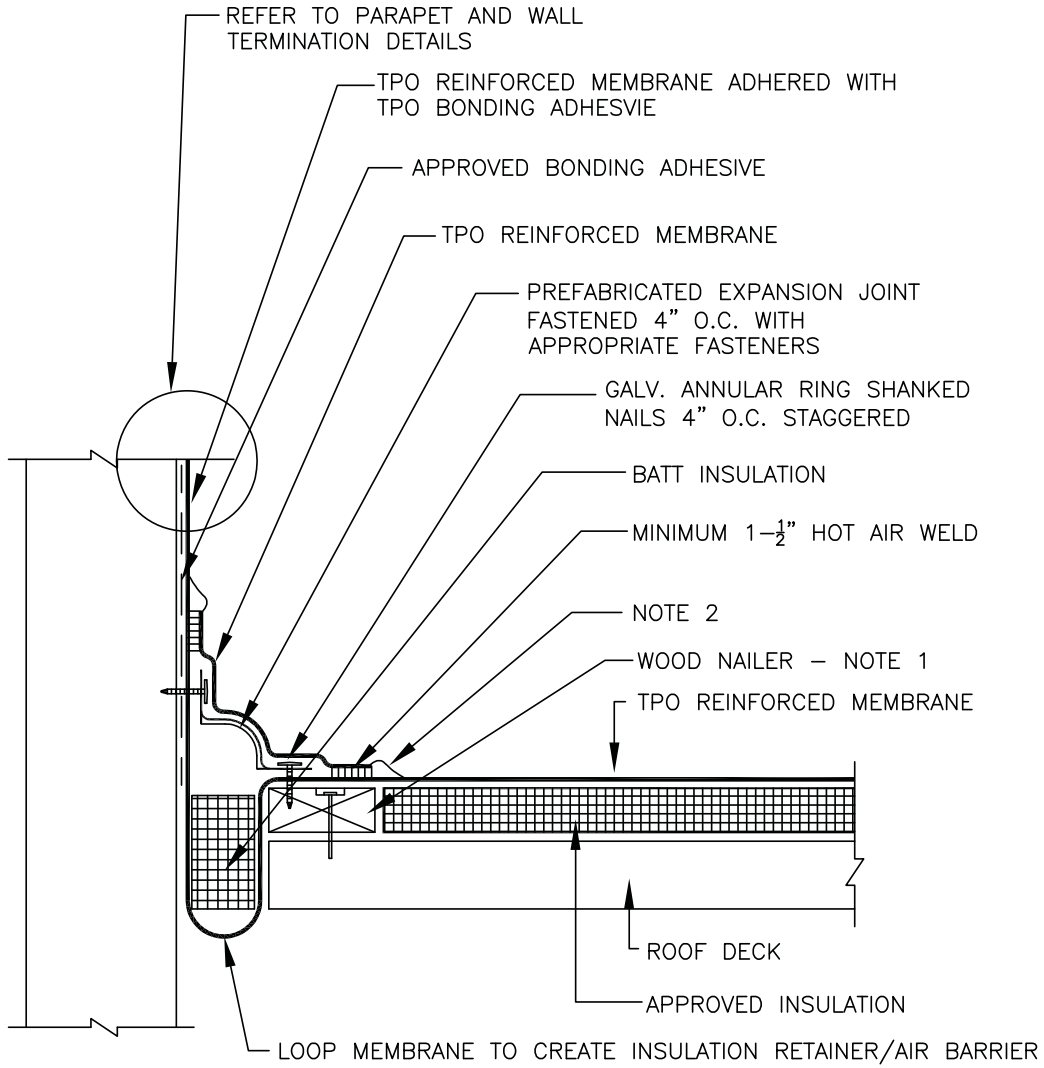

MULE-HIDE PRODUCTS CO., INC.	**WALL EXPANSION JOINT**	**DETAIL NO.:**
	SYSTEMS:	**MHT-UN-403**
	ALL TPO SYSTEMS	REVISION DATE: 10/2013

®

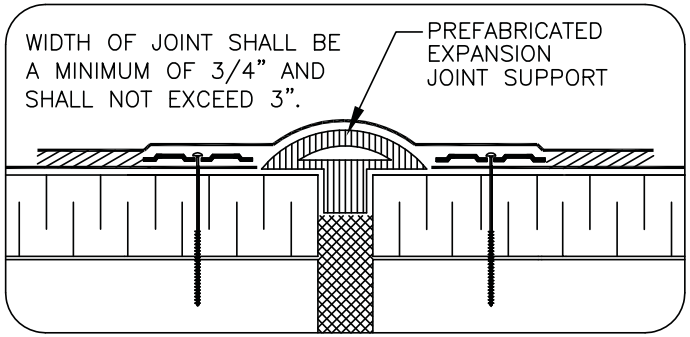

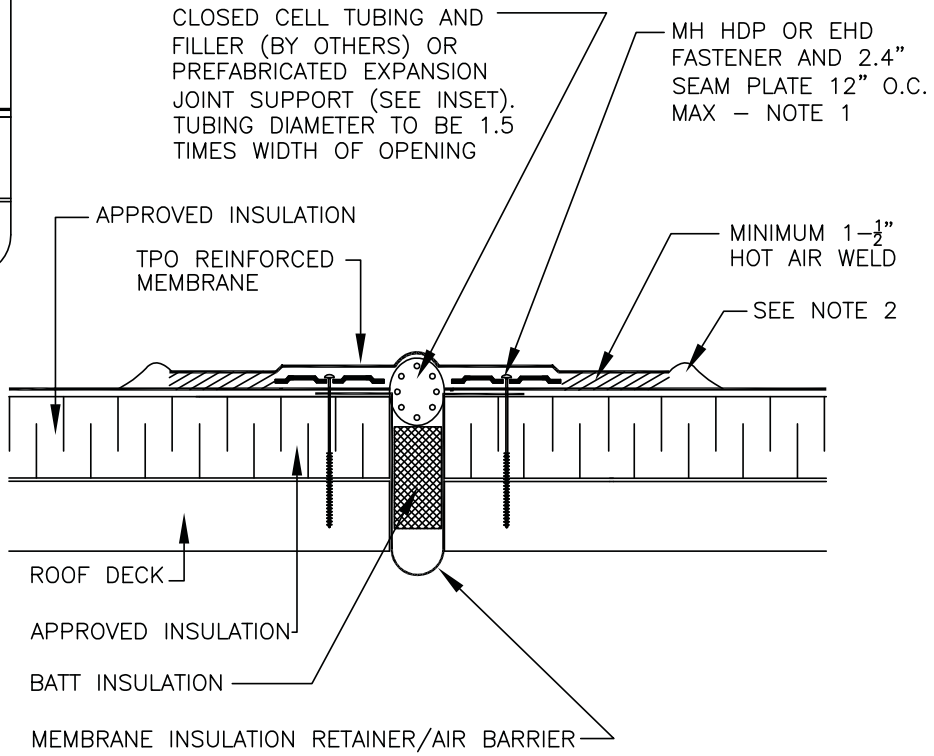

NOTES:

1. POSITION SEAM PLATES 1/2" MINIMUM TO 1" MAXIMUM FROM EDGE OF TPO DECK MEMBRANE.
2. APPROXIMATELY 1/8" DIAMETER BEAD OF CUT–EDGE SEALANT IS REQUIRED ON CUT EDGES OF TPO REINFORCED MEMBRANE.
3. MULE–HIDE RECOMMENDS THE USE OF CARLISLE PREFABRICATED EXPANSION JOINT SUPPORTS.

MULE-HIDE PRODUCTS CO., INC.	**EXPANSION JOINT DETAILS**	**DETAIL NO.:**
	SYSTEMS:	**MHT-UN-404A**
	ALL TPO SYSTEMS	REVISION DATE: 10/2013

®

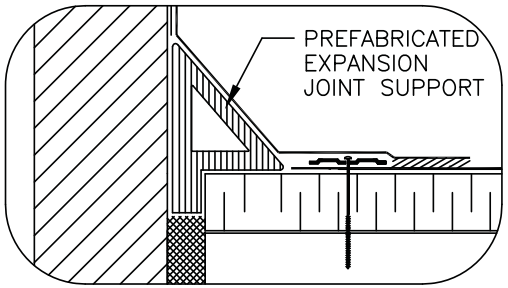

WIDTH OF JOINT SHALL BE A MINIMUM OF 3/4" AND SHALL NOT EXCEED 2".

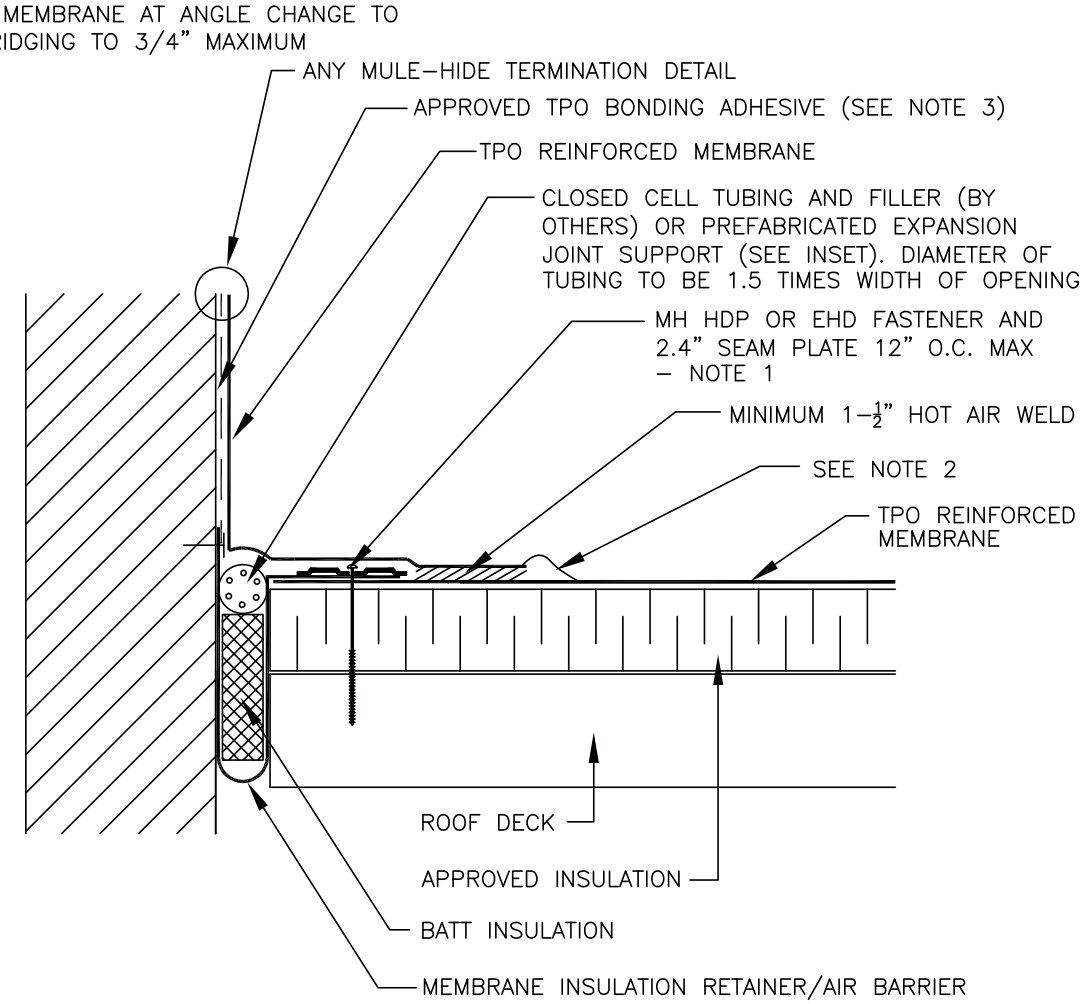

NOTES:

1. POSITION FASTENING PLATES 1/2" MINIMUM TO 1" MAXIMUM FROM EDGE OF DECK MEMBRANE.
2. APPROXIMATELY 1/8" DIAMETER BEAD OF EDGE SEALANT IS REQUIRED ON CUT EDGES OF TPO REINFORCED MEMBRANE.
3. TPO BONDING ADHESIVE IS REQUIRED REGARDLESS OF TERMINATION HEIGHT.
4. MULE–HIDE RECOMMENDS THE USE OF CARLISLE'S PREFABRICATED EXPANSION JOINT SUPPORT AS AN OPTION FOR THIS DETAIL.

MULE-HIDE PRODUCTS CO., INC.	**WALL EXPANSION JOINT**	**DETAIL NO.:**
	SYSTEMS:	**MHT-UN-404B**
	ALL TPO SYSTEMS	REVISION DATE: 10/2013

®

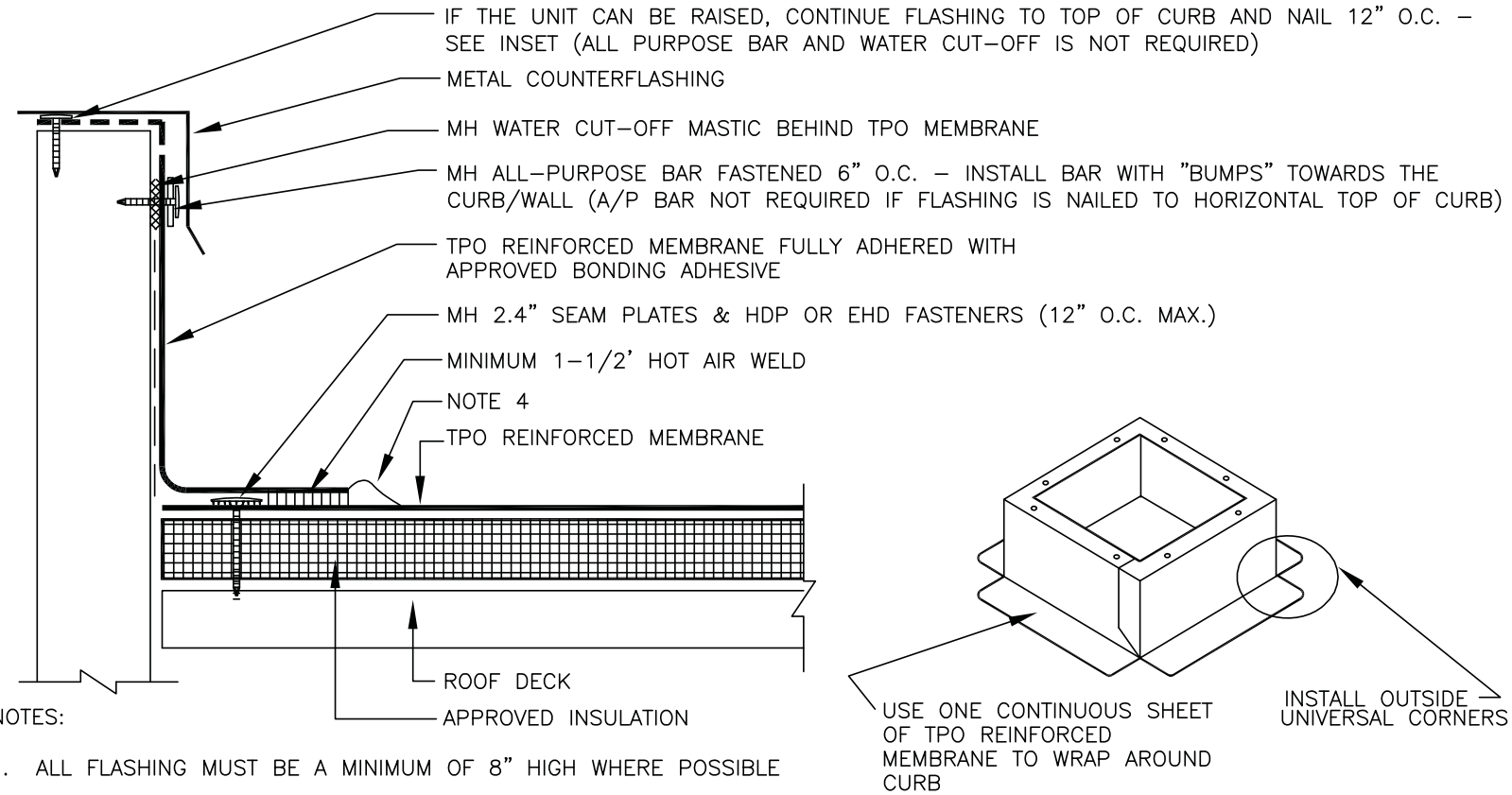

NOTES:

1. ALL FLASHING MUST BE A MINIMUM OF 8" HIGH WHERE POSSIBLE
2. DO NOT COVER WEEP HOLES OR THRU–WALL COUNTERFLASHINGS
3. WHEN THE M–H ALL–PURPOSE BAR IS USED UNDER THE COUNTERFLASHING OR THE MEMBRANE IS NAILED TO THE HORIZONTAL TOP OF THE CURB, TPO BONDING ADHESIVE MAY BE ELIMINATED WHEN FLASHING HEIGHT IS 18" OR LESS.
4. APPROXIMATELY 1/8" DIAMETER BEAD OF CUT–EDGE SEALANT IS REQUIRED ON CUT EDGES OF TPO REINFORCED MEMBRANE.

NOTE:

THIS DETAIL IS ACCEPTABLE FOR USE IN A 20–YEAR WARRANTED SYSTEM

MULE-HIDE PRODUCTS CO., INC.	**CURB / WALL FLASHING WITH M-H ALL-PURPOSE BAR** **SYSTEMS:** **ALL TPO SYSTEMS**	**DETAIL NO.:** **MHT-UN-502** REVISION DATE: 10/2013

®

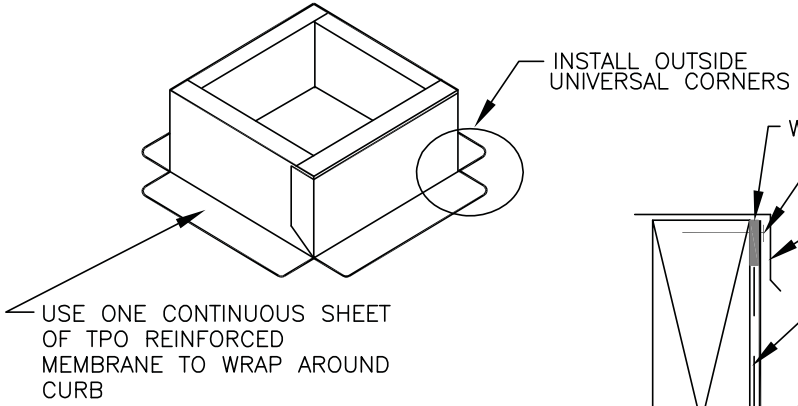

CREASE MEMBRANE AT ANGLE CHANGE TO LIMIT BRIDGING TO 3/4" MAXIMUM

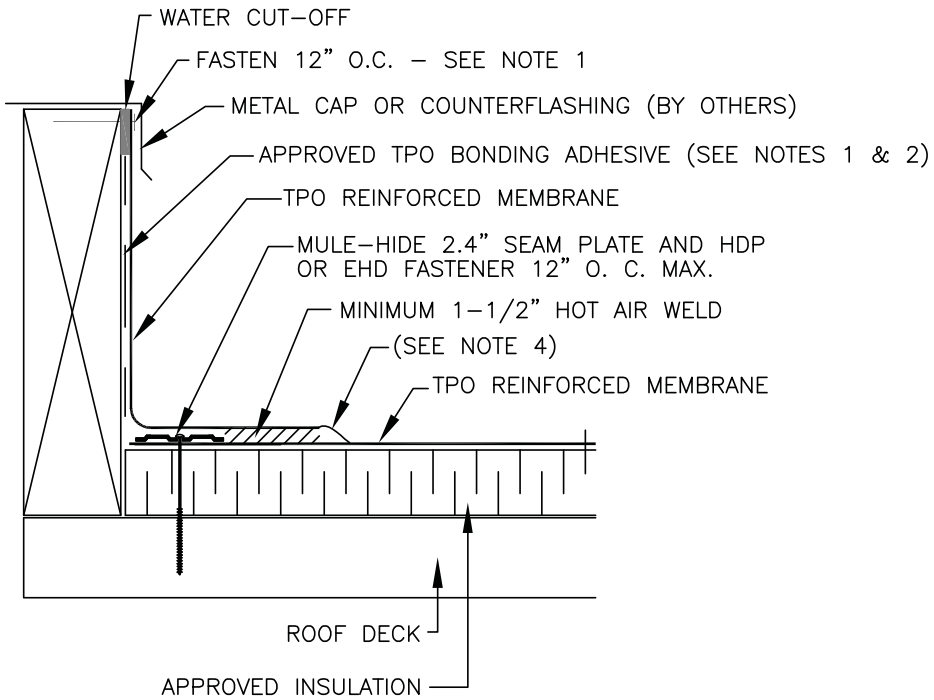

NOTES:

1. TPO REINFORCED MEMBRANE FASTENED APPROXIMATELY 12" ON CENTER. IF FASTENER PENETRATES METAL COUNTERFLASHING, USE NEOPRENE WASHER OR APPLY WATER CUT–OFF MASTIC UNDER COUNTERFLASHING OR CAULK FASTENER HEAD.

2. APPROXIMATELY 1/8" BEAD OF CUT–EDGE SEALANT IS REQUIRED ON CUT EDGES OF TPO REINFORCED MEMBRANE.

NOTE:

THIS DETAIL IS NOT ACCEPTABLE FOR USE IN A 20–YEAR WARRANTED SYSTEM.

MULE-HIDE PRODUCTS CO., INC.	**CURB FLASHING**	**DETAIL NO.:**
	SYSTEMS:	**MHT-UN-503**
	ALL TPO SYSTEMS	REVISION DATE: 10/2013

®

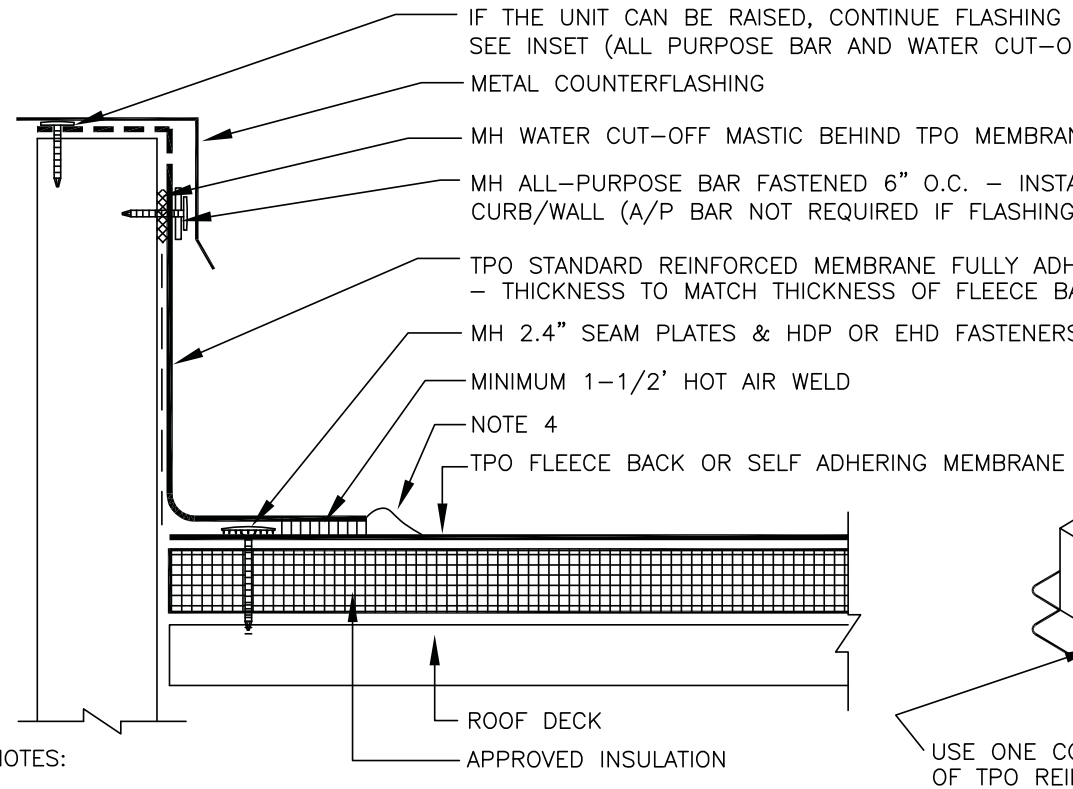

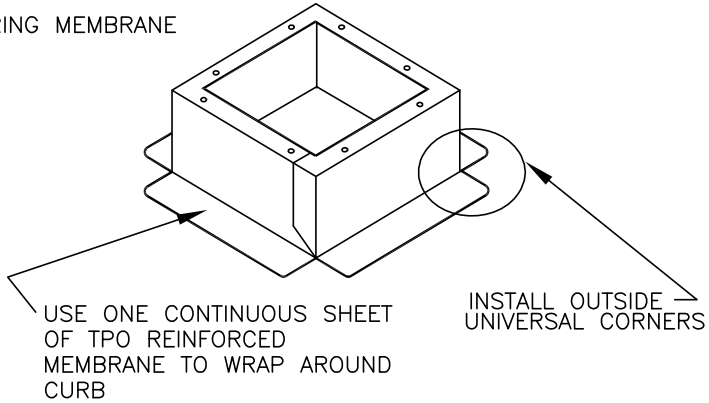

NOTES:

1. ALL FLASHING MUST BE A MINIMUM OF 8" HIGH WHERE POSSIBLE
2. DO NOT COVER WEEP HOLES OR THRU–WALL COUNTERFLASHINGS
3. WHEN THE M–H ALL–PURPOSE BAR IS USED UNDER THE COUNTERFLASHING OR THE MEMBRANE IS NAILED TO THE HORIZONTAL TOP OF THE CURB, TPO BONDING ADHESIVE MAY BE ELIMINATED WHEN FLASHING HEIGHT IS 18" OR LESS.
4. APPROXIMATELY 1/8" DIAMETER BEAD OF CUT–EDGE SEALANT IS REQUIRED ON CUT EDGES OF TPO REINFORCED MEMBRANE.

NOTE:

THIS DETAIL IS ACCEPTABLE FOR USE IN A 20–YEAR WARRANTED SYSTEM

MULE-HIDE PRODUCTS CO., INC.	**CURB / WALL FLASHING WITH M-H ALL-PURPOSE BAR** **SYSTEMS:** **ALL TPO FLEECE BACK & SELF ADHERING**	**DETAIL NO.:** **MHT-UN-503A** REVISION DATE: 10/2013

®

FOR DRAINS WITH TAPERED INSULATION AT DRAIN SUMP LESS THAN 3 INCHES TO 12

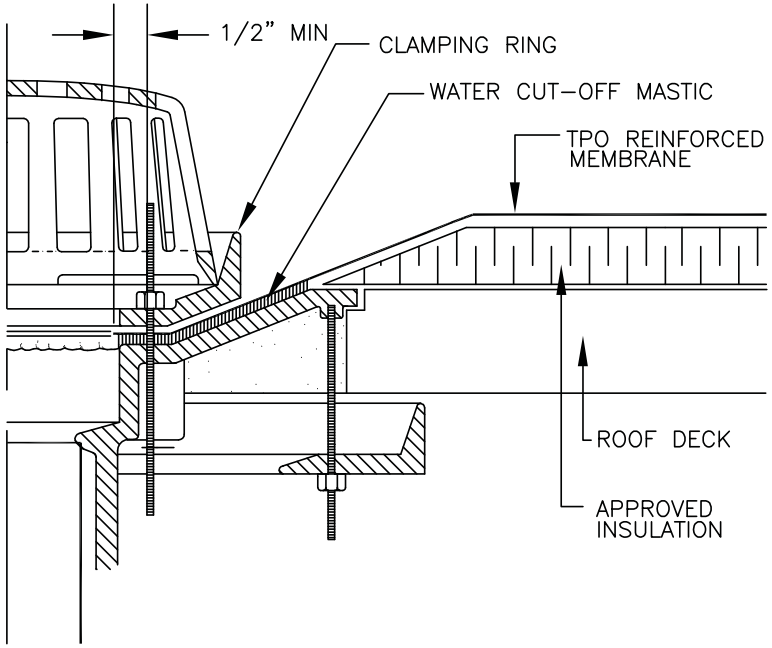

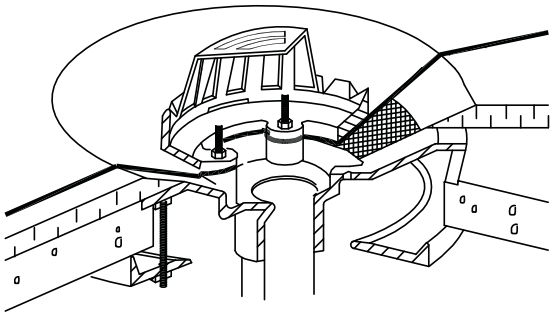

NOTES:

1. REMOVE ALL LEAD AND OTHER FLASHING.
2. ALL BOLTS AND CLAMPS MUST BE IN PLACE TO PROVIDE CONSTANT COMPRESSION ON WATER CUT-OFF MASTIC.
3. CUT THE MEMBRANE SO IT EXTENDS A MINIMUM OF 1/2" FROM THE ATTACHMENT POINTS OF THE DRAIN CLAMPING RING.
4. FOR DRAIN SUMPS WITH SLOPES GREATER THAN 3" IN 12" REFER TO DETAIL MHT-UN-511A.
5. DO NOT LOCATE FIELD SEAM WITHIN THE DRAIN OR DRAIN SUMP. IF FIELD SEAM OCCURs IN DRAIN OR DRAIN SUMP, A TARGET PATCH MUST BE INSTALLED. SEE APPROPRIATE TARGET PATCH DETAIL.

MULE-HIDE PRODUCTS CO., INC.	**DRAIN FLASHING - TAPERED INSULATION DRAIN SUMP SLOPE LESS THAN 3" TO 1"** **SYSTEMS:** **ALL TPO SYSTEMS**	**DETAIL NO.:** **MHT-UN-510A** REVISION DATE: 10/2013

®

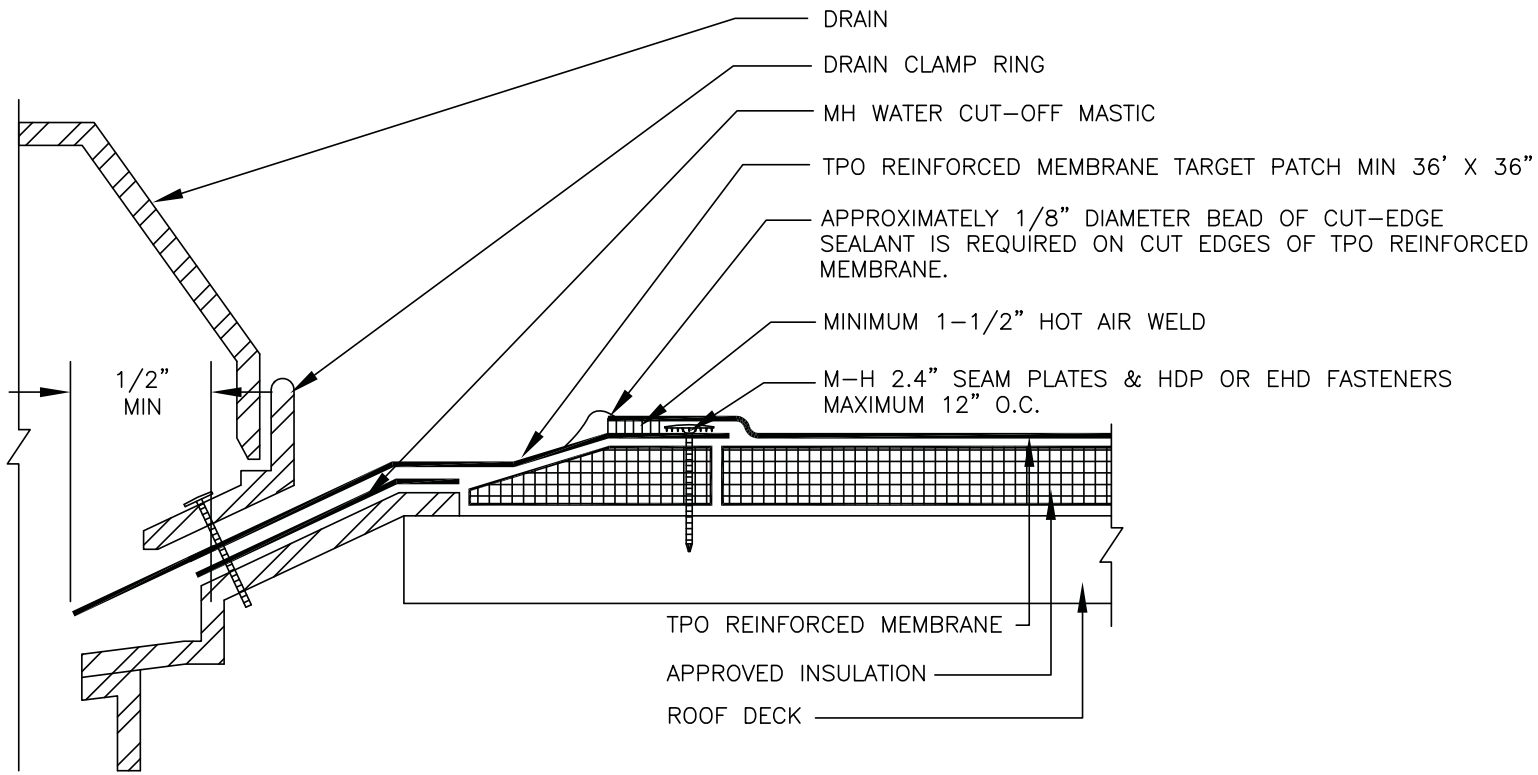

NOTES:

1. REMOVE ALL LEAD AND OTHER FLASHING.
2. ALL BOLTS AND CLAMPS MUST BE IN PLACE TO PROVIDE CONSTANT COMPRESSION ON WATER CUT–OFF MASTIC.
3. CUT THE MEMBRANE SO IT EXTENDS A MINIMUM OF 1/2" FROM THE ATTACHMENT POINTS OF THE DRAIN CLAMPING RING.
4. FOR DRAIN SUMPS WITH SLOPES GREATER THAN 3" IN 12" REFER TO DETAIL MHT–UN–511A.
5. THIS TWO PIECE DESIGN MUST BE USED WHEN A FIELD SEAM PASSES THROUGH THE DRAIN AREA.

MULE-HIDE PRODUCTS CO., INC.	**DRAIN FLASHING WITH TARGET PATCH**	**DETAIL NO.:**
	SYSTEMS:	**MHT-MA-510B**
	MECHANICALLY ATTACHED	REVISION DATE: 10/2013

®

NOTES:

1. CUT THE MEMBRANE SO IT EXTENDS A MINIMUM OF 1/2" FROM THE ATTACHMENT POINTS OF THE DRAIN CLAMPING RING.

2. THE CLAMPING RING BOLT MUST PENETRATE THE MEMBRANE.

3. ALL FLASHINGS ON A TPO FLEECEBACK PROJECT MUST BE CONSTRUCTED WITH STANDARD REINFORCED TPO MEMBRANE.

4. APPROXIMATELY 1/8" BEAD OF CUT-EDGE SEALANT IS REQUIRED ON CUT EDGES OF TPO REINFORCED MEMBRANE.

5. THICKNESS OF STANDARD TPO MEMBRANE TO MATCH THICKNESS OF FLEECEBACK TPO MEMBRANE.

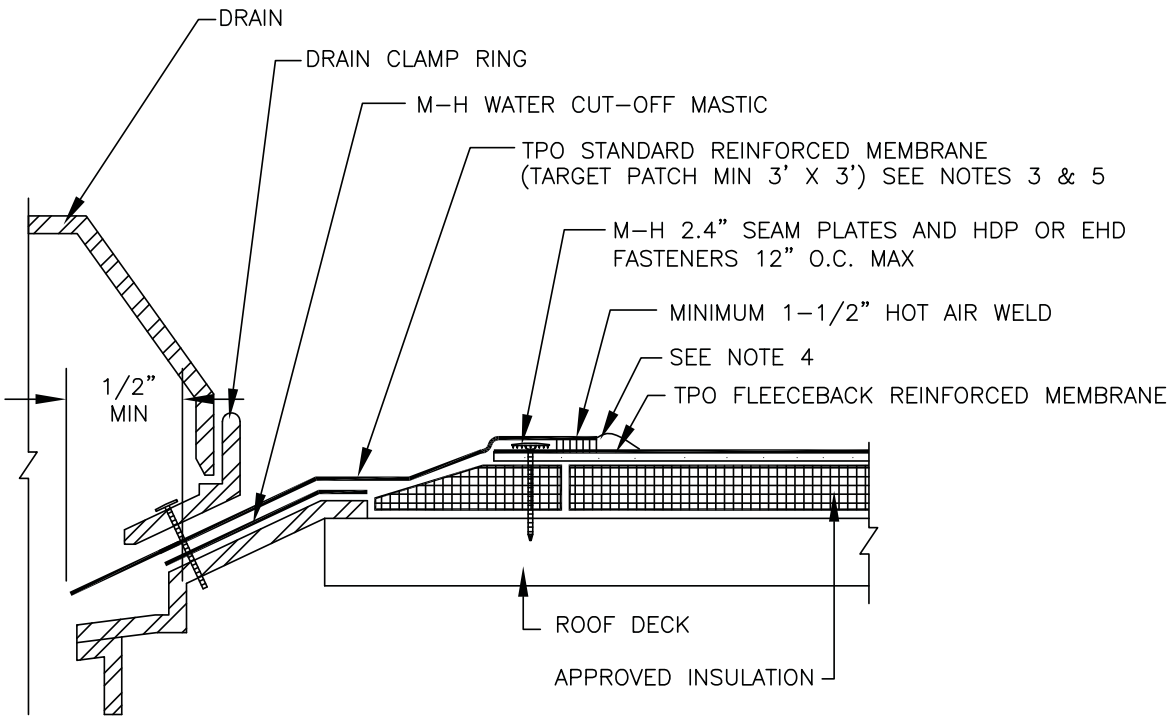

MULE-HIDE PRODUCTS CO., INC.	**DRAIN FLASHING WITH TARGET** **SYSTEMS: MECHANICALLY ATTACHED TPO FLEECE BACK**	**DETAIL NO.:** **MHT-MA-510C** REVISION DATE: 10/2013

®

NOTES:

1. CUT THE MEMBRANE SO IT EXTENDS A MINIMUM OF 1/2" FROM THE ATTACHMENT POINTS OF THE DRAIN CLAMPING RING.

2. THE CLAMPING RING BOLT MUST PENETRATE THE MEMBRANE.

3. ALL FLASHINGS ON A TPO FLEECEBACK OR SELF ADHERING PROJECT MUST BE CONSTRUCTED WITH STANDARD REINFORCED TPO MEMBRANE.

4. APPROXIMATELY 1/8" BEAD OF CUT-EDGE SEALANT IS REQUIRED ON CUT EDGES OF TPO REINFORCED MEMBRANE.

5. THICKNESS OF STANDARD TPO MEMBRANE TO MATCH THICKNESS OF FLEECEBACK TPO OR SELF ADHERING MEMBRANE.

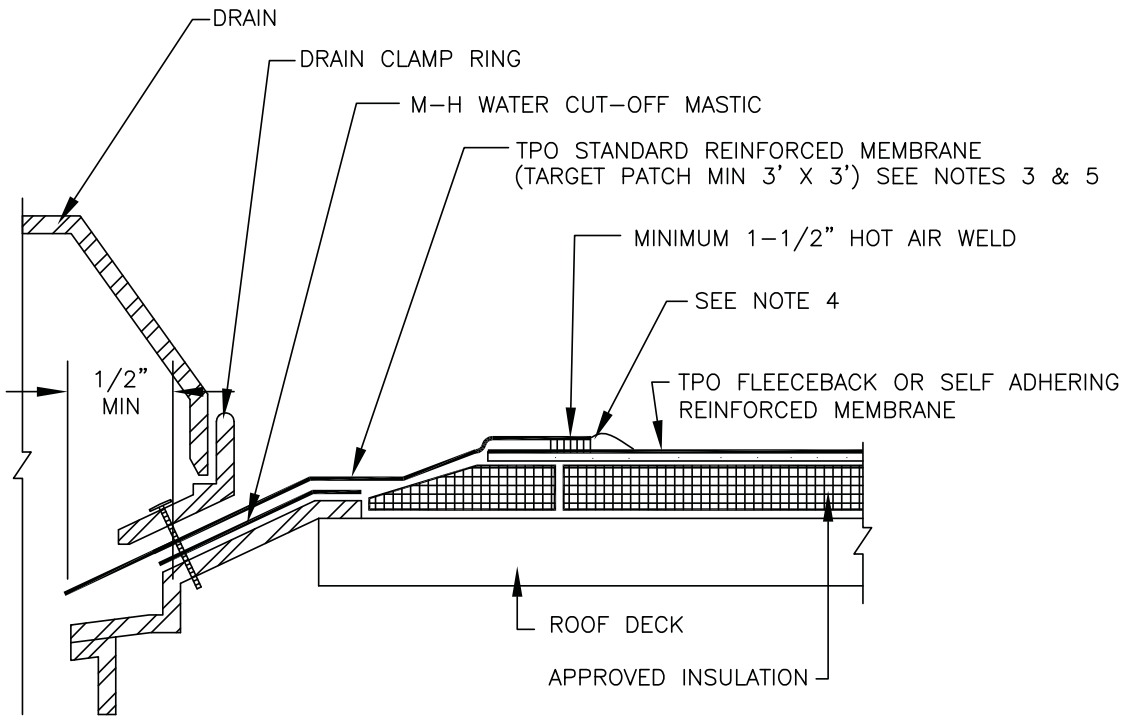

MULE-HIDE PRODUCTS CO., INC.	**DRAIN FLASHING WITH TARGET**	**DETAIL NO.:**
	SYSTEMS: FULLY ADHERED TPO FLEECE BACK & SELF ADHERING	**MHT-FA-510D**
		REVISION DATE: 10/2013

®

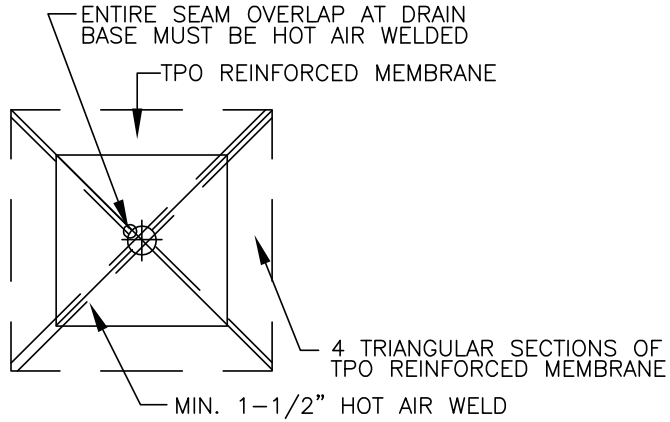

FOR DRAINS WITH TAPERED INSULATION AT DRAIN SUMP GREATER THAN 3" TO 12"

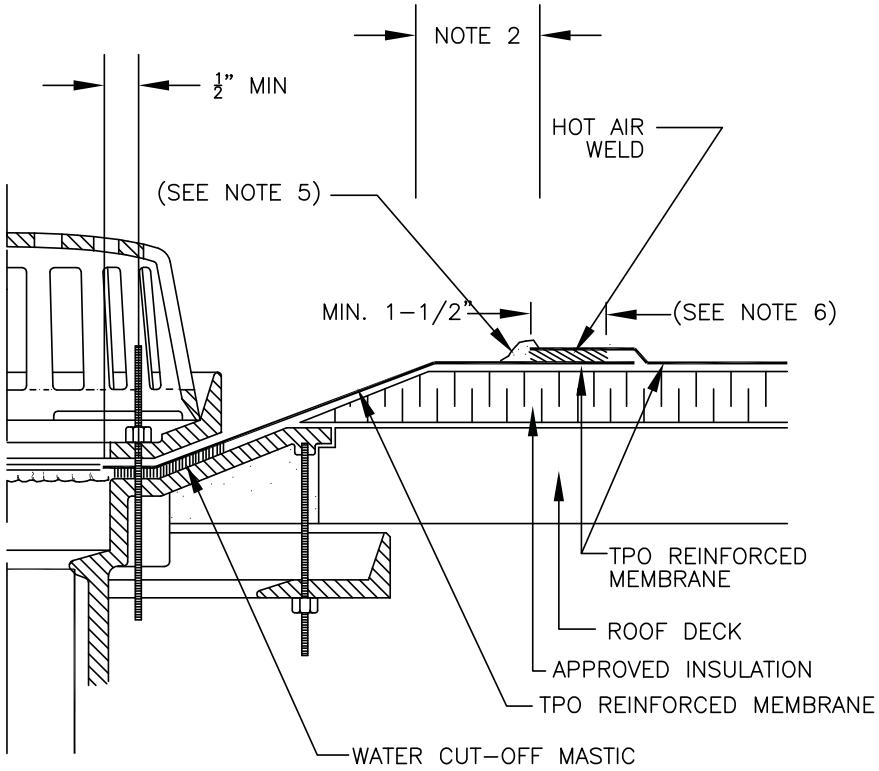

NOTES:

1. REMOVE ALL LEAD AND OTHER FLASHING.
2. EXTEND THE TPO REINFORCED MEMBRANE APPROXIMATELY 5–1/2" OUT OF THE SUMP AREA.
3. ALL BOLTS OR CLAMPS MUST BE IN PLACE TO PROVIDE COMPRESSION ON WATER CUT–OFF MASTIC.
4. CUT THE MEMBRANE SO IT EXTENDS A MINIMUM OF 1/2" FROM THE ATTACHMENT POINTS OF THE DRAIN CLAMPING RING.
5. APPROXIMATELY 1/8" DIAMETER BEAD OF CUT–EDGE SEALANT IS REQUIRED ON CUT EDGE OF TPO REINFORCED MEMBRANE.
6. MECHANICALLY ATTACHED SYSTEMS WILL REQUIRE HDP OR EHD FASTENERS AND 2.4" SEAM PLATES (12" O.C. MAX.) INSTALLED IN TARGET PANELS WITH FIELD SHEET OVERLAPPED AND HOT AIR WELDED (REFER TO DETAIL MHT–MA–510B).

MULE-HIDE PRODUCTS CO., INC.	**DRAIN FLASHING WITH TARGET PANELS DRAIN SUMP SLOPE GREATER THAN 3" TO 12"**	**DETAIL NO.:**
	SYSTEMS:	**MHT-UN-511A**
	ALL TPO SYSTEMS	REVISION DATE: 10/2013

®

FOR DRAINS WITH TAPERED INSULATION AT DRAIN SUMP GREATER THAN 3" TO 1 HORIZONTAL FOOT

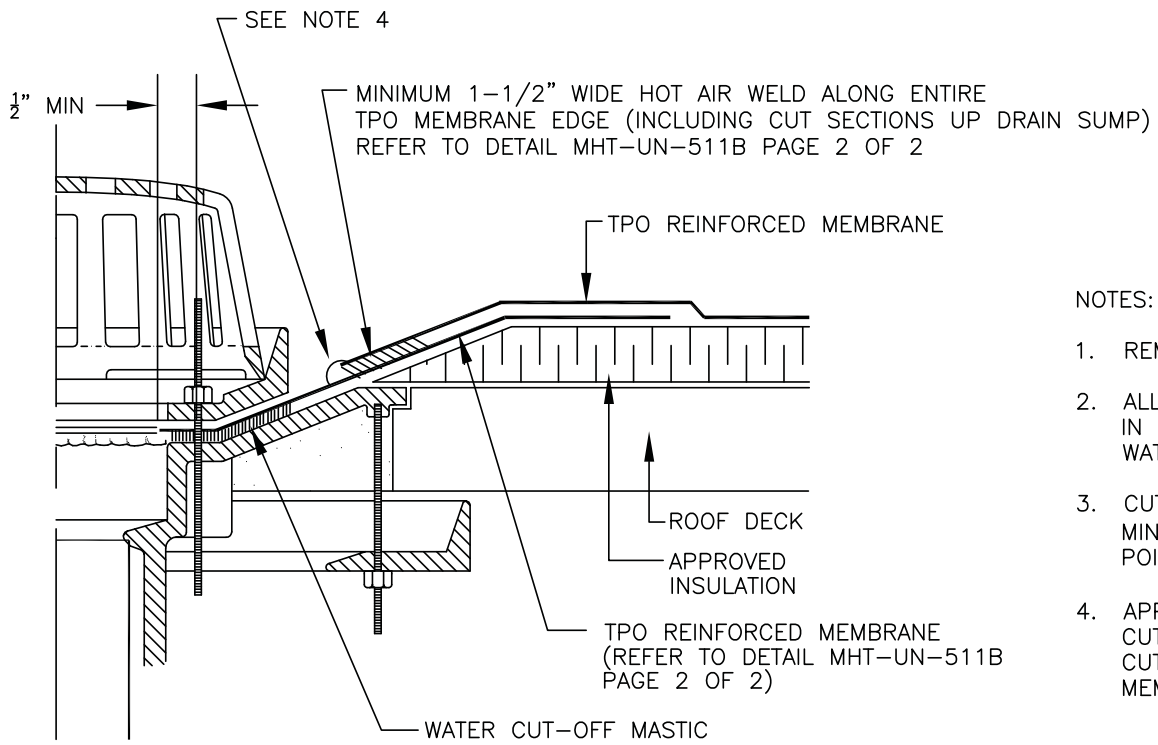

NOTES:

1. REMOVE ALL LEAD AND OTHER FLASHING.
2. ALL DRAIN BOLTS OR CLAMPS MUST BE IN PLACE TO PROVIDE COMPRESSION ON WATER CUT-OFF MASTIC.
3. CUT MEMBRANE SO IT EXTENDS A MINIMUM OF 1/2" FROM ATTACHMENT POINTS OF THE CLAMPING RING.
4. APPROXIMATELY 1/8" DIAMETER BEAD OF CUT-EDGE SEALANT IS REQUIRED ON CUT EDGES OF TPO REINFORCED MEMBRANE.

MULE-HIDE PRODUCTS CO., INC.	**DRAIN FLASHING WITH TARGET** **PAGE 1 OF 2** **SYSTEMS:** **ALL TPO SYSTEMS**	**DETAIL NO.:** **MHT-UN-511B1** REVISION DATE: 10/2013

®

FOR DRAINS WITH TAPERED INSULATION AT DRAIN SUMP GREATER THAN 3" TO 1 HORIZONTAL FOOT

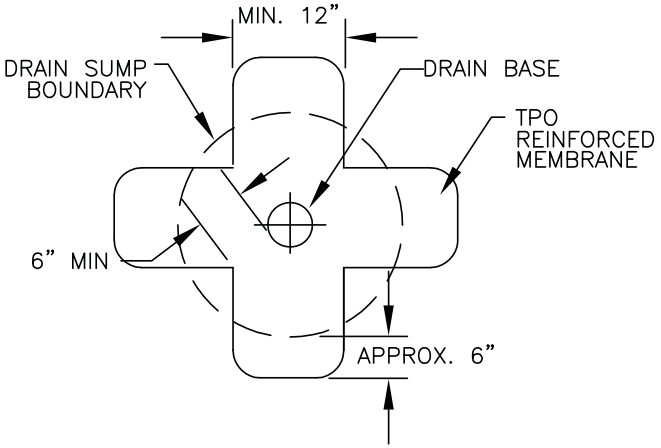

CUT SECTION OF TPO REINFORCED MEMBRANE AS SHOWN AND POSITION INTO DRAIN SUMP. EXTEND MEMBRANE OUT OF DRAIN SUMP APPROXIMATELY 6" (ROUND CORNERS).

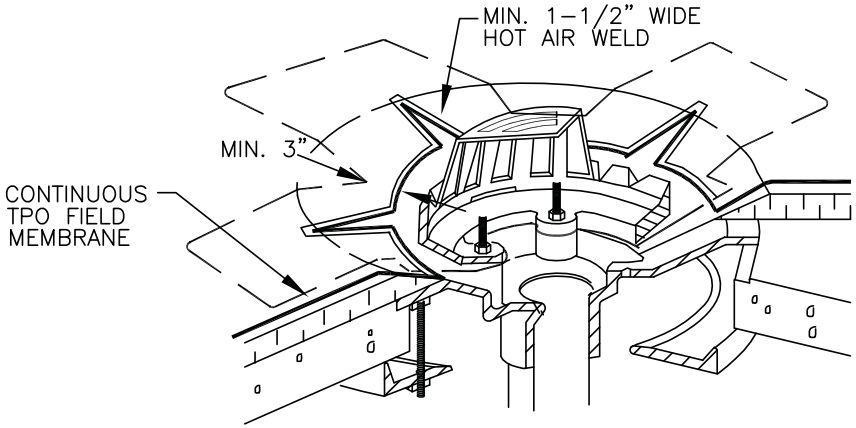

EXTEND TPO REINFORCED MEMBRANE ONTO MEMBRANE SECTION POSITIONED AT DRAIN SUMP AND CUT AS SHOWN TO LAY FLAT IN SUMP. HOT AIR WELD A MINIMUM OF 1-1/2" COMPLETELY SURROUNDING AREA.

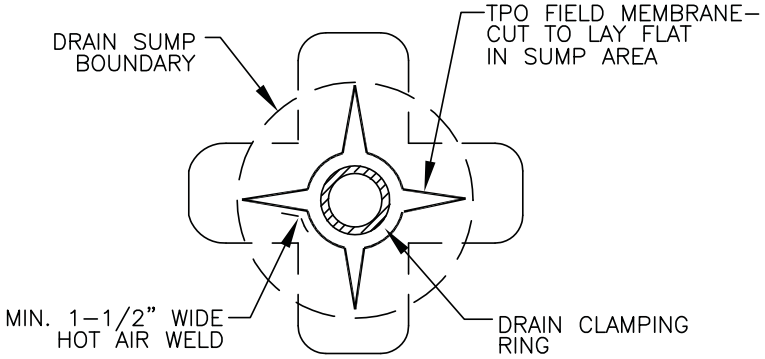

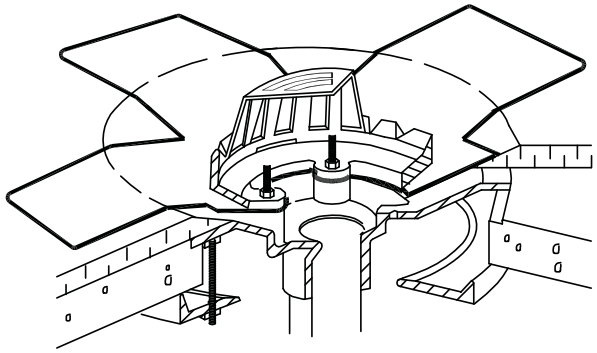

MULE-HIDE PRODUCTS CO., INC.	**DRAIN FLASHING WITH TARGET** **PAGE 2 OF 2** **SYSTEMS:** **ALL TPO SYSTEMS**	**DETAIL NO.:** **MHT-UN-511B2** REVISION DATE: 10/2013

®

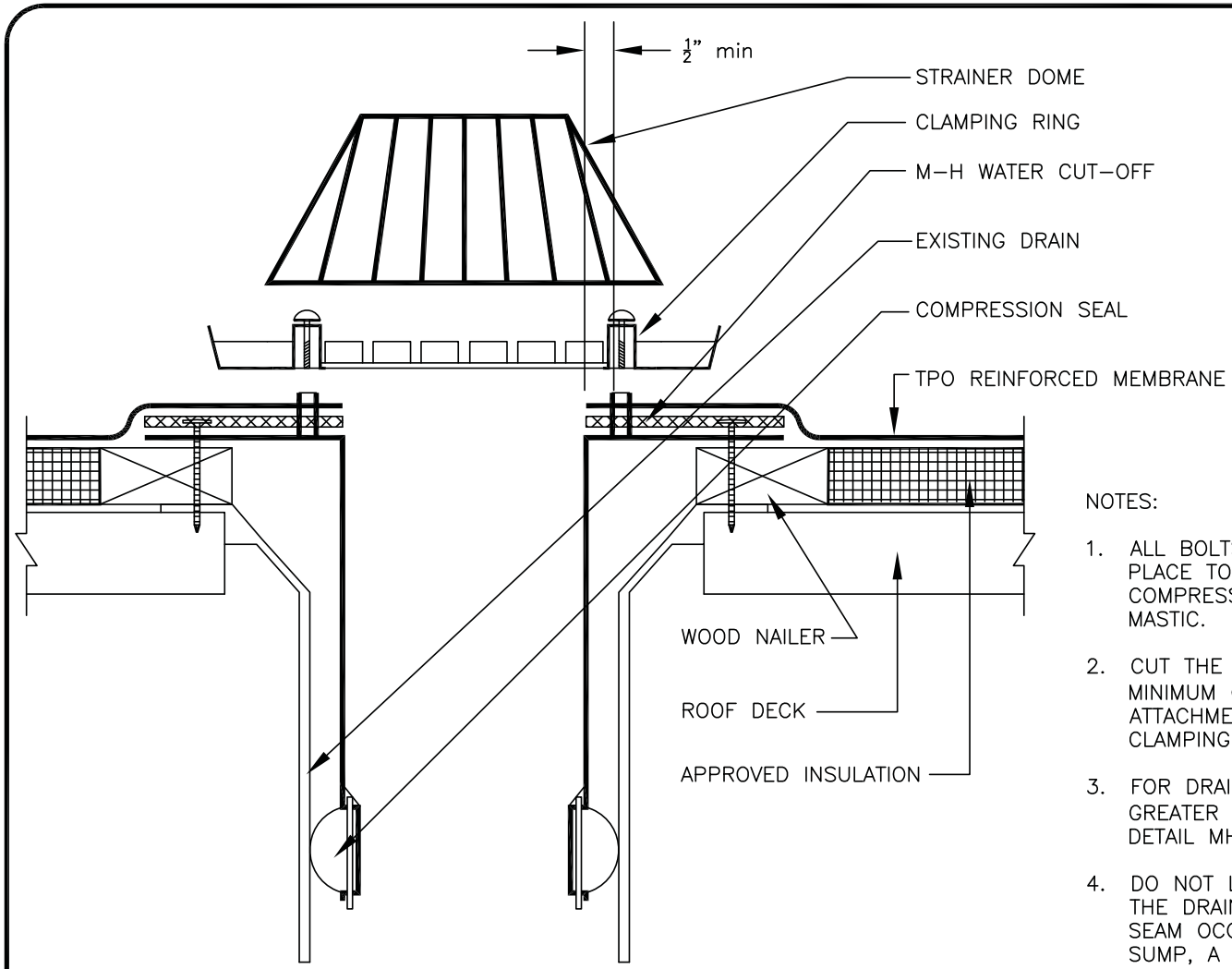

NOTES:

1. ALL BOLTS AND CLAMPS MUST BE IN PLACE TO PROVIDE CONSTANT COMPRESSION ON WATER CUT–OFF MASTIC.
2. CUT THE MEMBRANE SO IT EXTENDS A MINIMUM OF 1/2" FROM THE ATTACHMENT POINTS OF THE DRAIN CLAMPING RING.
3. FOR DRAIN SUMPS WITH SLOPES GREATER THAN 3" IN 12" REFER TO DETAIL MHT–UN–511A.
4. DO NOT LOCATE FIELD SEAM WITHIN THE DRAIN OR DRAIN SUMP. IF FIELD SEAM OCCURs IN DRAIN OR DRAIN SUMP, A TARGET PATCH MUST BE INSTALLED. SEE APPROPRIATE TARGET PATCH DETAIL.

MULE-HIDE PRODUCTS CO., INC.	**RETROFIT ROOF DRAIN COMPRESSION TYPE INSERT**	**DETAIL NO.:**
	SYSTEMS:	**MHT-UN-512**
	ALL TPO SYSTEMS	REVISION DATE: 10/2013

®

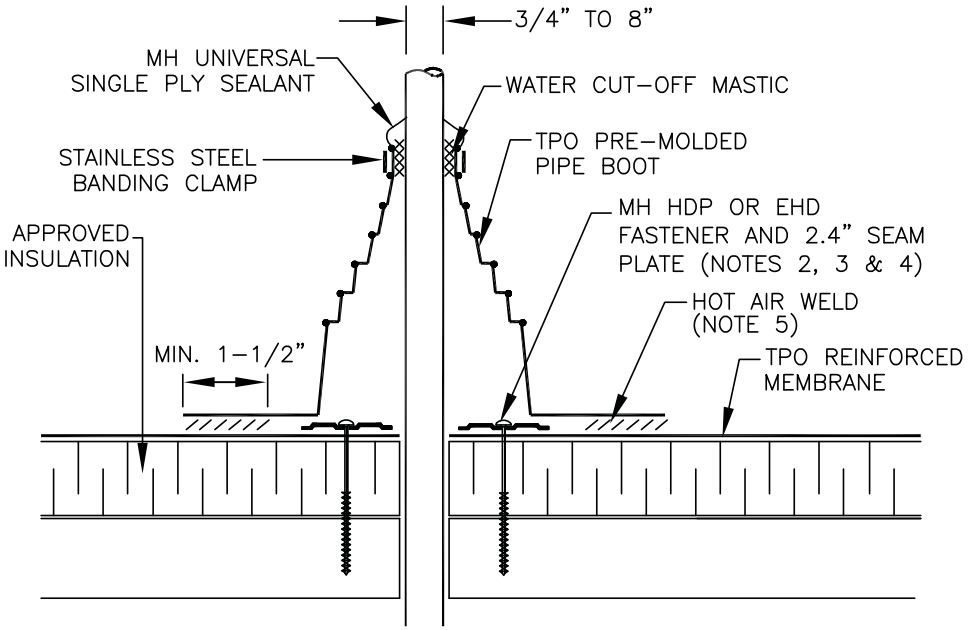

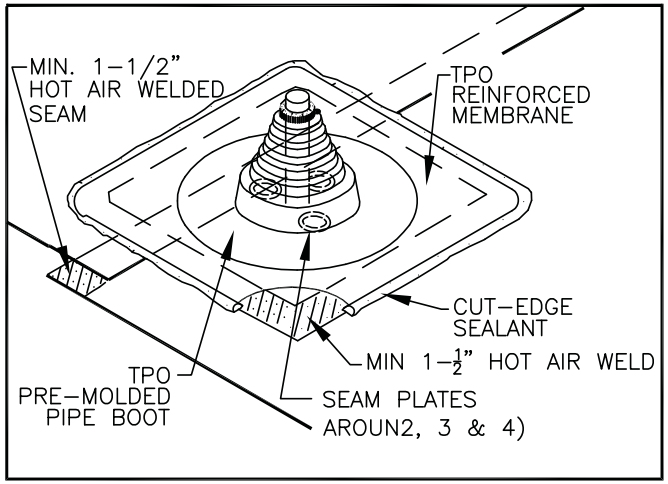

TARGET PATCH REQUIRED WHEN FIELD SEAM INTERSECTS PIPE BOOT FLANGE

NOTES:

1. REMOVE ALL LEAD AND OTHER FLASHING BEFORE INSTALLING FIELD FABRICATED PIPE SEAL.
2. ON MECHANICALLY ATTACHED SYSTEMS, INSTALL 3 FASTENERS AND PLATES AROUND PIPE EQUALLY SPACED. FASTENERS MAY ALSO BE POSITIONED MAXIMUM 12" FROM PIPE, FASTENED 12" O.C. AND FLASHED WITH TPO REINFORCED MEMBRANE.
3. FASTENERS AND SEAM PLATES ARE NOT REQUIRED ON ADHERED SYSTEMS UNLESS PROJECTION DIAMETER EXCEEDS 18".
4. IF SEAM PLATES CANNOT BE INSTALLED AS SHOWN THEY CAN BE POSITIONED OUTSIDE THE PIPE FLSHING FLANGE AS SHOWN ON DETAIL MHT-UN-521A
5. PIPE BOOT DECK FLANGE MUST BE HOT AIR WELDED A MINIMUM OF 1-1/2" BEYOND SEAM PLATES.
6. TEMPERATURE OF PIPE NOT TO EXCEED 160° F
7. INSTALL A SECTION OF TPO REINFORCED MEMBRANE OVER SEAM INTERSECTIONS PRIOR TO INSTALLING PRE-MOLDED PIPE BOOT - SEE INSET.
8. DO NOT CUT PIPE BOOTS TO PULL AROUND PROJECTION. PRE-MOLDED PIPE BOOTS MUST BE SLIPPED OVER THE PIPE.
9. PRE-MOLDED PIPE BOOTS ARE NOT TO BE USED AS PITCH PANS.

MULE-HIDE PRODUCTS CO., INC.	**PRE-MOLDED PIPE BOOT**	**DETAIL NO.:**
	SYSTEMS:	**MHT-UN-520**
	ALL TPO SYSTEMS	REVISION DATE: 10/2013

®

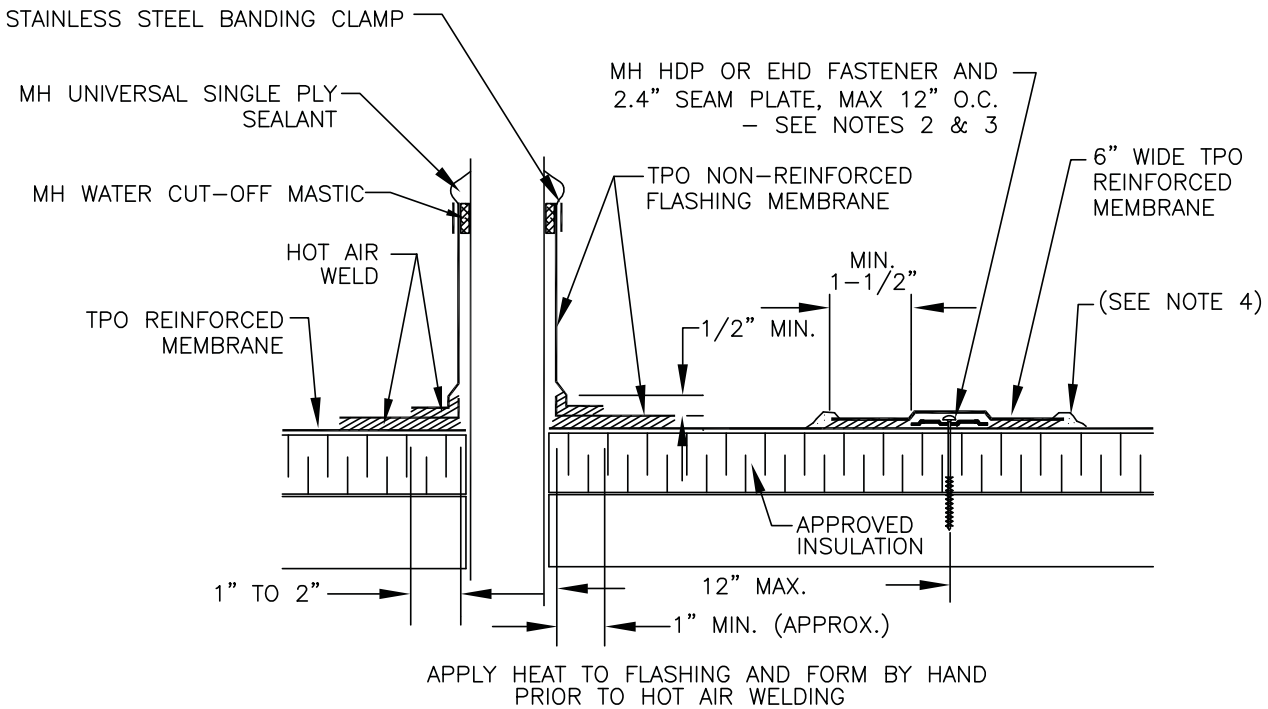

NOTES:

1. REMOVE ALL LEAD AND OTHER FLASHING BEFORE INSTALLING FIELD FABRICATED PIPE SEAL.
2. ON MECHANICALLY ATTACHED SYSTEMS, INSTALL A MINIMUM OF FOUR (4) 2.4" SEAM PLATES AROUND PROJECTIONS WITH A DIMENSION UP TO 6". ADDITIONAL SEAM PLATES WILL BE REQUIRED FOR PROJECTIONS WITH DIAMETERS GREATER THAN 6" AND SHALL BE SPACED 12" ON CENTER MAX.
3. FASTENERS AND SEAM PLATES ARE NOT REQUIRED ON ADHERED SYSTEMS UNLESS PROJECTION DIAMETER EXCEEDS 18".
4. APPROXIMATELY ⅛" DIAMETER BEAD OF CUT–EDGE SEALANT IS REQUIRED ON CUT EDGES OF TPO REINFORCED MEMBRANE.
5. TEMPERATURE OF PIPE NOT TO EXCEED 160° F.

MULE-HIDE PRODUCTS CO., INC.	**FIELD FABRICATED PIPE FLASHING WITH BANDING CLAMP** **SYSTEMS:** **ALL TPO SYSTEMS**	**DETAIL NO.:** **MHT-UN-521A** REVISION DATE: 10/2013

®

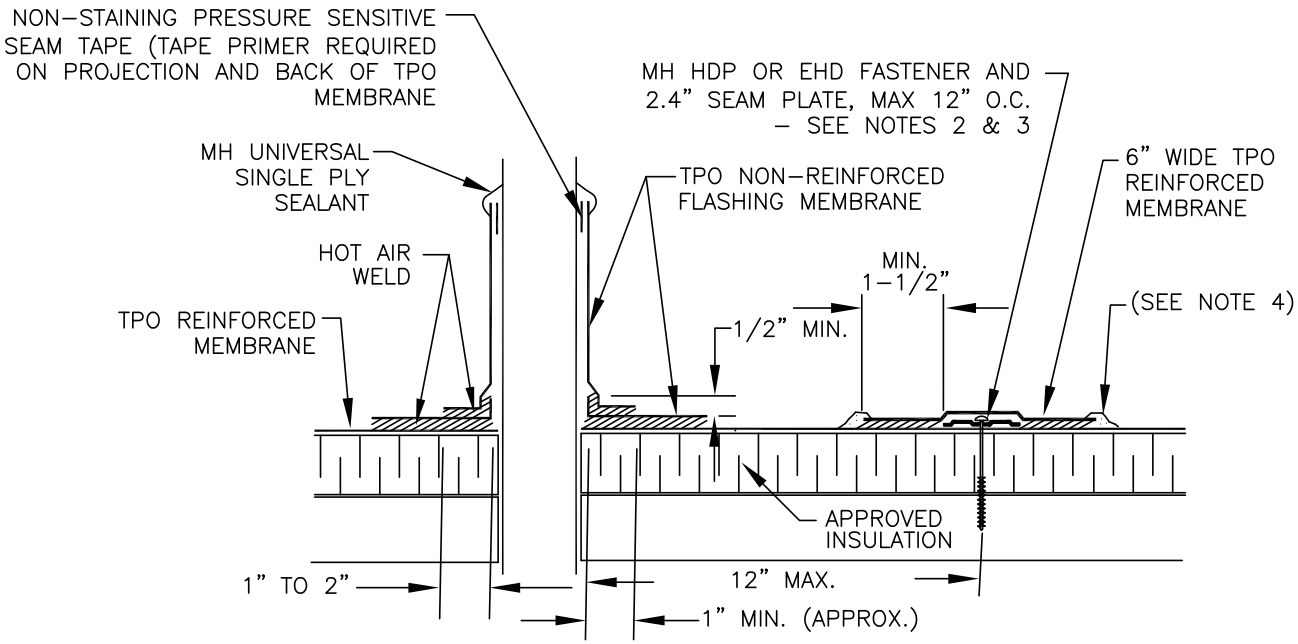

APPLY HEAT TO FLASHING AND FORM BY HAND PRIOR TO HOT AIR WELDING

NOTES:

1. REMOVE ALL LEAD AND OTHER FLASHING BEFORE INSTALLING FIELD FABRICATED PIPE SEAL.
2. ON A MECHANICALLY ATTACHED SYSTEM, INSTALL A MINIMUM OF FOUR (4) 2.4" SEAM PLATES AROUND PROJECTIONS WITH A DIMENSION UP TO 6". ADDITIONAL SEAM PLATES WILL BE REQUIRED FOR PROJECTIONS WITH DIAMETERS GREATER THAN 6" AND SHALL BE SPACED 12" ON CENTER MAX.
3. FASTENERS AND SEAM PLATES ARE NOT REQUIRED ON ADHERED SYSTEMS UNLESS PROJECTION DIAMETER EXCEEDS 18".
4. APPROXIMATELY ⅛" DIAMETER BEAD OF CUT–EDGE SEALANT IS REQUIRED ON CUT EDGES OF TPO REINFORCED MEMBRANE.
5. TEMPERATURE OF PIPE NOT TO EXCEED 160° F.

MULE-HIDE PRODUCTS CO., INC.	**FIELD FABRICATED PIPE FLASHING WITH SEAM TAPE** **SYSTEMS:** **ALL TPO SYSTEMS**	**DETAIL NO.:** **MHT-UN-521B** REVISION DATE: 10/2013

®

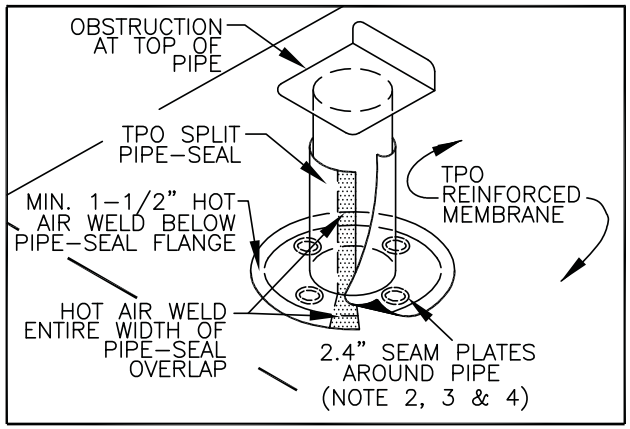

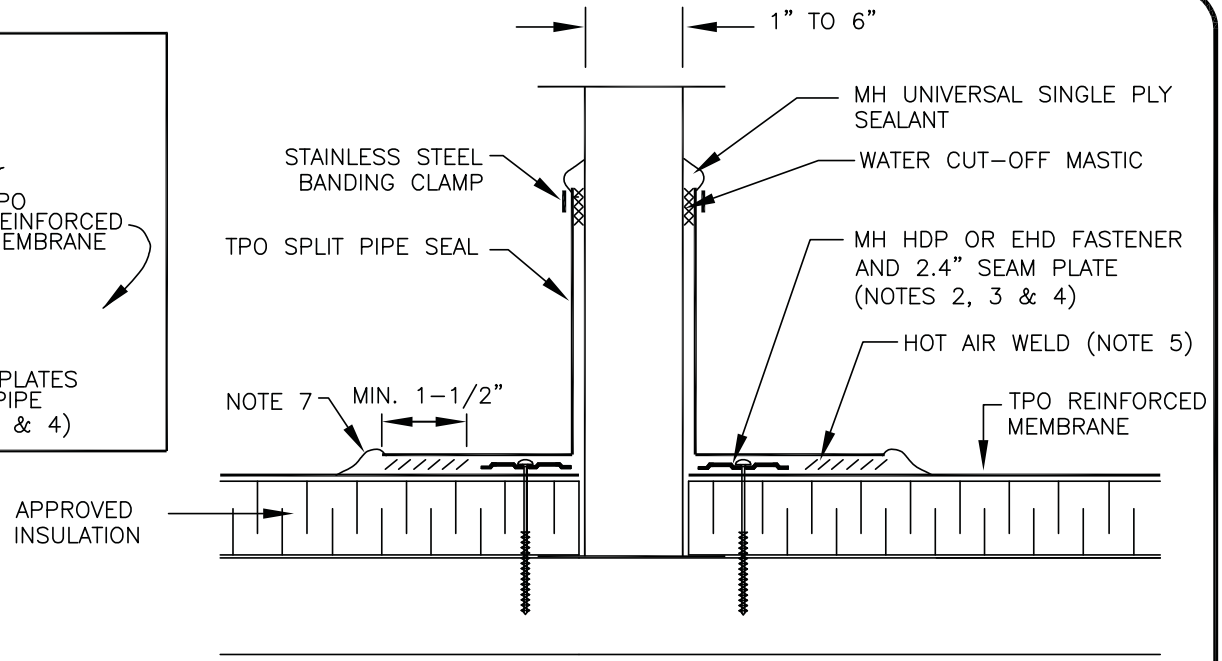

NOTES:

1. REMOVE ALL LEAD AND OTHER FLASHING BEFORE INSTALLING SPLIT PIPE SEAL.
2. ON MECHANICALLY ATTACHED SYSTEMS, INSTALL A MINIMUM OF FOUR (4) 2.4" SEAM PLATES AROUND PROJECTIONS WITH A DIMENSION UP TO 6". ADDITIONAL SEAM PLATES WILL BE REQUIRED FOR PROJECTIONS WITH DIAMETERS GREATER THAN 6" AND SHALL BE SPACED 12" ON CENTER MAX.
3. FASTENERS AND SEAM PLATES ARE NOT REQUIRED ON ADHERED SYSTEMS UNLESS PROJECTION DIAMETER EXCEEDS 18".
4. IF SEAM PLATES CANNOT BE INSTALLED AS SHOWN THEY CAN BE POSITIONED OUTSIDE THE PIPE FLSHING FLANGE AS SHOWN ON DETAIL MHT–UN–521A.
5. PIPE FLASHING DECK FLANGE MUST BE HOT AIR WELDED A MINIMUM OF 1–1/2" BEYOND SEAM PLATES.
6. TEMPERATURE OF PIPE NOT TO EXCEED 160° F.
7. APPROXIMATELY 1/8" DIAMETER BEAD OF CUT–EDGE SEALANT IS REQUIRED ON CUT EDGE OF TPO REINFORCED MEMBRANE.
8. TPO SPLIT PIPE BOOTS ARE NOT TO BE USED AS PITCH PANS.

MULE-HIDE PRODUCTS CO., INC.	**TPO SPLIT PIPE BOOT**	**DETAIL NO.:**
	SYSTEMS:	**MHT-UN-521C**
	ALL TPO SYSTEMS	REVISION DATE: 10/2013

®

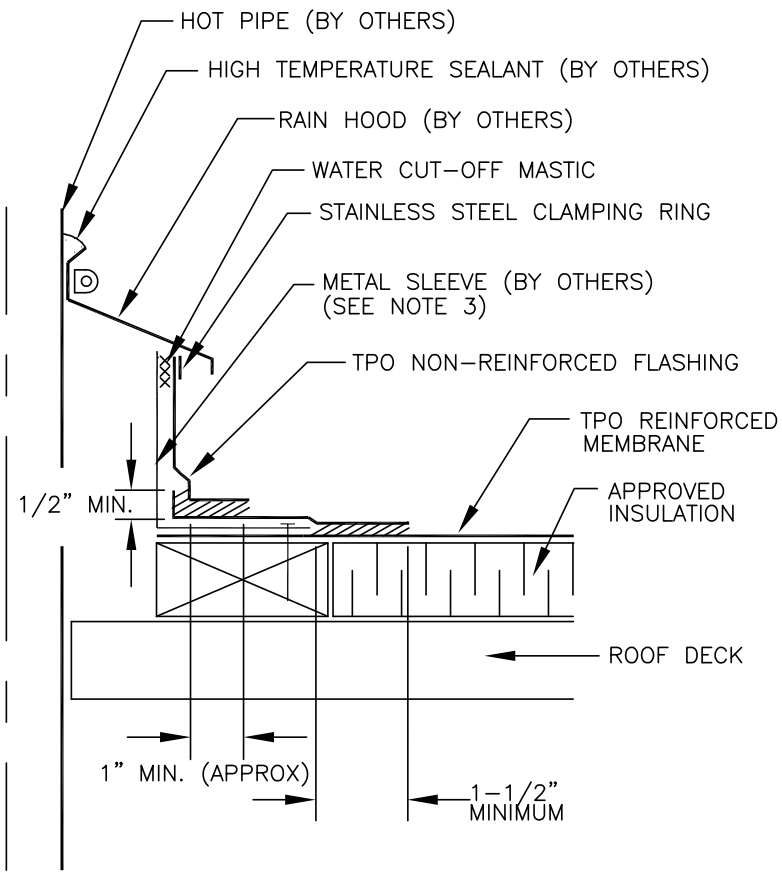

PRE–HEAT AND PRE–STRETCH TPO NON–REINFORCED FLASHING MEMBRANE TO FORM AROUND PIPE PRIOR TO HOT AIR WELDING IN PLACE

NOTES:

1. THIS DETAIL USED FOR FIELD–FABRICATED PIPE SEAL FOR USE WITH HOT PIPE, 160° F OR HOTTER.
2. TPO NON–REINFORCED FLASHING WRAPPED AROUND PIPE SHALL HAVE MINIMUM 1–1/2" VERTICAL HOT AIR WELD.
3. TEMPERATURE OF METAL SLEEVE MUST NOT EXCEED 160° F.

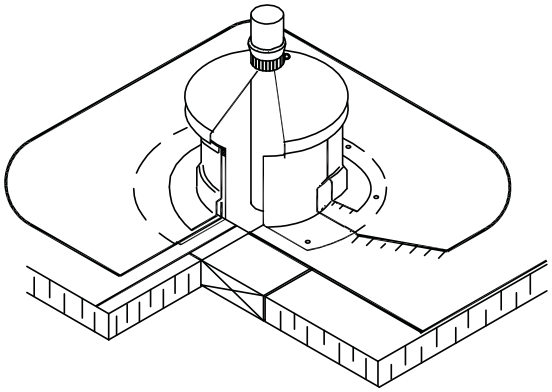

MULE-HIDE PRODUCTS CO., INC.	**HOT PIPE FLASHING WITH COLD SLEEVE**	**DETAIL NO.:**
	SYSTEMS:	**MHT-UN-522**
	ALL TPO SYSTEMS	REVISION DATE: 10/2013

®

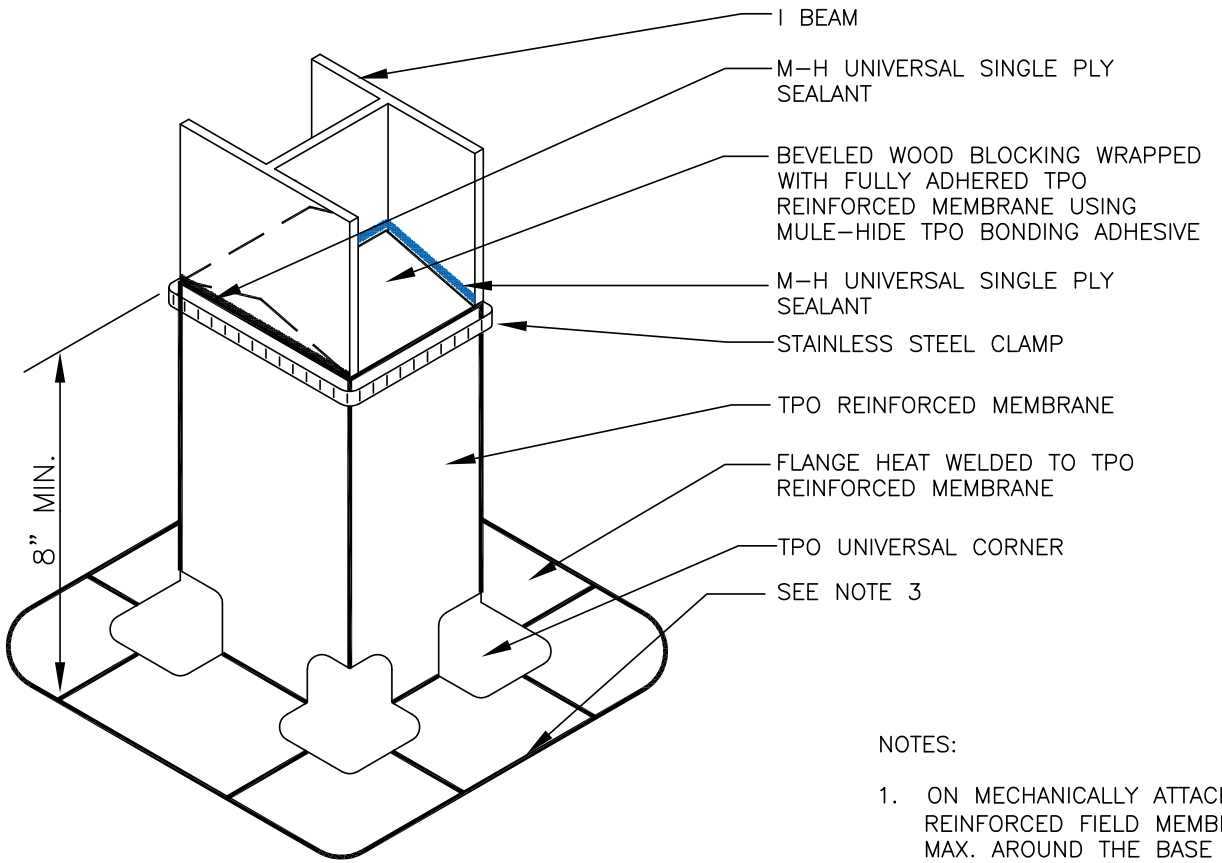

NOTES:

1. ON MECHANICALLY ATTACHED SYSTEMS, FASTEN TPO REINFORCED FIELD MEMBRANE (NOT SHOWN) 12" O.C. MAX. AROUND THE BASE OF THE BEAM.

2. WOOD BLOCKING MUST BE EMBEDDED IN A LAYER OF M–H UNIVERSAL SINGLE PLY SEALANT PRIOR TO FLASHING.

3. APPROXIMATELY ⅛" DIAMETER BEAD OF CUT–EDGE SEALANT IS REQUIRED ON CUT EDGES OF TPO REINFORCED MEMBRANE.

MULE-HIDE PRODUCTS CO., INC.	**I-BEAM SUPPORT FLASHING**	**DETAIL NO.:**
	SYSTEMS:	**MHT-UN-523**
	ALL TPO SYSTEMS	REVISION DATE: 10/2013

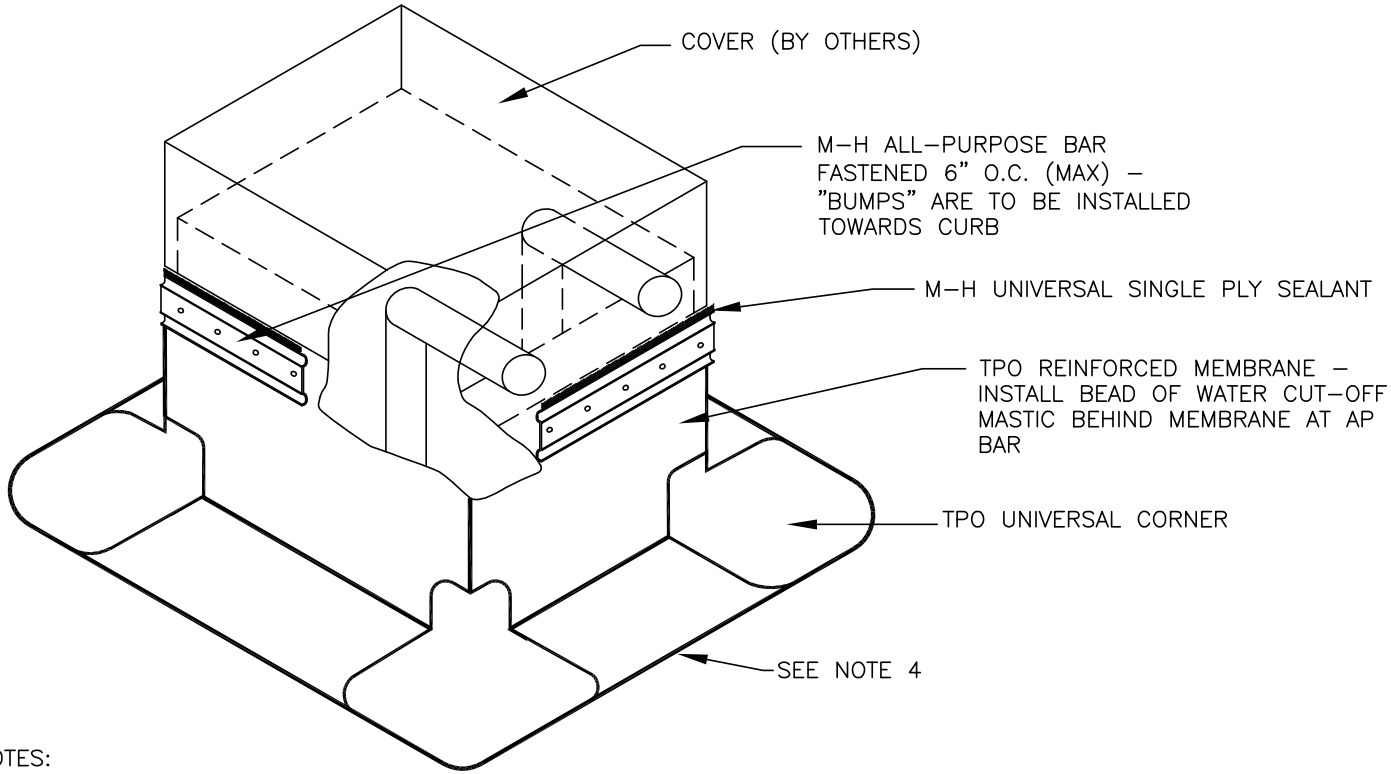

NOTES:

1. SLOPE TOP OF COVER AWAY FROM EXISTING PIPES.
2. IT IS THE CONTRACTOR'S RESPONSIBILITY TO SEAL AROUND THE PIPES AT THE COVER OPENINGS.
3. ON A MECHANICALLY ATTACHED SYSTEM, INSTALL A MINIMUM OF FOUR (4) 2.4" SEAM PLATES AROUND PROJECTIONS WITH A DIMENSION UP TO 6". ADDITIONAL SEAM PLATES WILL BE REQUIRED FOR PROJECTIONS WITH DIMENSIONS GREATER THAN 6" AND SHALL BE SPACED 12" ON CENTER MAX.
4. APPROXIMATELY ⅛" DIAMETER BEAD OF CUT–EDGE SEALANT IS REQUIRED ON CUT EDGES OF TPO REINFORCED MEMBRANE.

MULE-HIDE PRODUCTS CO., INC.	**MULTIPLE PIPE PENETRATION**	**DETAIL NO.:**
	SYSTEMS:	**MHT-UN-525**
	ALL TPO SYSTEMS	REVISION DATE: 10/2013

®

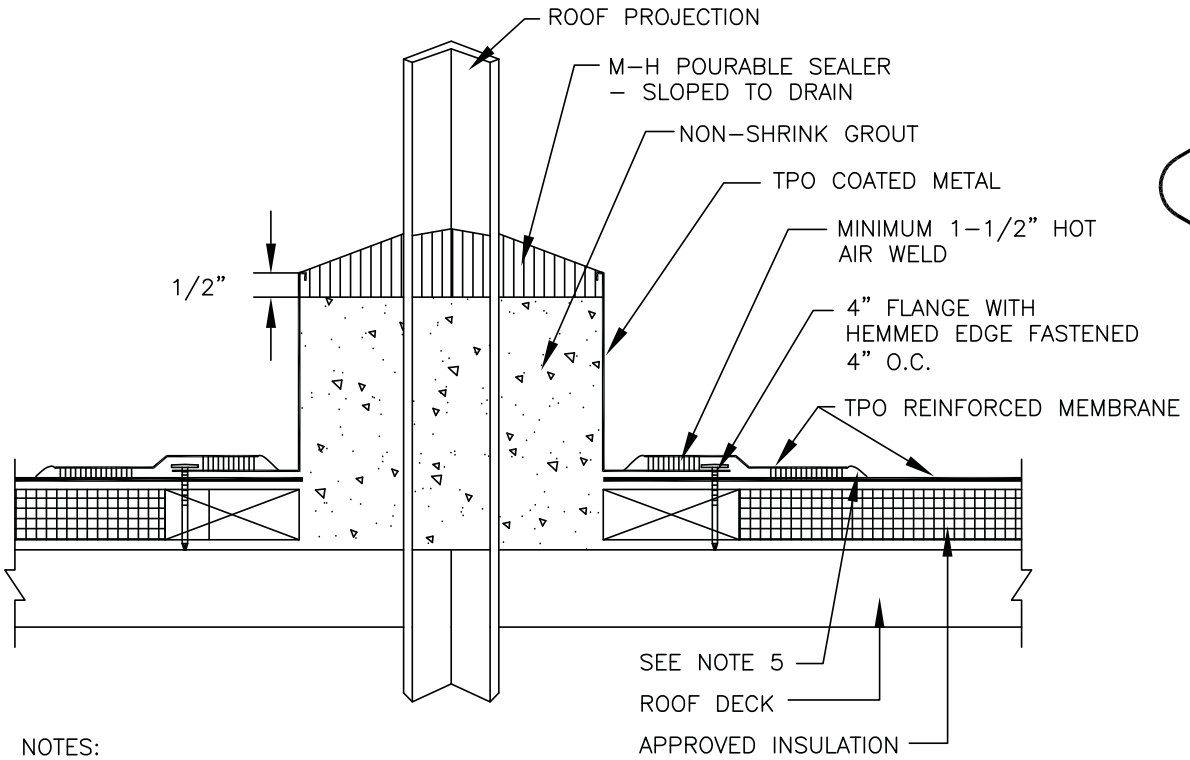

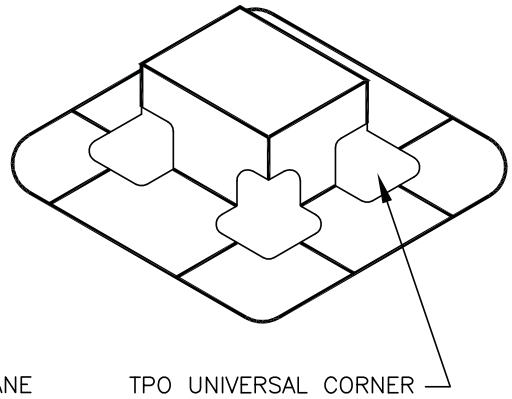

NOTES:

1. BEND TPO COATED METAL TO FORM A PITCH PAN AS SHOWN.
2. ALLOW 2" CLEARANCE AROUND THE PROJECTION
3. ALLOW GROUT TO CURE AND DRY BEFORE APPLYING POURABLE SEALER.
4. INSIDE SURFACE OF TPO COATED METAL PITCH PAN (BARE METAL SIDE) AND OUTSIDE FACES OF PROJECTION MUST BE CLEAN AND PRIMED WITH MULE–HIDE TAPE PRIMER.
5. APPROXIMATELY ⅛" DIAMETER BEAD OF CUT–EDGE SEALANT IS REQUIRED ON CUT EDGES OF TPO REINFORCED MEMBRANE.
6. PRE–MOLDED PIPE BOOTS ARE NOT TO BE USED AS PITCH PANS.

MULE-HIDE PRODUCTS CO., INC.	**PITCH PAN MEMBRANE COATED METAL**	**DETAIL NO.:**
	SYSTEMS:	**MHT-UN-526**
	ALL TPO SYSTEMS	REVISION DATE: 10/2013

®

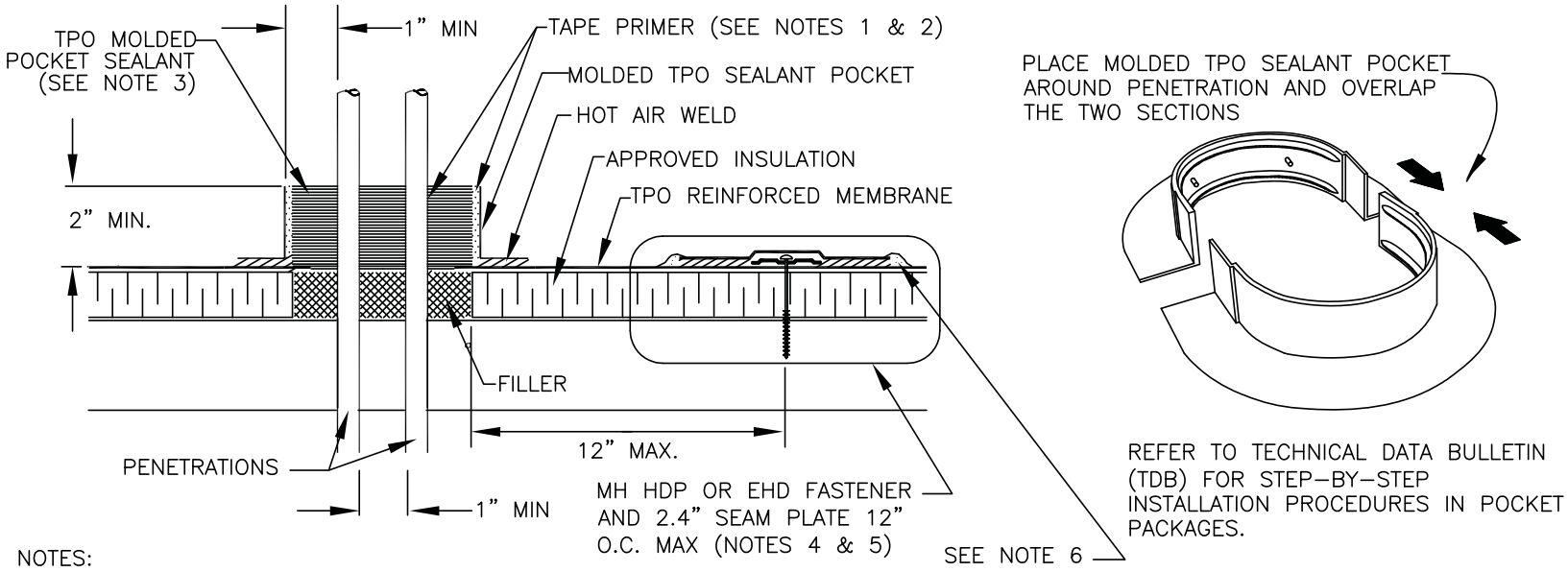

NOTES:

1. TAPE PRIMER MUST BE APPLIED TO ALL INSIDE SURFACES AND PENETRATIONS PRIOR TO FILLING WITH SEALANT.
2. FILL POCKET COMPLETELY WITH THERMOPLASTIC POURABLE SEALER UNTIL THE RIM IS COVERED WITH SEALANT, ENSURE ALL VOIDS ARE FILLED.
3. SEALANT POCKET TO BE MINIMUM 1" FROM PENETRATION ON ANY SIDE.
4. ON MECHANICALLY FASTENED SYSTEMS, INSTALL A MINIMUM OF FOUR (4) 2.4" SEAM PLATES AROUND PROJECTIONS WITH A DIMENSION UP TO 6". ADDITIONAL SEAM PLATES WILL BE REQUIRED FOR PROJECTIONS WITH DIAMETERS GREATER THAN 6" AND SHALL BE SPACED 12" ON CENTER MAX.
5. FASTENERS AND SEAM PLATES ARE NOT REQUIRED ON ADHERED SYSTEMS UNLESS PROJECTION DIAMETER EXCEEDS 18".
6. APPROXIMATELY ⅛" DIAMETER BEAD OF CUT-EDGE SEALANT IS REQUIRED ON CUT EDGES OF TPO REINFORCED MEMBRANE.
7. TEMPERATURE OF PENETRATION NOT TO EXCEED 160° F.
8. PRE-MOLDED PIPE BOOTS ARE NOT TO BE USED AS PITCH PANS.

MULE-HIDE PRODUCTS CO., INC.	**TPO MOLDED SEALANT POCKET**	**DETAIL NO.:**
	SYSTEMS:	**MHT-UN-527**
	ALL TPO SYSTEMS	REVISION DATE: 10/2013

®

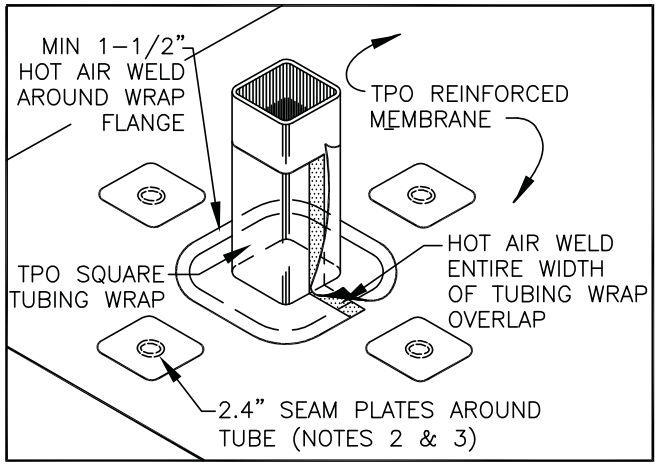

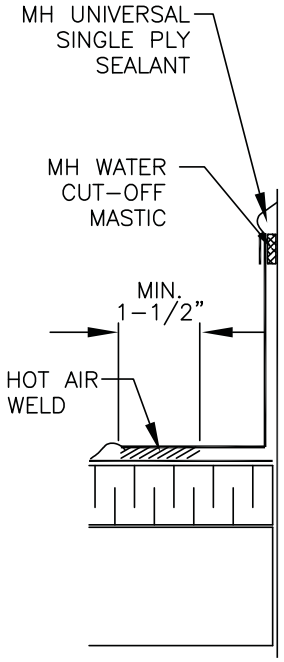

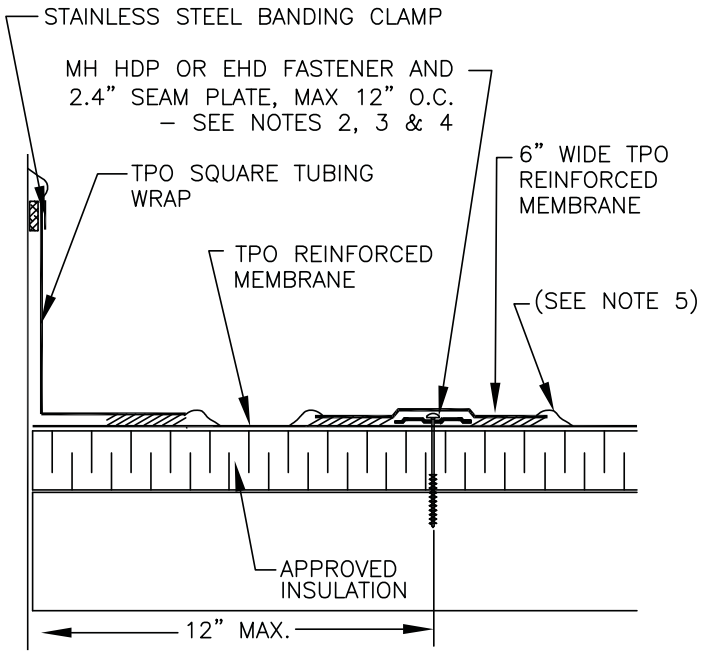

NOTES:

1. REMOVE ALL LEAD AND OTHER FLASHING BEFORE INSTALLING FIELD FABRICATED PIPE SEAL.
2. ON MECHANICALLY FASTENED SYSTEMS, INSTALL A MINIMUM OF FOUR (4) 2.4" SEAM PLATES AROUND PROJECTIONS WITH A DIMENSION UP TO 6". ADDITIONAL SEAM PLATES WILL BE REQUIRED FOR PROJECTIONS WITH DIAMETERS GREATER THAN 6" AND SHALL BE SPACED 12" ON CENTER MAX.
3. FASTENERS AND SEAM PLATES ARE NOT REQUIRED ON ADHERED SYSTEMS UNLESS PROJECTION DIAMETER EXCEEDS 18".
4. PLATES MAY BE POSITIONED INSIDE (OR BELOW) THE PIPE FLASHING FLANGE AS SHOWN ON DETAIL MHT–UN–521C.
5. APPROXIMATELY ⅛" DIAMETER BEAD OF CUT–EDGE SEALANT IS REQUIRED ON CUT EDGES OF TPO REINFORCED MEMBRANE.
6. SQUARE TUBING WRAP IS NOT TO BE USED AS A PITCH PAN.

MULE-HIDE PRODUCTS CO., INC.	**PREFABRICATED SQUARE TUBING WRAP**	**DETAIL NO.:**
	SYSTEMS:	**MHT-UN-528**
	ALL TPO SYSTEMS	REVISION DATE: 10/2013

®

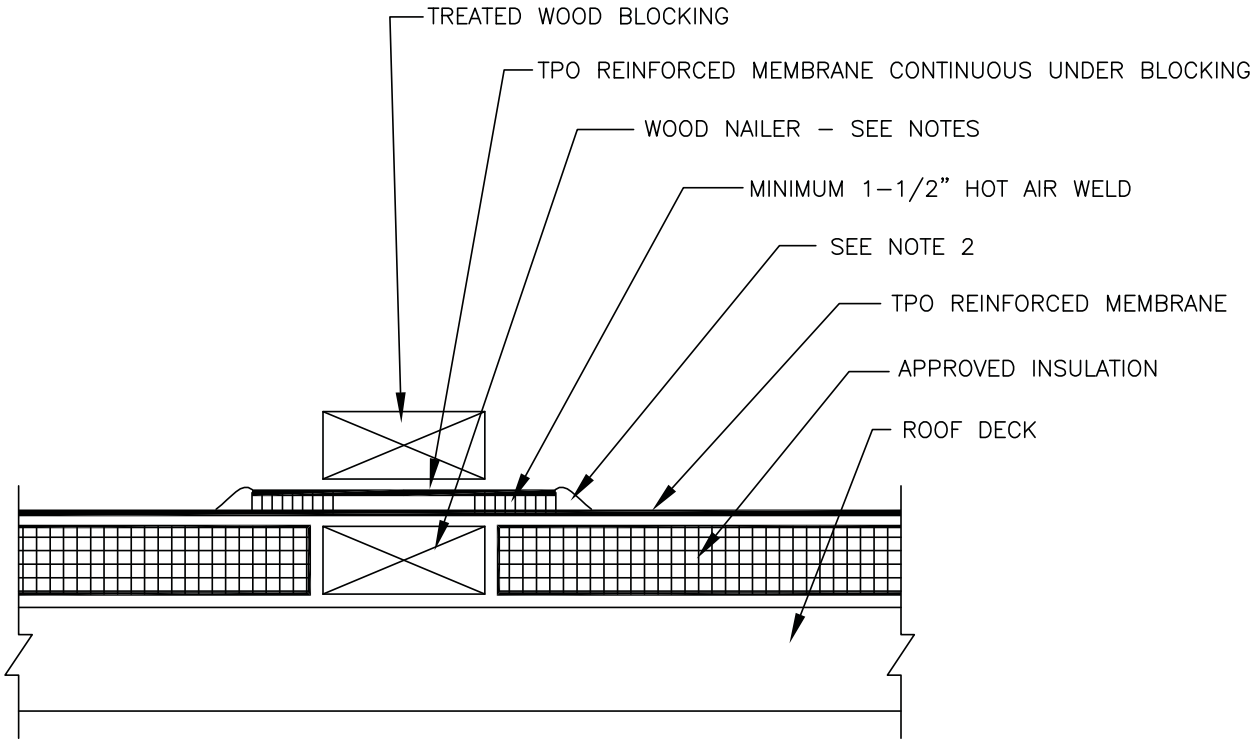

NOTES:

1. IF THE INSULATION COMPRESSVIE STRENGTH IS INSUFFICIENT FOR THE EQUIPMENT WEIGHT, INSTALL WOOD NAILERS UNDER THE EQUIPMENT CARRYING SLEEPER, MATCHING THE HEIGHT OF THE INSULATION.

2. APPROXIMATELY ⅛" DIAMETER BEAD OF CUT–EDGE SEALANT IS REQUIRED ON CUT EDGES OF TPO REINFORCED MEMBRANE.

MULE-HIDE PRODUCTS CO., INC.	**WOOD SLEEPER**	**DETAIL NO.:**
	SYSTEMS:	**MHT-UN-530**
	ALL TPO SYSTEMS	REVISION DATE: 10/2013

®

NOTES:

1. POSITION SEAM PLATES 1/2" TO 1" FROM EDGE OF DECK MEMBRANE.
2. APPROXIMATELY 1/8" DIAMETER BEAD OF CUT-EDGE SEALANT IS REQUIRED ON CUT EDGES OF TPO REINFORCED MEMBRANE.
3. SLEEPER HEIGHT SHOULD BE SUFFICIENT TO ELEVATE THE EQUIPMENT SUPPORT BRACKET ABOVE THE WATER LINE.
4. SLEEPER SHALL BE FULLY FLASHED TO COMPLETELY SEAL SLEEPER

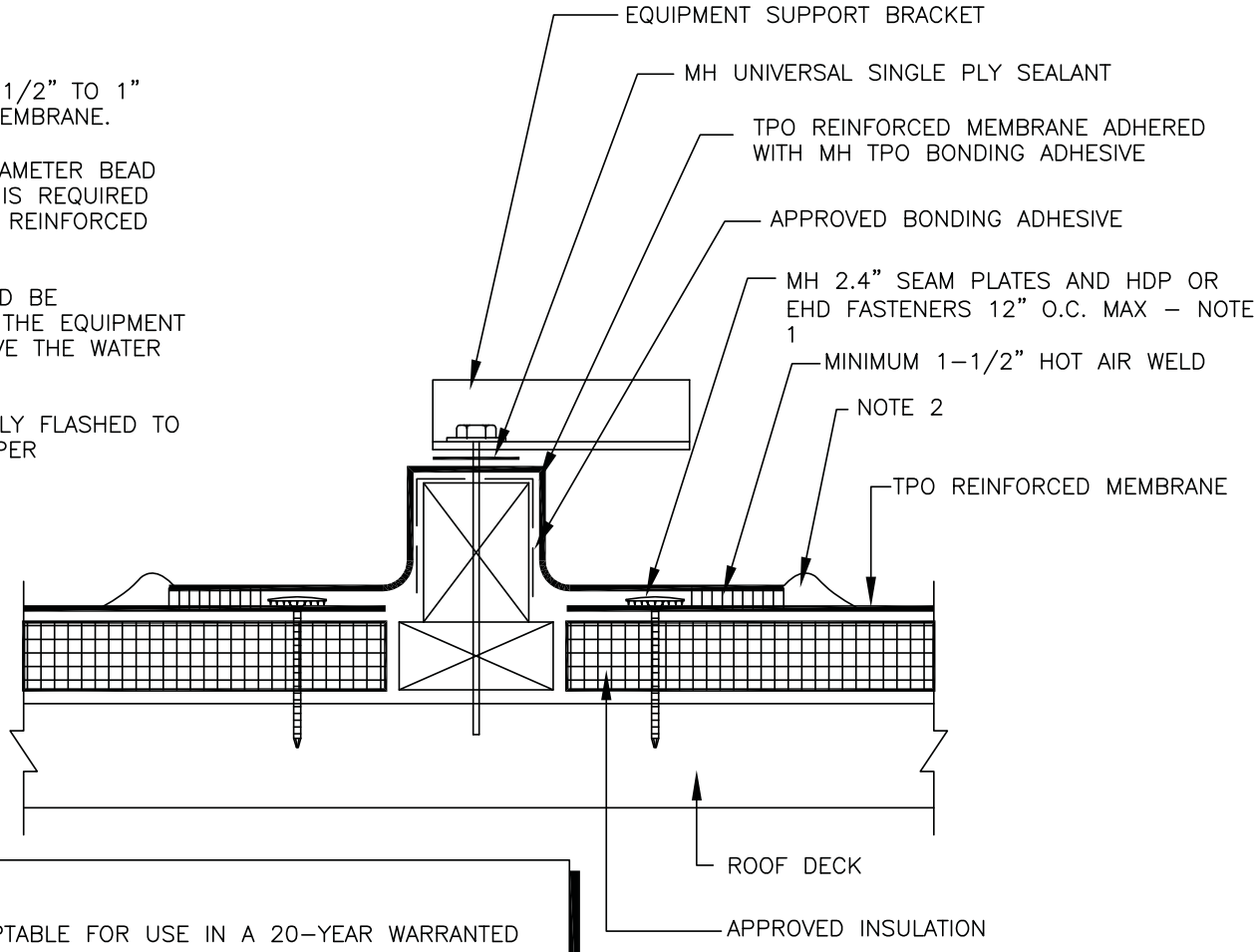

NOTE:

THIS DETAIL IS NOT ACCEPTABLE FOR USE IN A 20-YEAR WARRANTED SYSTEM.

FOR A 20-YEAR WARRANTED SYSTEM INSTALL UNIT ON RAISED PLATFORM WITH SUPPORTS FLASHED AS SHOWN IN DETAIL MHT-UN-521C.

MULE-HIDE PRODUCTS CO., INC.	**FIXED EQUIPMENT SUPPORT**	**DETAIL NO.:**
	SYSTEMS:	**MHT-UN-531**
	ALL TPO SYSTEMS	REVISION DATE: 10/2013

®

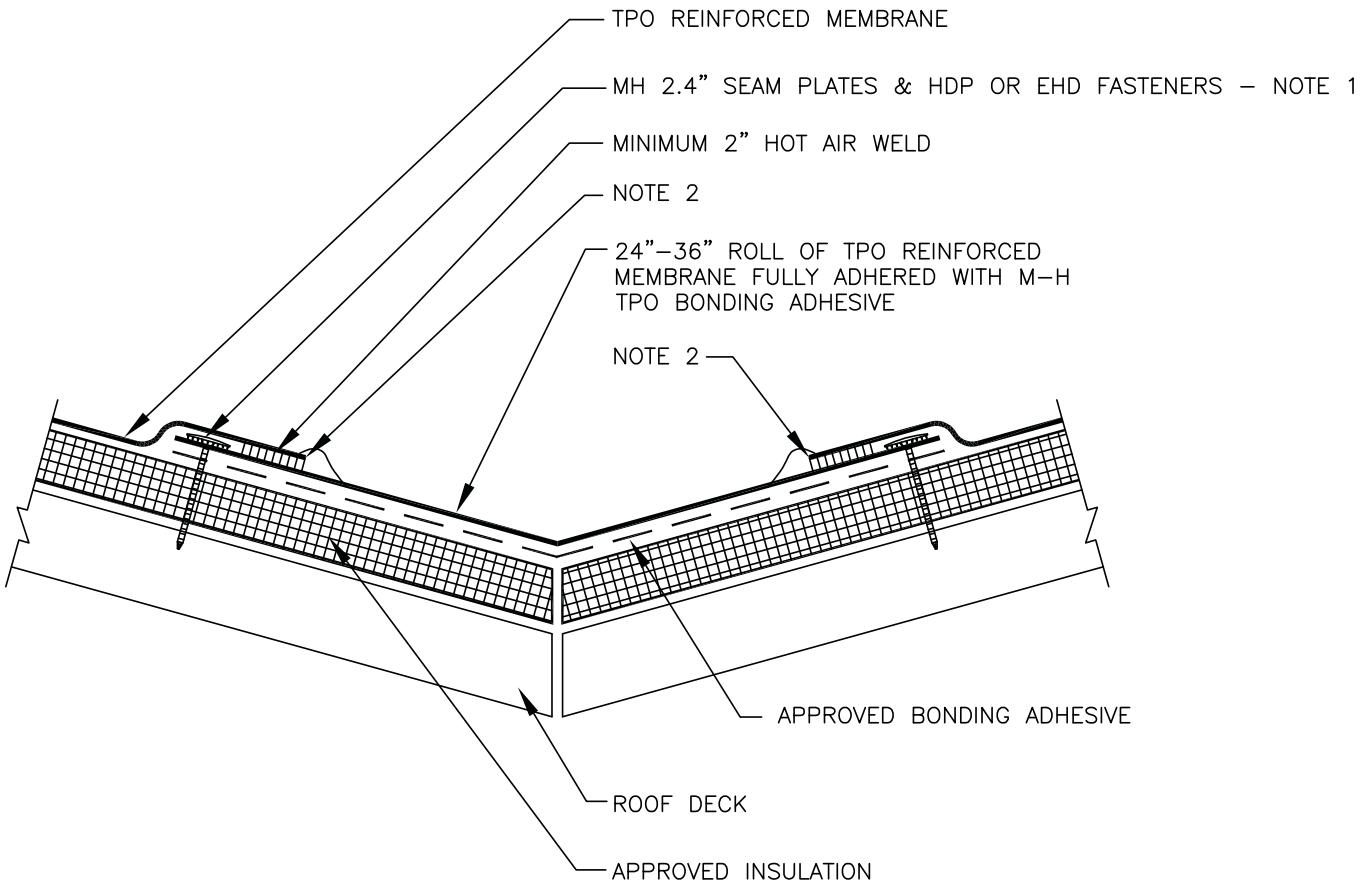

NOTES:

1. MEMBRANE FASTENER SPACING NOT TO EXCEED 12" O.C.
2. APPROXIMATELY 1/8" DIAMETER BEAD OF CUT–EDGE SEALANT IS REQUIRED ON CUT EDGES OF TPO REINFORCED MEMBRANE.

NOTE:

THIS DETAIL IS ACCEPTABLE FOR USE IN A 20–YEAR WARRANTED SYSTEM

MULE-HIDE PRODUCTS CO., INC.	**VALLEY FLASHING**	**DETAIL NO.:**
	SYSTEMS:	**MHT-MA-601A**
	MECHANICALLY ATTACHED	REVISION DATE: 10/2013

®

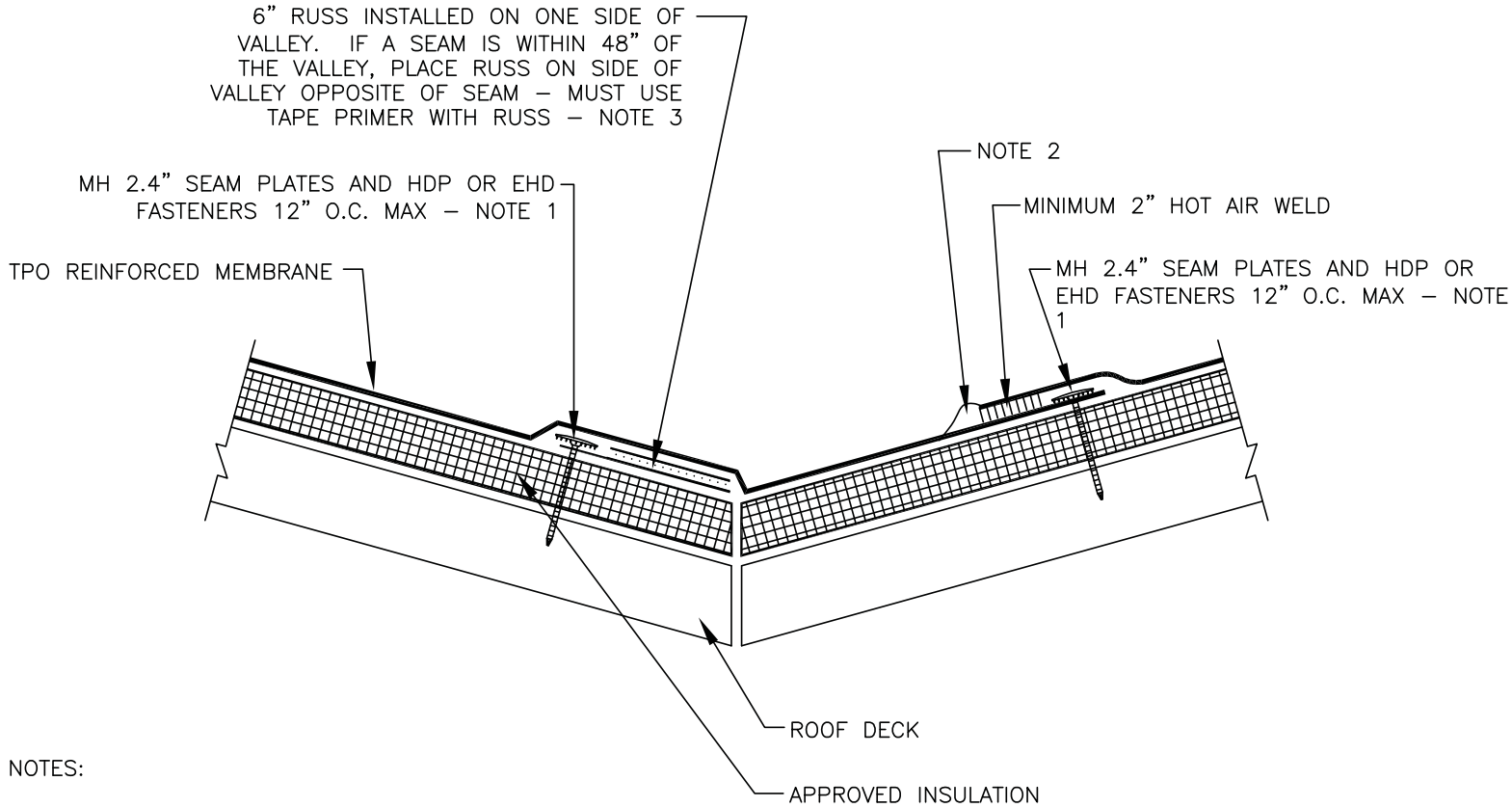

NOTES:

1. MEMBRANE FASTENER SPACING NOT TO EXCEED 12" O.C.
2. APPROXIMATELY 1/8" DIAMETER BEAD OF CUT–EDGE SEALANT IS REQUIRED ON CUT EDGES OF TPO REINFORCED MEMBRANE.
3. RUSS PRODUCTS CANNOT BE USED WITH FLEECEBACK OR SELF ADHERING MEMBRANES.

NOTE:

THIS DETAIL IS ACCEPTABLE FOR USE IN A 20–YEAR WARRANTED SYSTEM

MULE-HIDE PRODUCTS CO., INC.	**VALLEY FLASHING 6" RUSS**	**DETAIL NO.:**
	SYSTEMS:	**MHT-MA-601B**
	MECHANICALLY ATTACHED	REVISION DATE: 10/2013

®

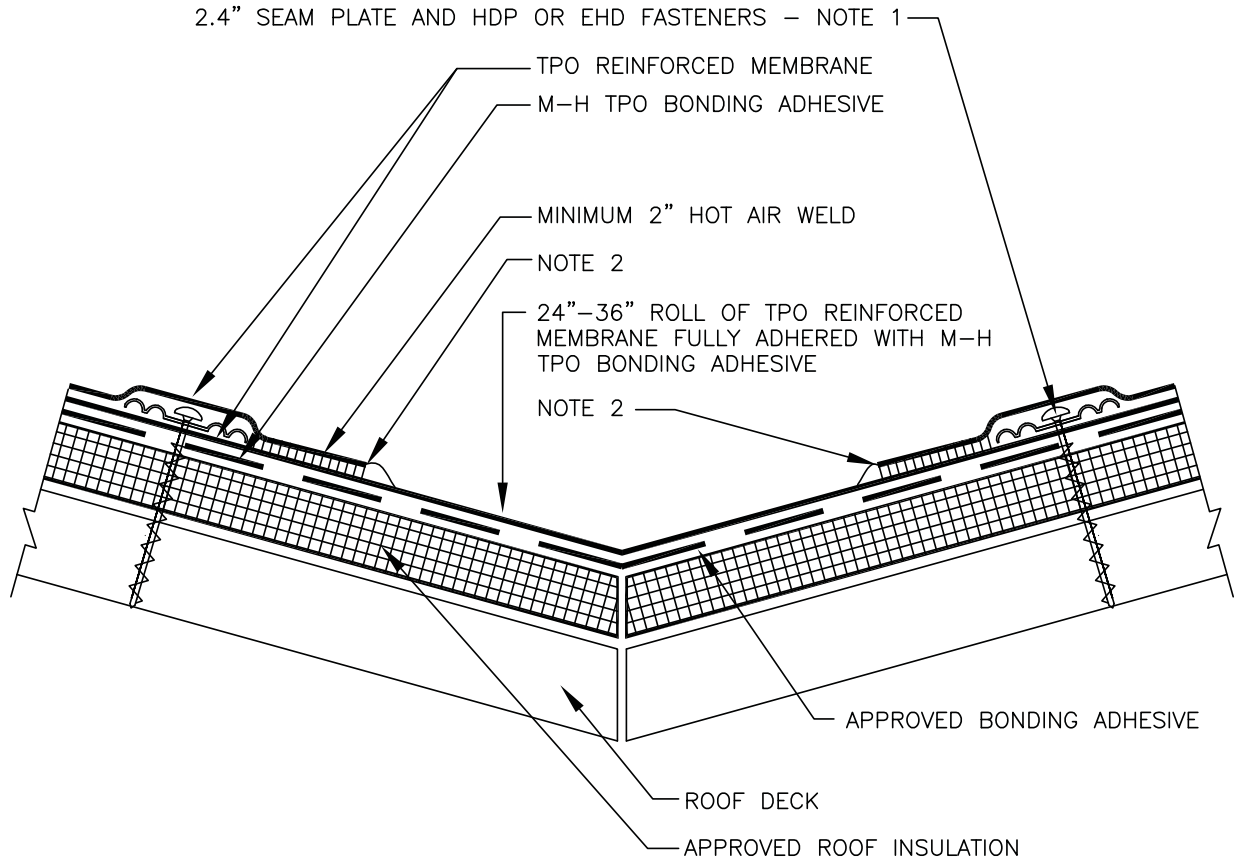

NOTES:

1. MEMBRANE FASTENER SPACING NOT TO EXCEED 12" O.C.
2. APPROXIMATELY 1/8" DIAMETER BEAD OF CUT–EDGE SEALANT IS REQUIRED ON CUT EDGES OF TPO REINFORCED MEMBRANE.

NOTE:

THIS DETAIL IS ACCEPTABLE FOR USE IN A 20–YEAR WARRANTED SYSTEM

MULE-HIDE PRODUCTS CO., INC.	**VALLEY FLASHING**	**DETAIL NO.:**
	SYSTEMS:	**MHT-FA-601C**
	FULLY ADHERED	REVISION DATE: 10/2013

®

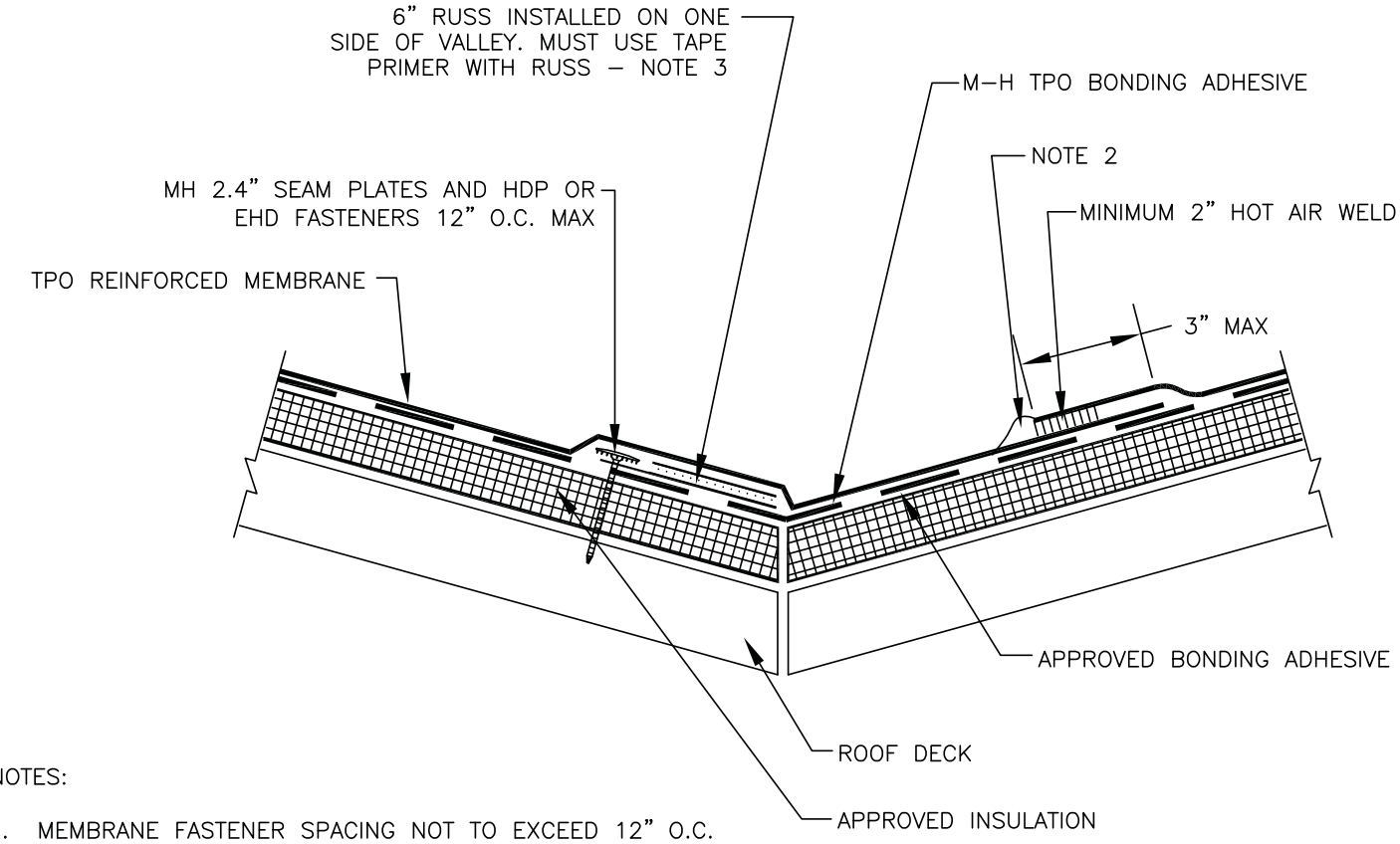

NOTES:

1. MEMBRANE FASTENER SPACING NOT TO EXCEED 12" O.C.
2. APPROXIMATELY 1/8" DIAMETER BEAD OF CUT–EDGE SEALANT IS REQUIRED ON CUT EDGES OF TPO REINFORCED MEMBRANE.
3. RUSS PRODUCTS CANNOT BE USED WITH FLEECEBACK OR SELF ADHERING MEMBRANES.

NOTE:

THIS DETAIL IS ACCEPTABLE FOR USE IN A 20–YEAR WARRANTED SYSTEM

MULE-HIDE PRODUCTS CO., INC.	**VALLEY FLASHING 6" RUSS**	**DETAIL NO.:**
	SYSTEMS:	**MHT-FA-601D**
	FULLY ADHERED	REVISION DATE: 10/2013

®

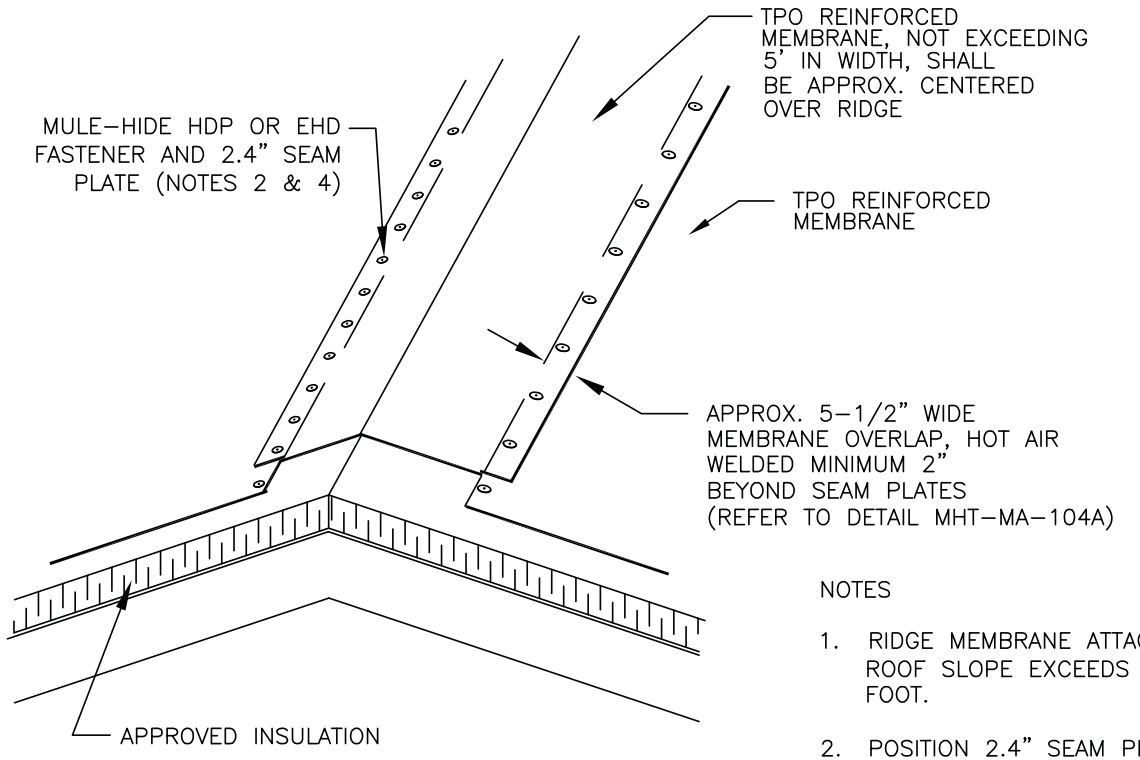

NOTES

1. RIDGE MEMBRANE ATTACHMENT IS ONLY REQUIRED WHEN ROOF SLOPE EXCEEDS 1–1/2" TO ONE HORIZONTAL FOOT.
2. POSITION 2.4" SEAM PLATES 1/2" MINIMUM TO 1" MAXIMUM FROM THE EDGE OF THE DECK MEMBRANE.
3. APPROXIMATELY 1/8" DIAMETER BEAD OF CUT–EDGE SEALANT IS REQUIRED ON CUT EDGES OF TPO REINFORCED MEMBRANE.
4. REFER TO SPECIFICATION FOR ACCEPTABLE MULE–HIDE FASTENERS AND FASTENING DENSITY.

MULE-HIDE PRODUCTS CO., INC.	**RIDGE SHEET LAYOUT**	**DETAIL NO.:**
	SYSTEMS:	**MHT-MA-602A**
	MECHANICALLY ATTACHED	REVISION DATE: 10/2013

®

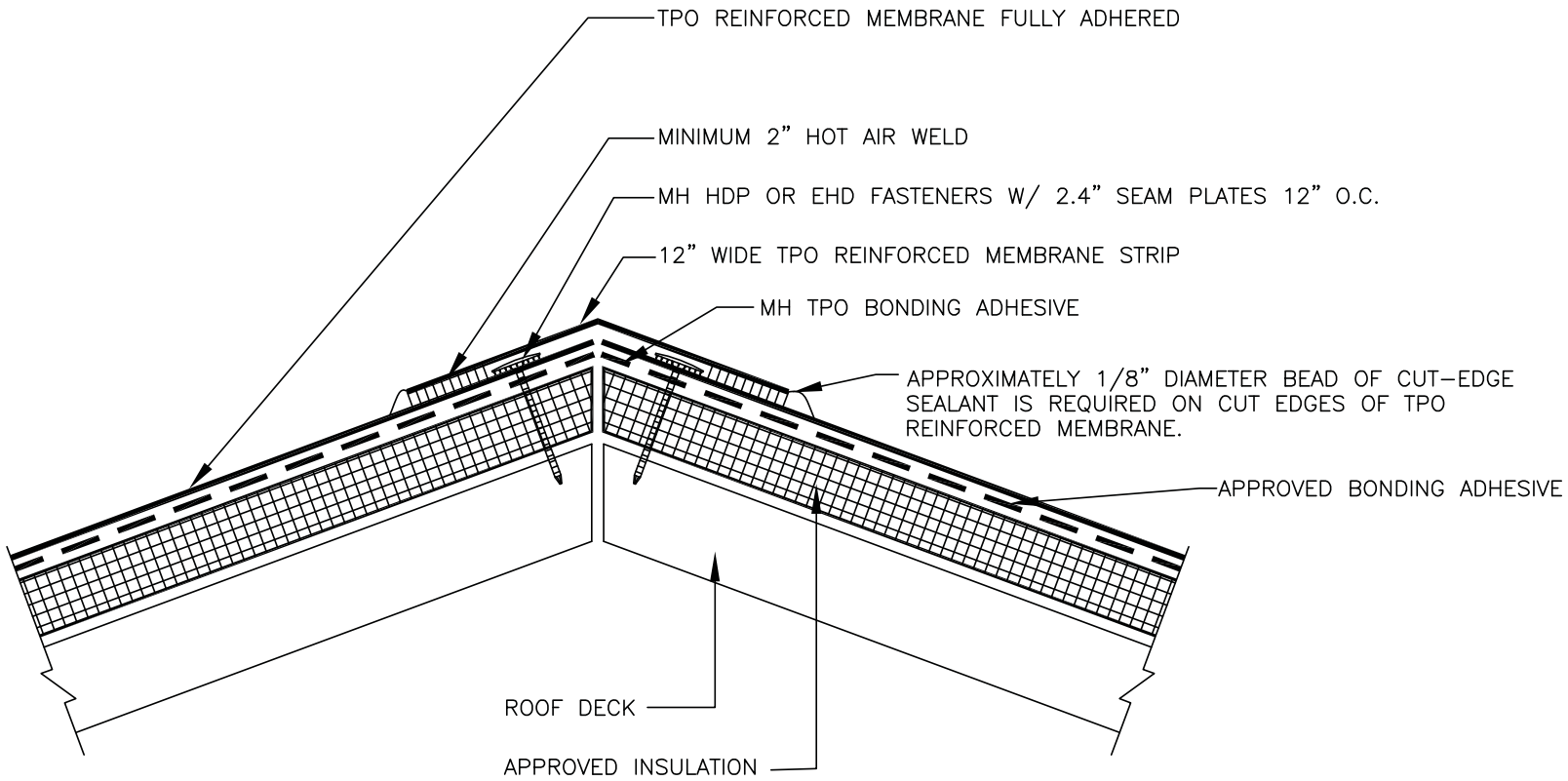

NOTES:

MEMBRANE FASTENER SPACING NOT TO EXCEED 12" O.C.

MULE-HIDE PRODUCTS CO., INC.	**RIDGE FLASHING**	**DETAIL NO.:**
	SYSTEMS:	**MHT-FA-602B**
	FULLY ADHERED	REVISION DATE: 10/2013

®

NOTES:

1. POSITION SEAM PLATES 1/2" TO 1" FROM EDGE OF DECK MEMBRANE.

2. APPROXIMATELY 1/8" DIAMETER BEAD OF CUT–EDGE SEALANT IS REQUIRED ON CUT EDGES OF TPO REINFORCED MEMBRANE.

NOTE:

THIS DETAIL ONLY INSTALLED WHEN CURB IS PARALLEL TO ROOF SLOPE.

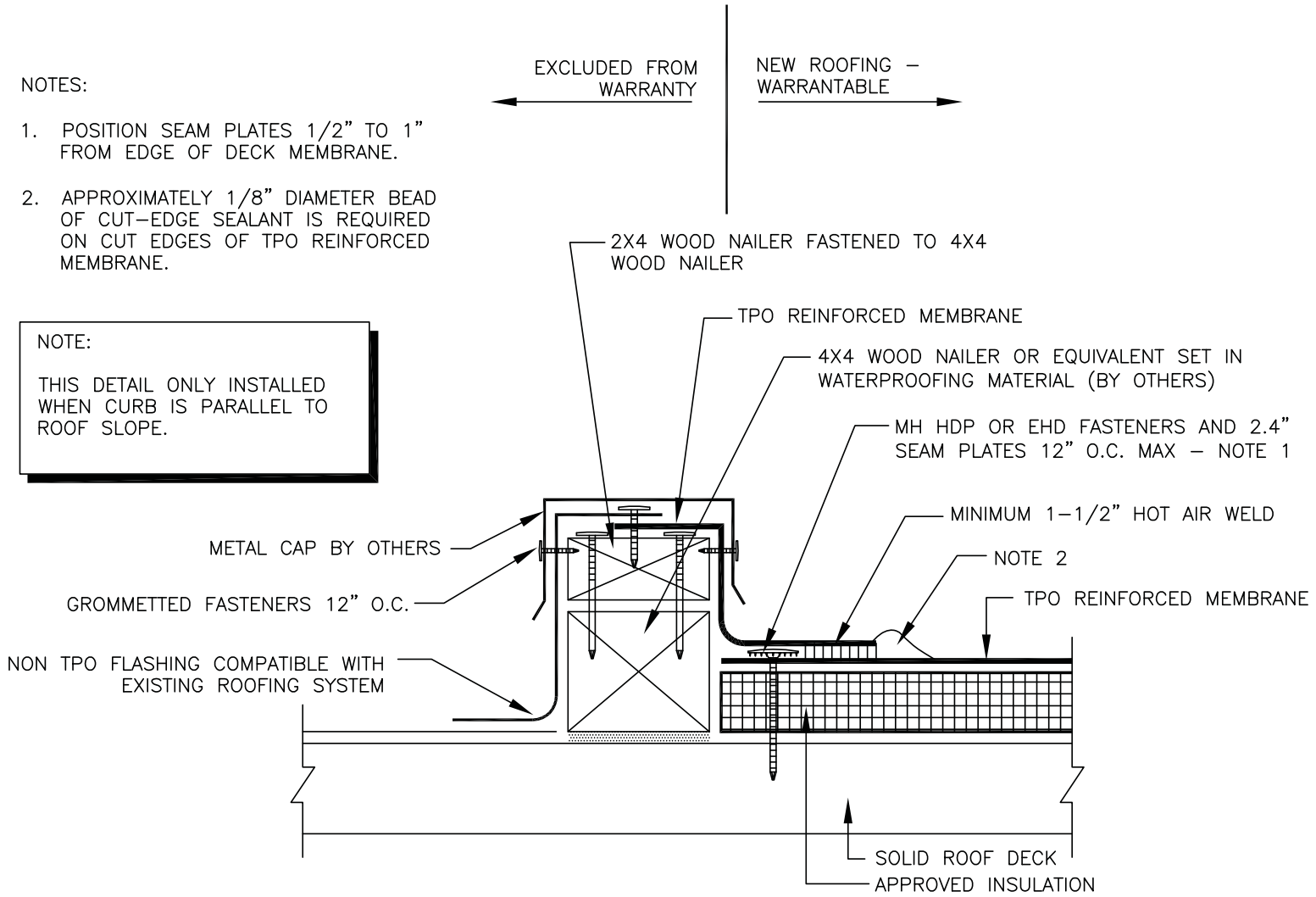

MULE-HIDE PRODUCTS CO., INC.	**TIE-IN TO SOLID DECK WITH CURB CURB PARALLEL TO SLOPE WITH TEAR OFF** **SYSTEMS:** **ALL TPO SYSTEMS**	**DETAIL NO.:** **MHT-UN-609** REVISION DATE: 10/2013

®

NOTES:

1. CLEAN AND PRIME AN 18" WIDE STRIP OF THE EXISTING ROOF SURFACE.
2. SET TPO REINFORCED MEMBRANE IN MULE–HIDE #420 MOD BIT ADHESIVE, BRUSH GRADE ON TOP OF EXISTING BUILT UP ROOFING.
3. USE ONE PLY OF MULE–HIDE SA BASE AND ONE PLY OF MULE–HIDE SA CAP SHEET TO PRIMED SURFACE OR SET 2 PLIES OF TYPE VI FIBERGLASS FELTS IN LAYERS OF MULE–HIDE #420 MOD BIT ADHESIVE, BRUSH GRADE. BOTTOM LAYER – 9" WIDE AND TOP LAYER – 12" WIDE (MIN).
4. COAT SURFACE WITH MULE–HIDE #102 FIBRATED ROOF COATING.
5. APPROXIMATELY 1/8" DIAMETER BEAD OF CUT–EDGE SEALANT IS REQUIRED ON CUT EDGES OF TPO REINFORCED MEMBRANE.

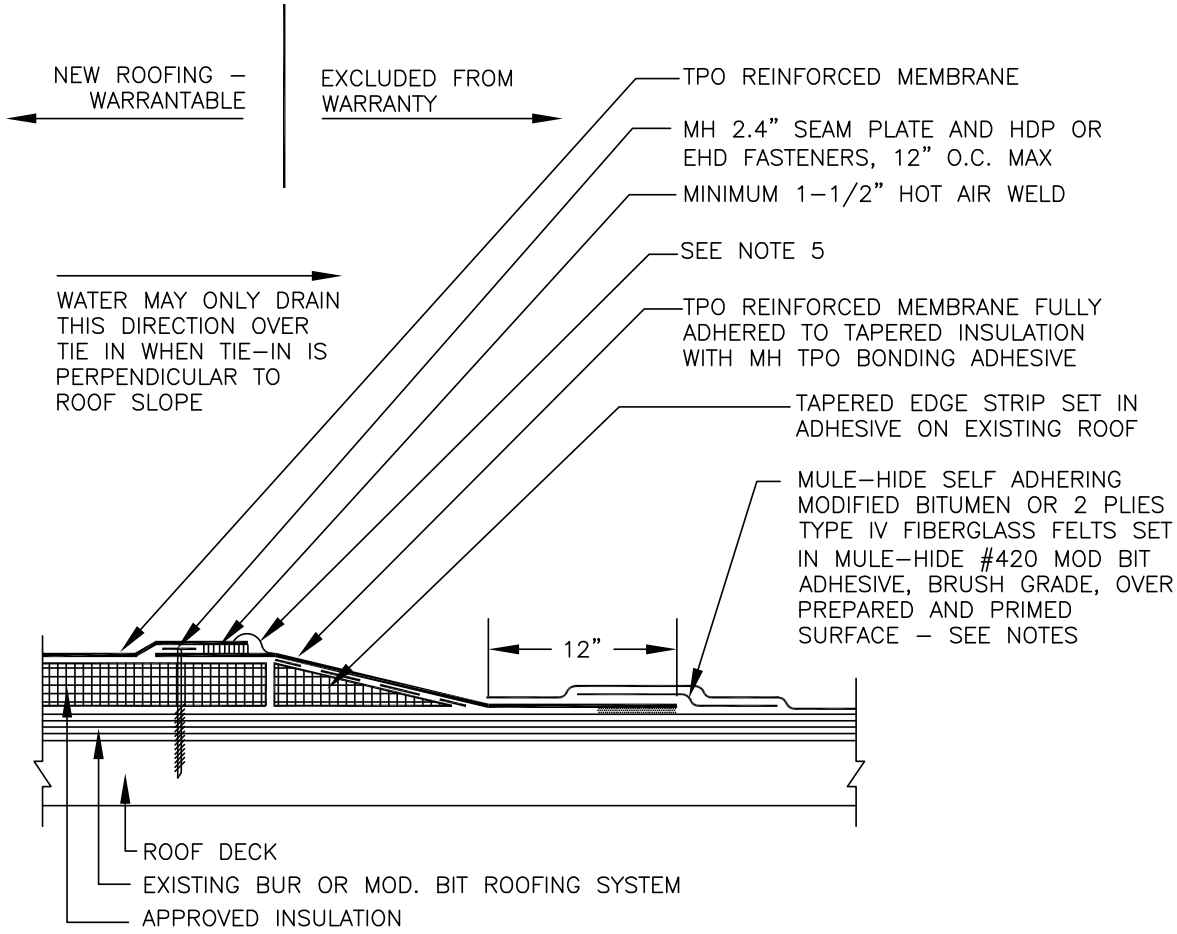

MULE-HIDE PRODUCTS CO., INC.	**TIE-IN TO EXISTING BUR / MOD BIT ROOF RECOVER SITUATION** **SYSTEMS:** **ALL TPO SYSTEMS**	**DETAIL NO.:** **MHT-UN-610A** REVISION DATE: 10/2013

®

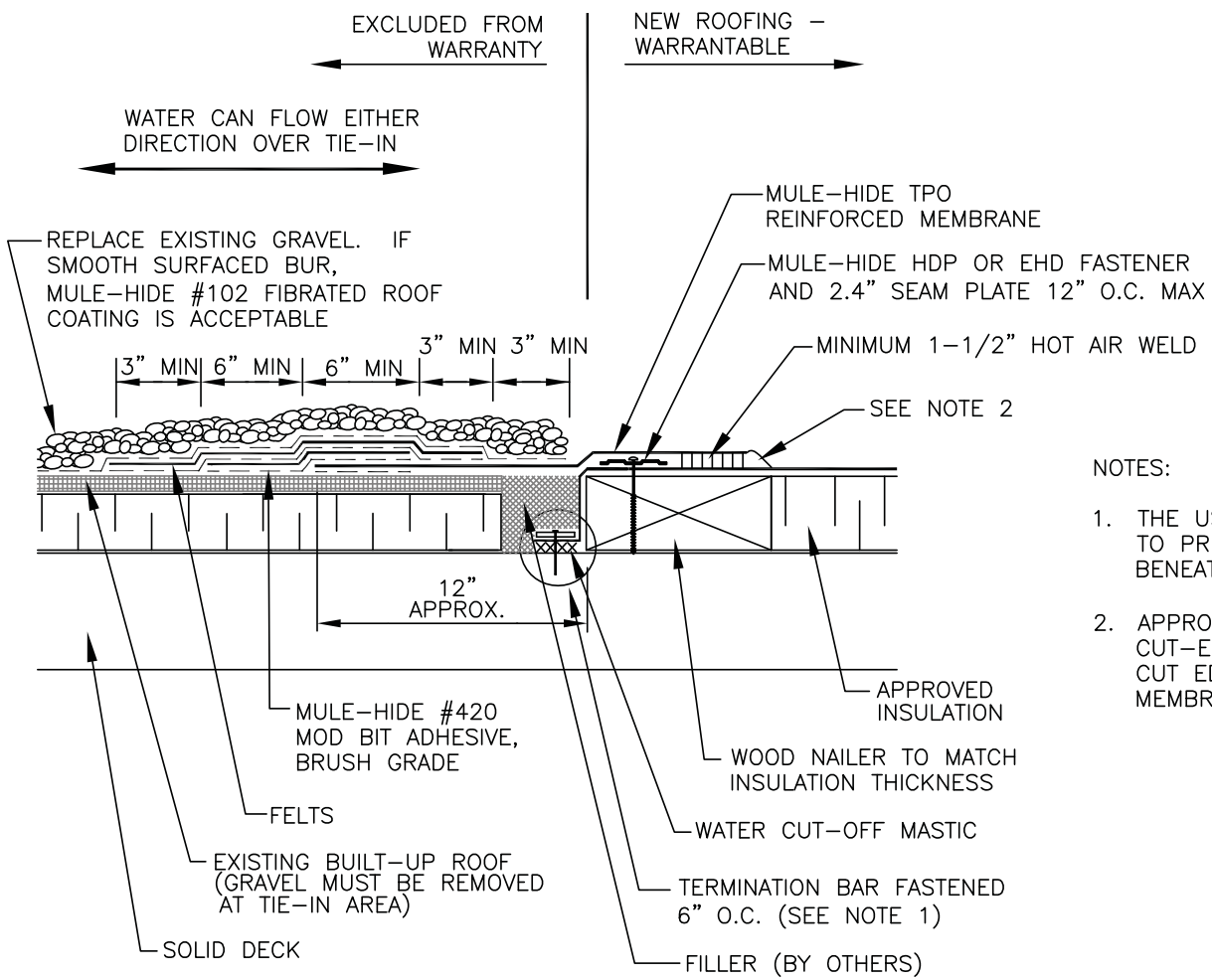

NOTES:

1. THE USE OF THE TERMINATION BAR IS TO PREVENT MIGRATION OF WATER BENEATH THE TPO ROOFING SYSTEM.
2. APPROXIMATELY 1/8" DIAMETER BEAD OF CUT–EDGE SEALANT IS REQUIRED ON CUT EDGES OF TPO REINFORCED MEMBRANE.

MULE-HIDE PRODUCTS CO., INC.	**TIE-IN EXISTING BUR OR MOD. BIT.**	**DETAIL NO.:**
	SYSTEMS:	**MHT-UN-610B**
	ALL TPO SYSTEMS	REVISION DATE: 10/2013

®

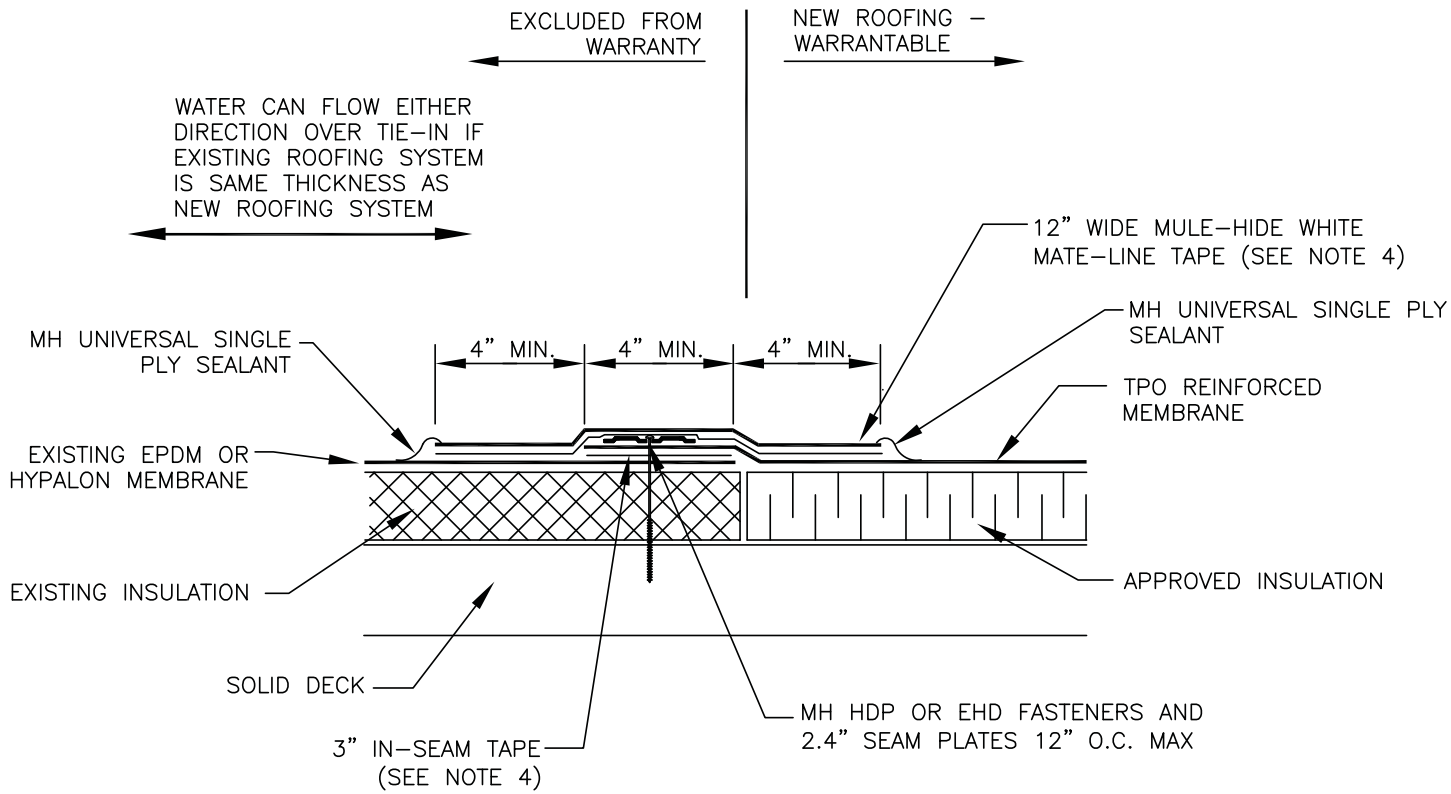

NOTES:

1. REFER TO SPECIFICATION FOR ACCEPTABLE MULE–HIDE FASTENERS AND PLATES.
2. REFER TO MULE–HIDE'S EPDM SPECIFICATIONS FOR SURFACE PREPARATION PROCEDURES FOR EXISTING MEMBRANE.
3. PRIOR TO SEAMING APPLICATION, USE WEATHERED MEMBRANE CLEANER TO PREPARE SURFACES OF TPO AND CLEANED EPDM OR HYPALON MEMBRANES.
4. MULE–HIDE TAPE PRIMER MUST BE USED TO PREPARE MEMBRANE SURFACES PRIOR TO APPLYING MULE–HIDE WHITE MATE–LINE TAPE, IN–SEAM TAPE, AND UNIVERSAL SINGLE PLY SEALANT.

MULE-HIDE PRODUCTS CO., INC.	**TIE-IN TO EXISTING EPDM OR HYPALON TEAR-OFF SITUATION**	**DETAIL NO.:**
	SYSTEMS:	**MHT-UN-610C**
	ALL TPO SYSTEMS	REVISION DATE: 10/2013

®

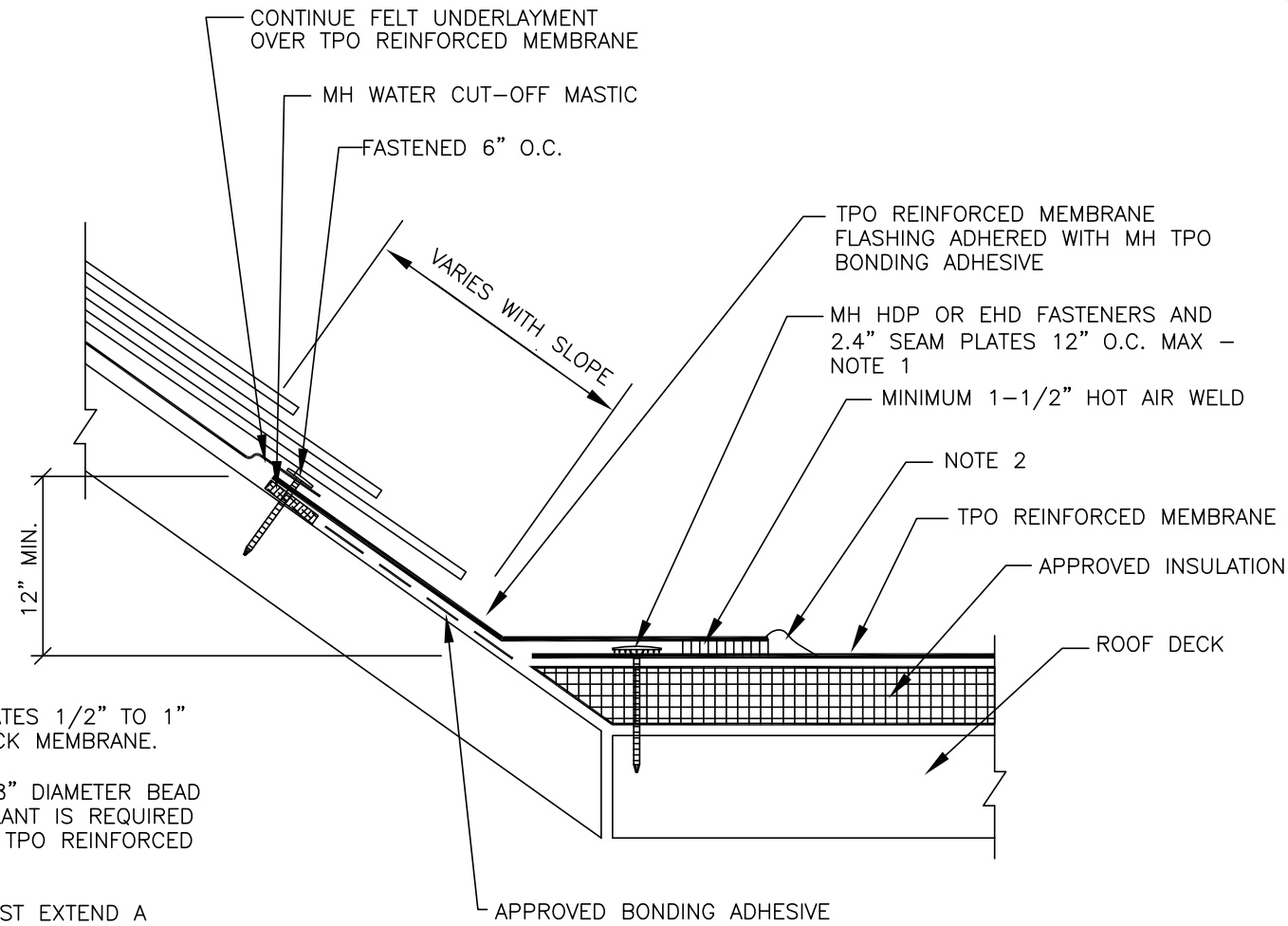

NOTES:

1. POSITION SEAM PLATES 1/2" TO 1" FROM EDGE OF DECK MEMBRANE.
2. APPROXIMATELY 1/8" DIAMETER BEAD OF CUT–EDGE SEALANT IS REQUIRED ON CUT EDGES OF TPO REINFORCED MEMBRANE.
3. TPO MEMBRANE MUST EXTEND A MINIMUM OF 12" VERTICALLY UP THE SLOPE AND UNDER A MINIMUM OF 3 COURSES OF SHINGLES.

MULE-HIDE PRODUCTS CO., INC.	**TIE-IN SHINGLE ROOF**	**DETAIL NO.:**
	SYSTEMS:	**MHT-UN-611A**
	ALL TPO SYSTEMS	REVISION DATE: 10/2013

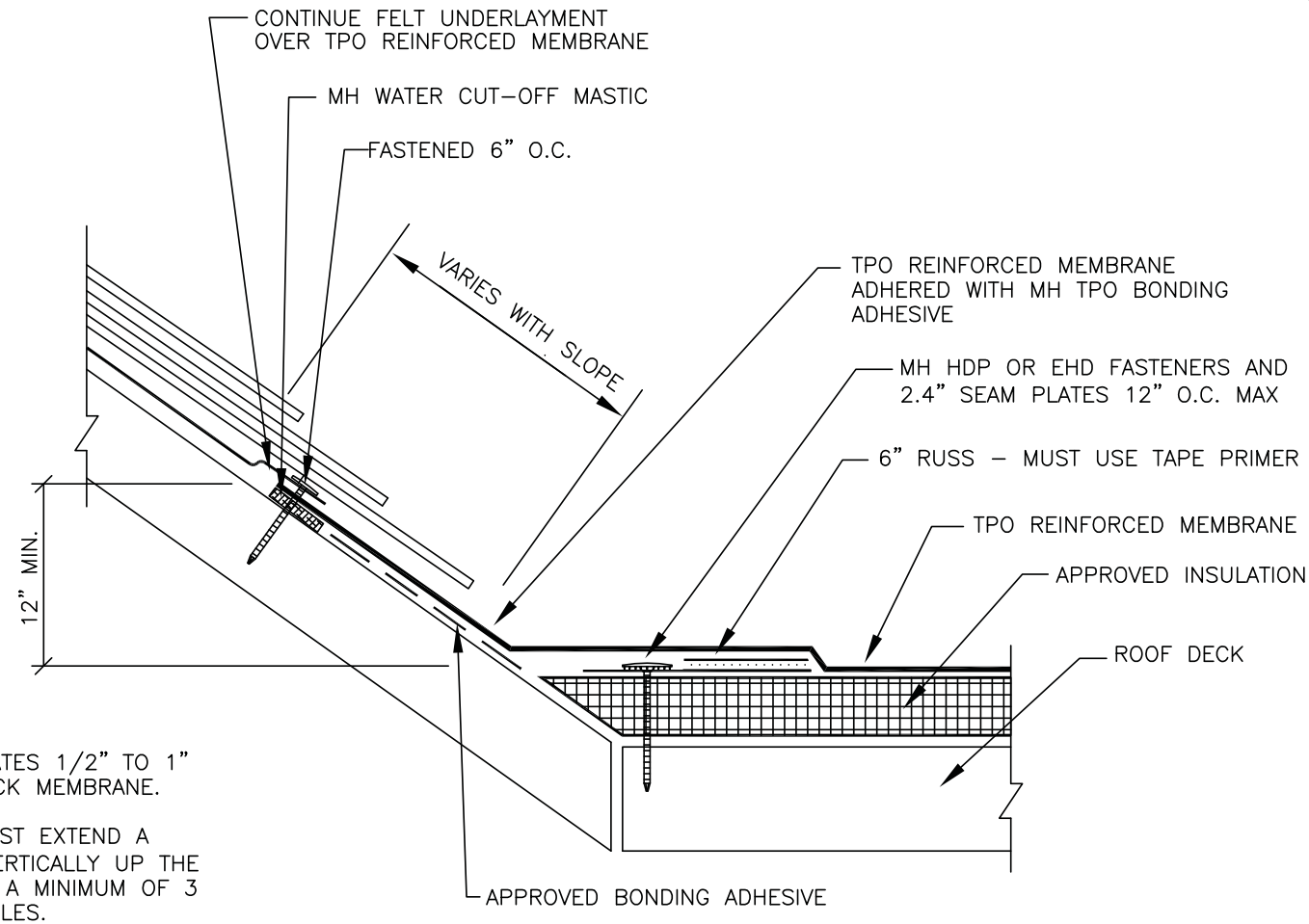

NOTES:

1. POSITION SEAM PLATES 1/2" TO 1" FROM EDGE OF DECK MEMBRANE.
2. TPO MEMBRANE MUST EXTEND A MINIMUM OF 12" VERTICALLY UP THE SLOPE AND UNDER A MINIMUM OF 3 COURSES OF SHINGLES.
3. RUSS PRODUCTS CANNOT BE USED ON FLEECEBACK OR SELF ADHERING MEMBRANES.

MULE-HIDE PRODUCTS CO., INC.	**TIE-IN SHINGLE ROOF 6" RUSS**	**DETAIL NO.:**
	SYSTEMS:	**MHT-UN-611B**
	ALL TPO SYSTEMS	REVISION DATE: 10/2013

®

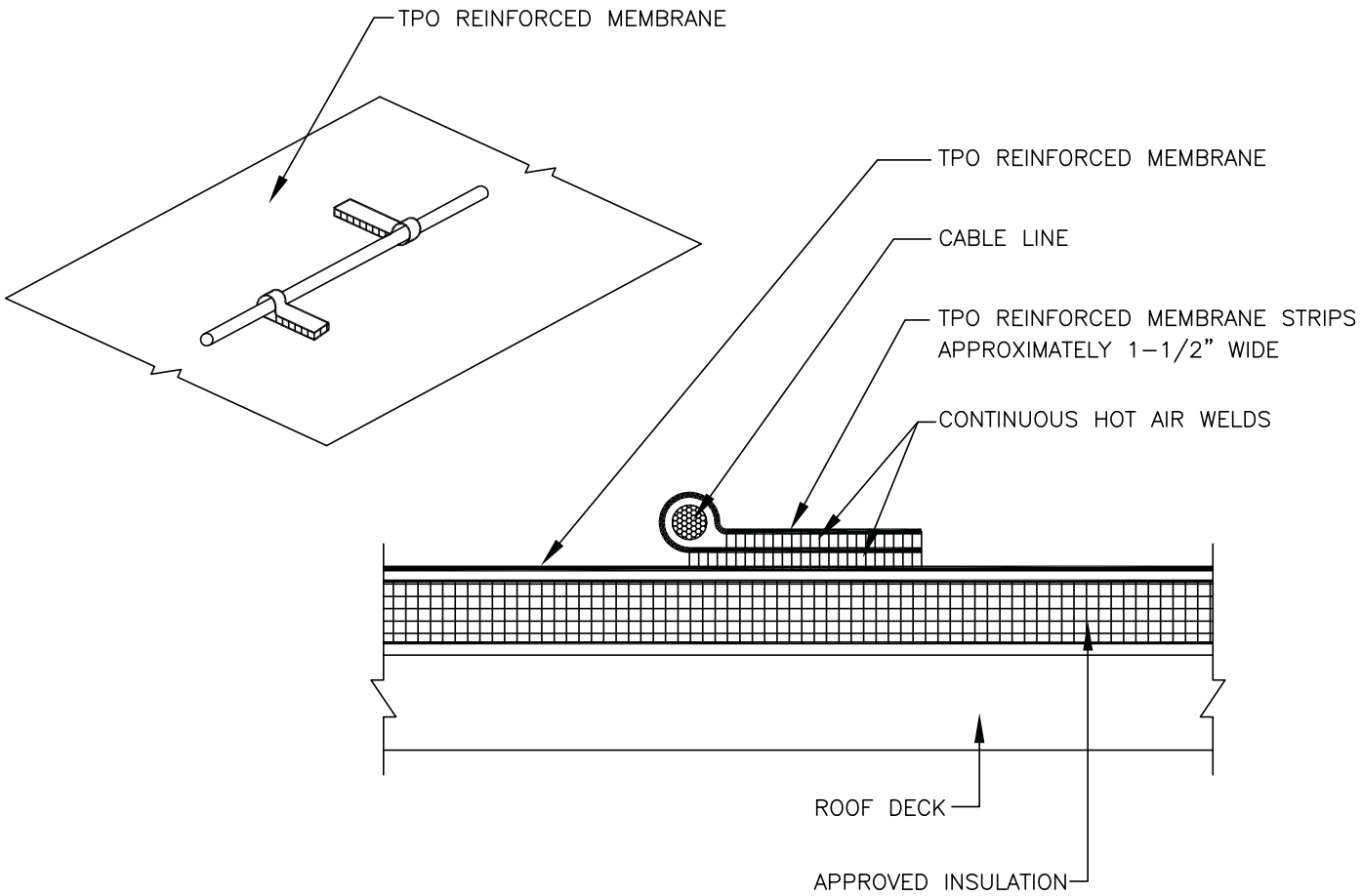

MULE-HIDE PRODUCTS CO., INC.	**LIGHTNING CABLE STRAP**	**DETAIL NO.:**
	SYSTEMS:	**MHT-UN-621**
	ALL TPO SYSTEMS	REVISION DATE: 10/2013

®

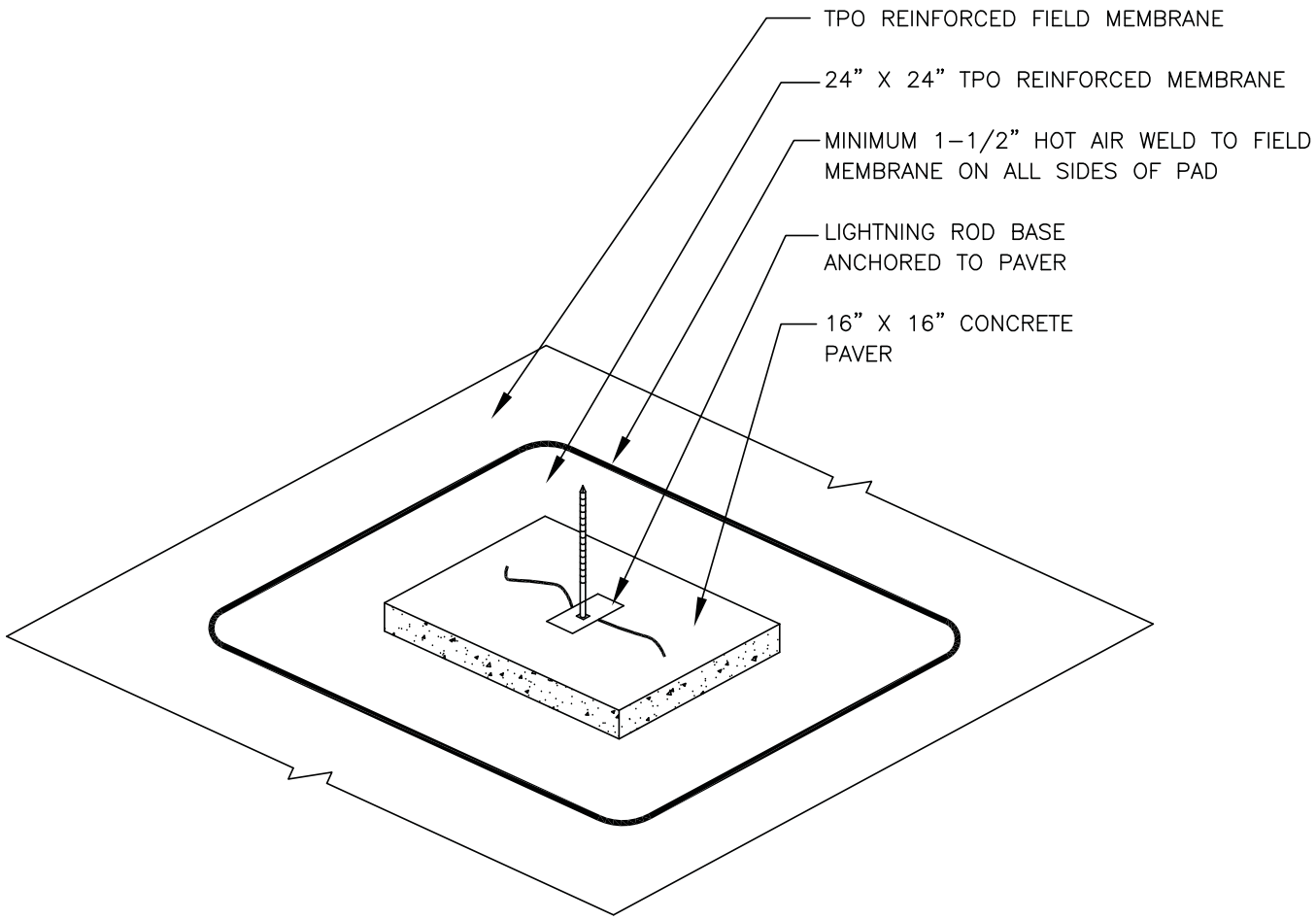

MULE-HIDE PRODUCTS CO., INC.	**LIGHTNING ROD BASE**	**DETAIL NO.:**
	SYSTEMS:	**MHT-UN-622A**
	ALL TPO SYSTEMS	REVISION DATE: 10/2013

®

NOTES:

1. CLEAN EXPOSED MEMBRANE WITH WEATHERED MEMBRANE CLEANER.

2. APPLY MULE–HIDE TAPE PRIMER TO THE MEMBRANE AND LIGHTNING ROD BASE. ALLOW TO DRY UNTIL IT IS TACK FREE.

3. INSTALL A SECTION OF WHITE IN–SEAM TAPE (APPROXIMATELY THE SIZE OF THE METAL BASE) TO THE MEMBRANE SURFACE. LEAVE THE RELEASE FILM IN PLACE AND ROLL TAPE FROM THE CENTER TO THE OUTER EDGES.

4. REMOVE RELEASE FILM AND CAREFULLY PLACE METAL BASE OVER THE IN–SEAM TAPE.

5. APPLY TAPE PRIMER TO TPO MEMBRANE WHERE UNIVERSIAL SINGLE PLY SEALANT IS TO BE APPLIED. ALLOW TO DRY UNTIL TACK FREE, SEAL ALL EDGES AND ANY EXPOSED AREAS OF TAPE (AT PERFORATED BASE) WITH MULE–HIDE UNIVERSAL SINGLE PLY SEALANT.

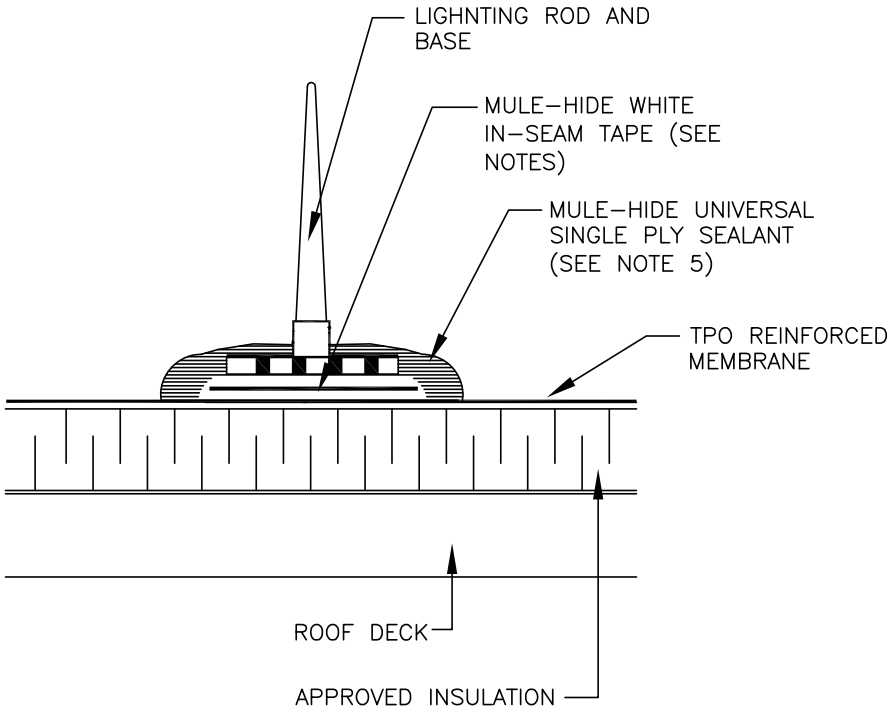

MULE-HIDE PRODUCTS CO., INC.	**LIGHTNING ROD DETAIL**	**DETAIL NO.:**
	SYSTEMS:	**MHT-UN-622B**
	ALL TPO SYSTEMS	REVISION DATE: 10/2013

®

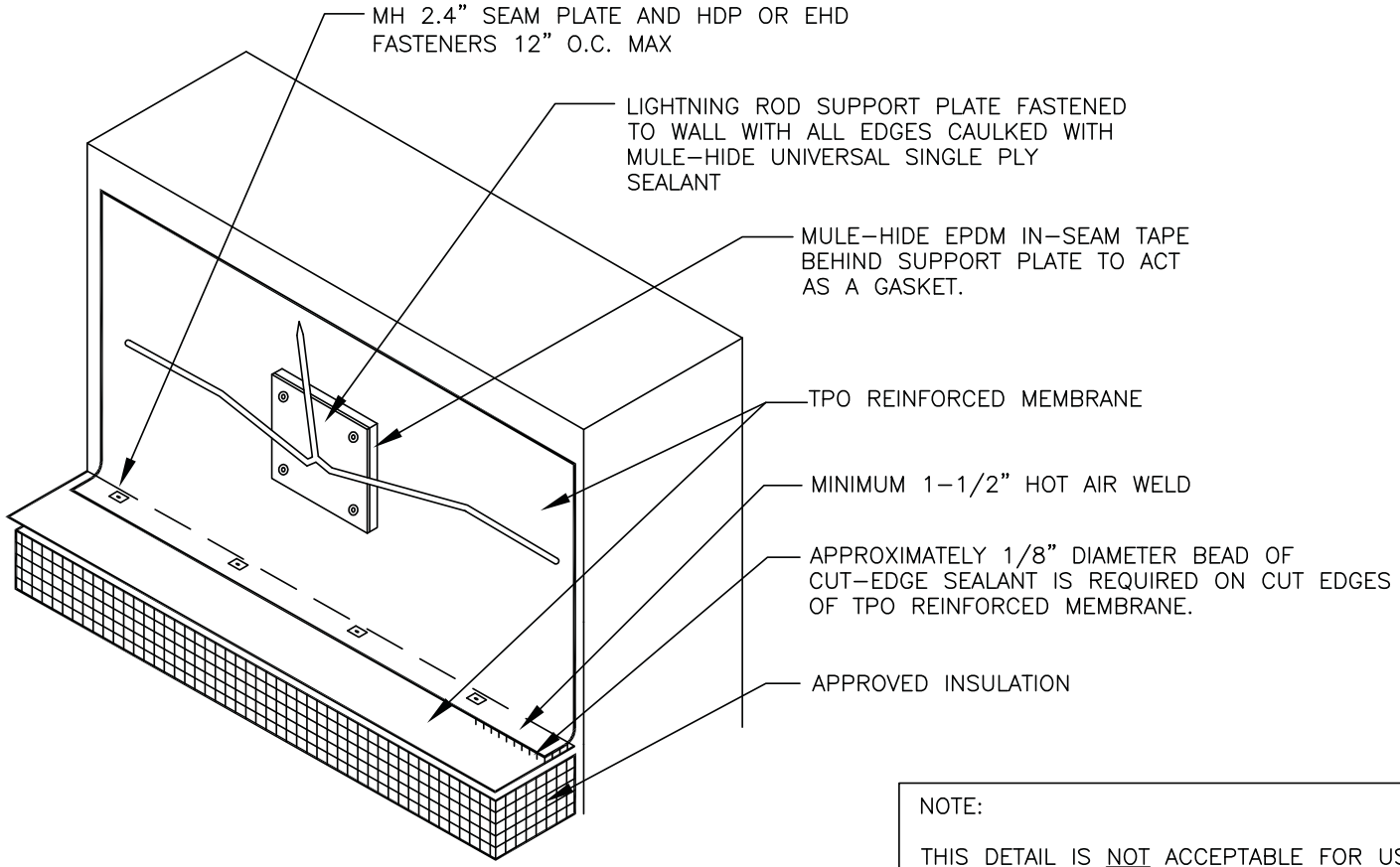

NOTE:

THIS DETAIL IS NOT ACCEPTABLE FOR USE IN A 20-YEAR WARRANTED SYSTEM

MULE-HIDE PRODUCTS CO., INC.	**LIGHTNING ROD WALL SUPPORT**	**DETAIL NO.:**
	SYSTEMS:	**MHT-UN-623**
	ALL TPO SYSTEMS	REVISION DATE: 10/2013

®

NOT FOR USE ON 20 YEAR WARRANTY PROJECTS.
TERMINATION MUST HAVE COMPRESSION SEAL
SEE ALL OTHER 624 DETAILS

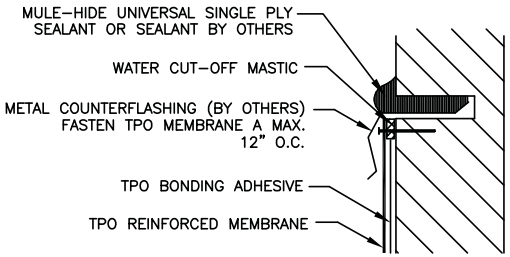

NOTES:

1. COUNTERFLASHING SHALL BE ELEVATED ABOVE PONDED WATER.
2. NOT FOR USE ON 20 YEAR WARRANTY PROJECTS (REFER TO DETAIL 624–B).
3. BONDING ADHESIVE IS NOT REQUIRED WHEN FLASHING HEIGHT IS 12" OR LESS. FASTENERS MUST BE SPACED A MAXIMUM 12" O.C.
4. IF THE SHEETMETAL IS TO BE INCLUDED IN THE WARRANTY, CONTRACTOR MUST USE MULE–HIDE METAL PRODUCTS. REFER TO DETAILS MHSM–6130, MHSM–6145, OR MHSM–6146.

624–A COUNTERFLASHING TERMINATION

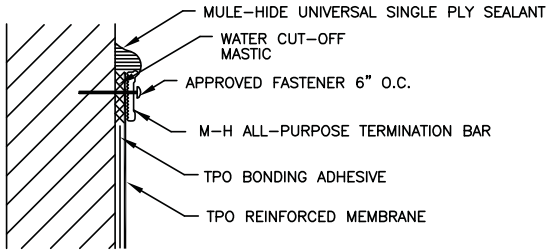

1. FOR USE ON 20 YEAR WARRANTY PROJECTS.
2. ALLOW 1/4" to 1/2" SPACING BETWEEN CONSECUTIVE LENGTHS OF TERMINATION BAR.
3. BONDING ADHESIVE IS NOT REQUIRED WHEN FLASHING IS 18" OR LESS.

624–C MECHANICAL TERMINATION

FOR USE ON 20 YEAR WARRANTY PROJECTS.
TERMINATION BAR IS NOT REQUIRED ON 10 YEAR WARRANTY PROJECTS (REFER TO DETAIL 624–A)

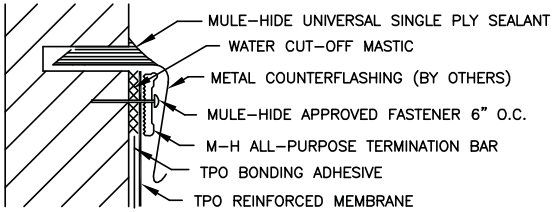

1. APPLY ON HARD SMOOTH SURFACE ONLY; NOT FOR USE ON WOOD.
2. DO NOT WRAP COMPRESSION TERMINATION AROUND CORNERS.
3. FASTENERS OF METAL BAR MUST PROVIDE CONSTANT COMPRESSION ON WATER CUT–OFF MASTIC.
4. BONDING ADHESIVE IS NOT REQUIRED WHEN FLASHING IS 18" OR LESS.
5. IF THE SHEETMETAL IS TO BE INCLUDED IN THE WARRANTY, CONTRACTOR MUST USE MULE–HIDE METAL PRODUCTS. REFER TO DETAILS MHSM–6130, MHSM–6145, OR MHSM–6146.

624–B MECHANICAL TERMINATION

FOR USE ON 20 YEAR WARRANTY PROJECTS.

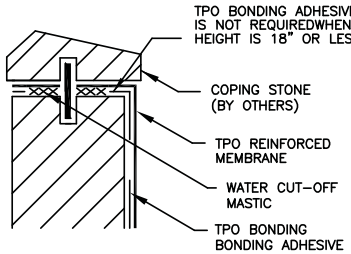

624–D COPING STONE TERMINATION

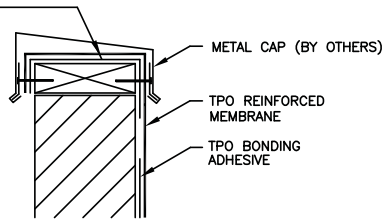

624–E CAP FLASHING TERMINATION

NOTES:

IF THE SHEETMETAL IS TO BE INCLUDED IN THE WARRANTY, CONTRACTOR MUST USE MULE–HIDE METAL PRODUCTS. REFER TO DETAILS MHSM–6050, MHSM–6052, MHSM–6054A & B, OR MHSM–6056.

MULE-HIDE PRODUCTS CO., INC.

TERMINATION DETAILS

SYSTEMS:

ALL TPO SYSTEMS

DETAIL NO.:

MHT-UN-624

REVISION DATE: 10/2013

®

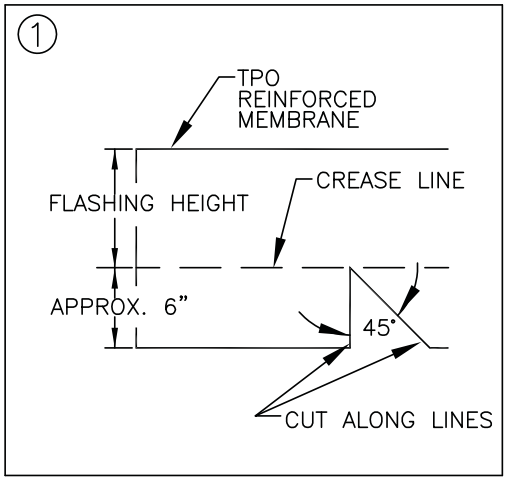

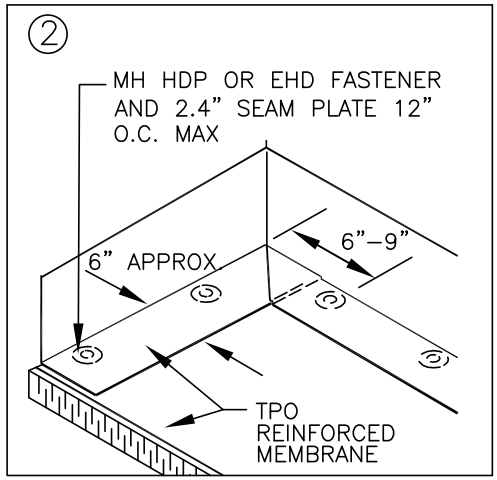

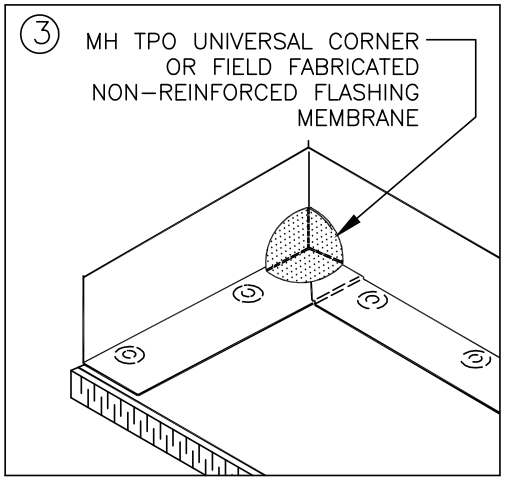

NOTES:

1. BEGIN INSTALLATION OF 2.4" SEAM PLATES 6" TO 9" FROM THE CORNER.
2. POSITION 2.4" SEAM PLATES ½" TO 1" FROM EDGE OF TPO REINFORCED MEMBRANE.
3. APPROXIMATELY ⅛" DIAMETER BEAD OF CUT–EDGE SEALANT IS REQUIRED ON CUT EDGES OF TPO REINFORCED MEMBRANE.

MULE-HIDE PRODUCTS CO., INC.	**INSIDE CORNER**	**DETAIL NO.:**
	SYSTEMS:	**MHT-UN-640A**
	ALL TPO SYSTEMS	REVISION DATE: 10/2013

®

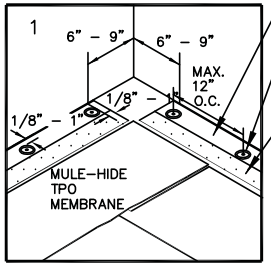

6" WIDE PRESSURE–SENSITIVE TPO RUSS STRIP

M–H 2.4" SEAM PLATE AND HDP OR EHD FASTENER MAX. 12" O.C.

PRE–APPLIED PRESSURE–SENSITIVE TAPE(RUSS STRIP)

INSTALL PRESSURE–SENSITIVE RUSS AND FASTEN TO ROOF DECK WITH APPROVED MULE–HIDE FASTENERS AND SEAM PLATES, MAX. 12" O.C.

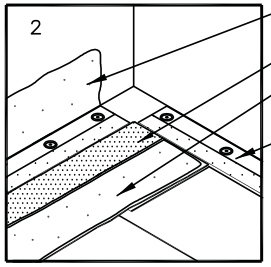

TPO BONDING ADHESIVE

TAPE PRIMER

TPO BONDING ADHESIVE

6" WIDE PRESSURE–SENSITIVE TPO RUSS STRIP

FOR RUSS SECUREMENT, USE HDP OR EHD FASTENERS & SEAM PLATES SPACED A MAXIMUM OF 12"O.C.

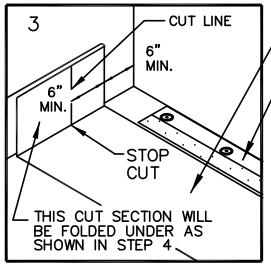

TPO REINFORCED MEMBRANE

6" WIDE PRESSURE–SENSITIVE TPO RUSS STRIP

THE CUT SECTION OF VERTICAL MEMBRANE WILL BE FOLDED UNDER THE FIELD MEMBRANE AS SHOWN IN STEP 4.

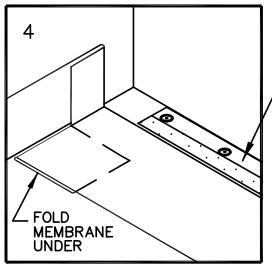

6" WIDE PRESSURE–SENSITIVE TPO RUSS STRIP

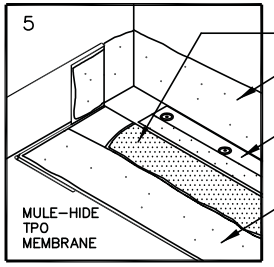

TAPE PRIMER

TPO BONDING ADHESIVE

6" WIDE PRESSURE–SENSITIVE TPO RUSS STRIP

TPO BONDING ADHESIVE

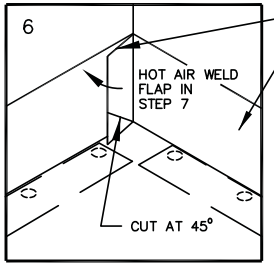

1–1/2" WIDE MIN.

TPO REINFORCED MEMBRANE

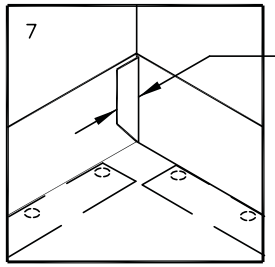

MINIMUM 1–1/2" HOT AIR WELD

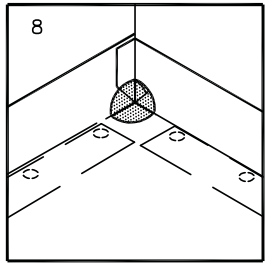

APPLY INSIDE CORNER FLASHING IN ACCORDANCE WITH MULE–HIDE DETAIL MHT–UN–640A OR MHT–UN–640C

APPLY CUT–EDGE SEALANT TO CUT EDGES OF TPO REINFORCED MEMBRANE.

NOTE:

RUSS PRODUCTS CANNOT BE USED WITH FLEECEBACK OR SELF ADHERING MEMBRANES.

MULE-HIDE PRODUCTS CO., INC.	**INSIDE CORNER USING RUSS**	**DETAIL NO.:**
	SYSTEMS:	**MHT-UN-640B**
	ALL TPO SYSTEMS	REVISION DATE: 10/2013

®

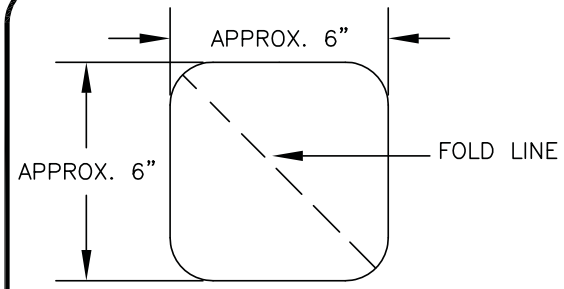

CUT A SECTION OF TPO NON–REINFORCED FLASHING WITH ROUNDED CORNERS OR USE UNIVERSAL CORNER; FOLD ALONG LINE AS INDICATED.

1

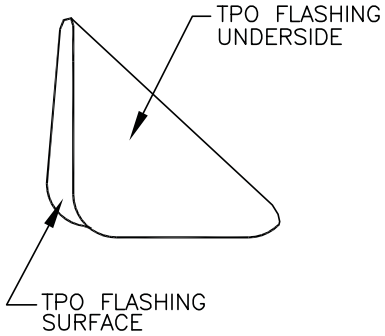

2

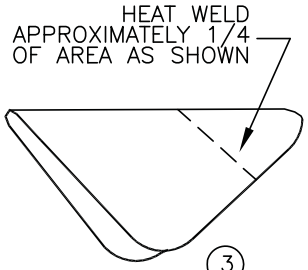

3

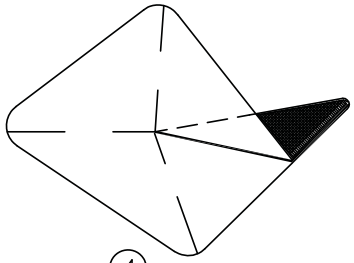

4

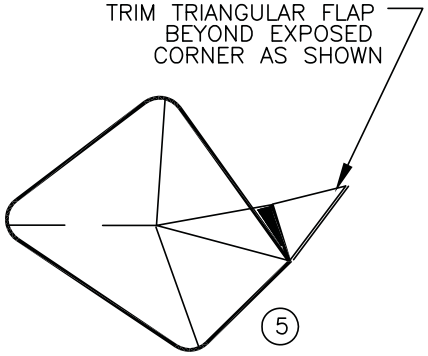

5

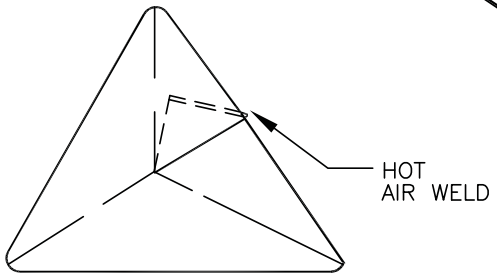

6 POSITION AND HEAT WELD CORNER IN PLACE AS SHOWN

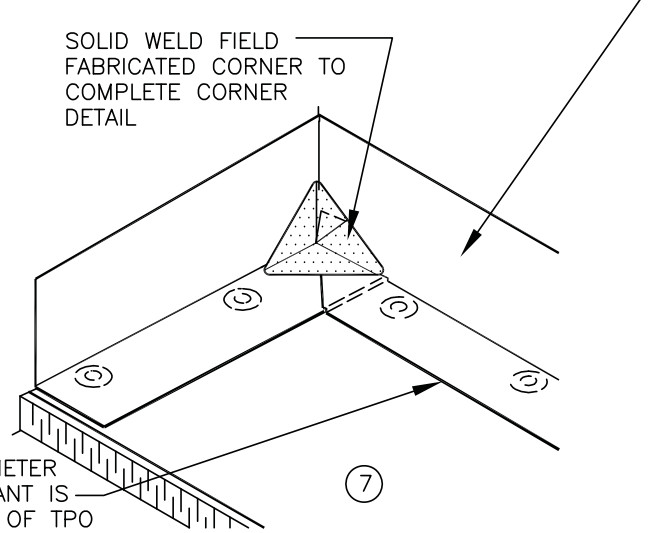

7

MULE-HIDE PRODUCTS CO., INC.	**FIELD FABRICATED INSIDE CORNER**	**DETAIL NO.:**
	SYSTEMS:	**MHT-UN-640C**
	ALL TPO SYSTEMS	REVISION DATE: 10/2013

®

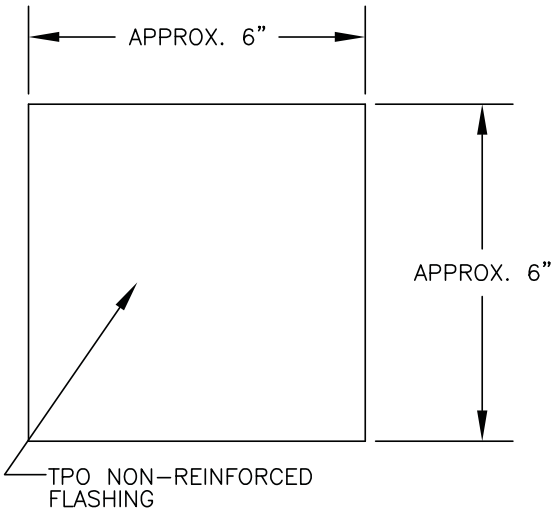

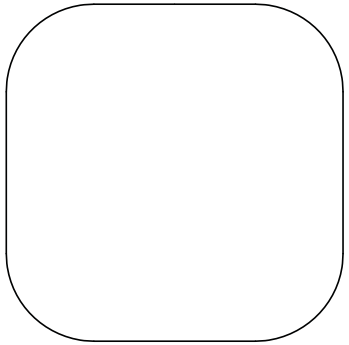

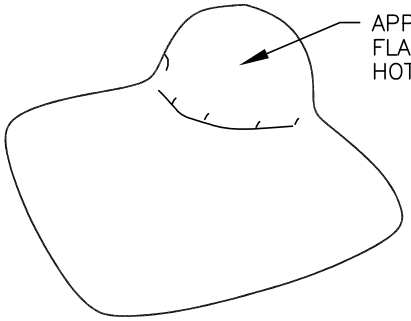

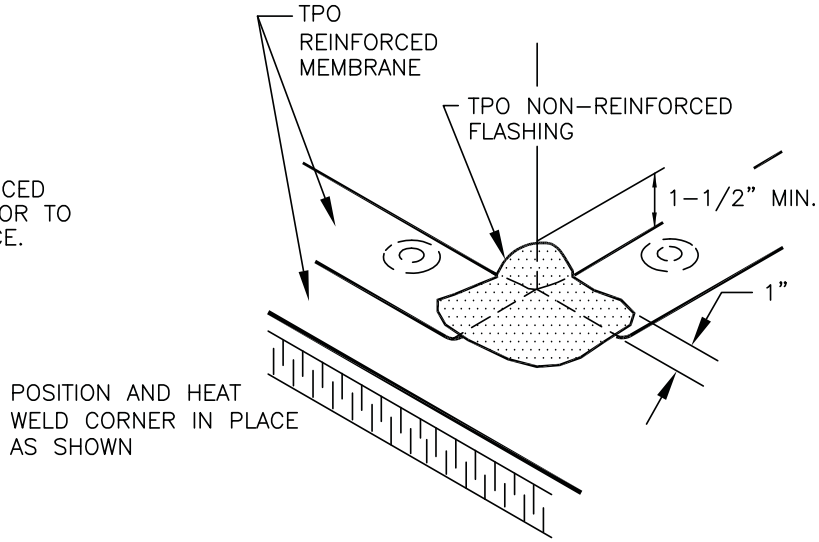

MULE-HIDE PRODUCTS CO., INC.	**FIELD FABRICATED OUTSIDE CORNER**	**DETAIL NO.:**
	SYSTEMS:	**MHT-UN-641A**
	ALL TPO SYSTEMS	REVISION DATE: 10/2013

®

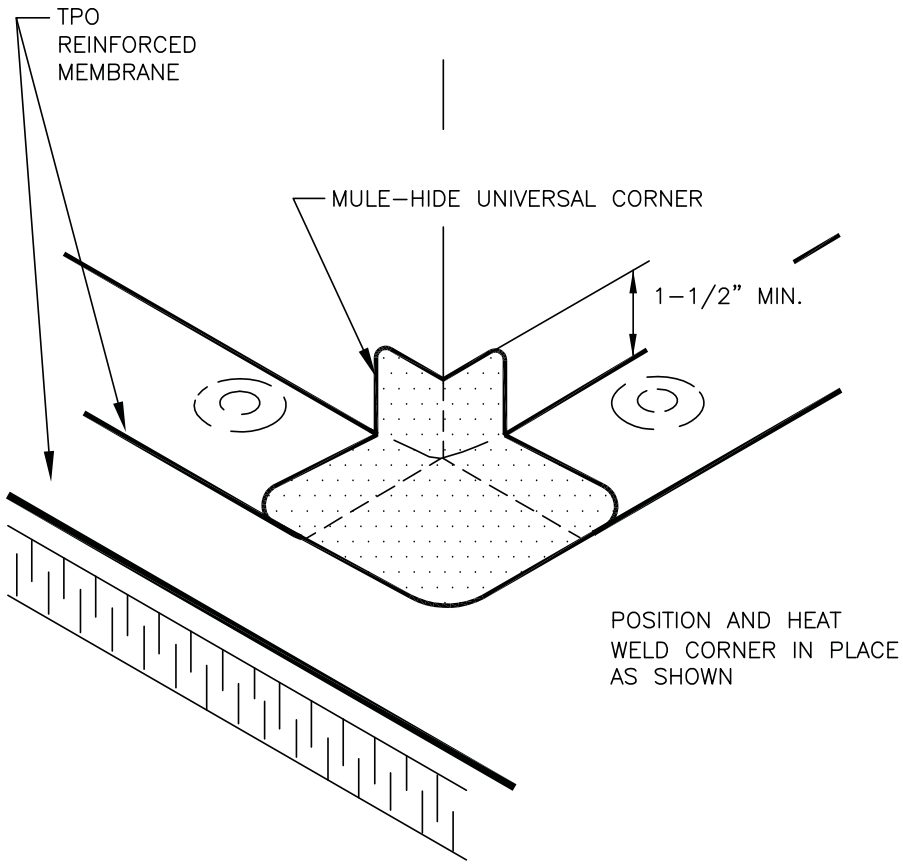

MULE-HIDE PRODUCTS CO., INC.	**TPO UNIVERSAL CORNER OUTSIDE CORNER**	**DETAIL NO.:**
	SYSTEMS:	**MHT-UN-641B**
	ALL TPO SYSTEMS	REVISION DATE: 10/2013

®

FASTENING PATTERNS FOR EXTRUDED POLYSTYRENE INSULATION FOR USE DIRECTLY UNDER MECHANICALLY ATTACHED WHITE TPO REINFORCED MEMBRANE ONLY

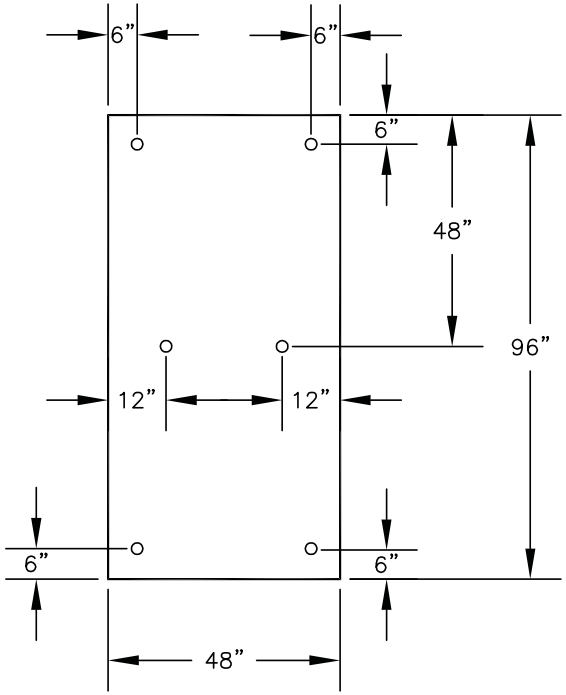

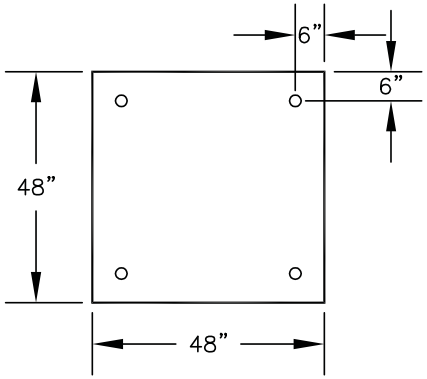

NOTES:

1. MULE–HIDE 3” METAL STRESS PLATES MUST BE USED WITH MULE–HIDE FASTENERS FOR INSULATION ATTACHMENT.

2. FASTENER TOLERANCE SHALL BE ±1 INCH.

MULE-HIDE PRODUCTS CO., INC.	**EXTRUDED POLYSTYRENE INSULATION ATTACHMENT FASTENING PATTERNS** **SYSTEMS:** **MECHANICALLY ATTACHED**	**DETAIL NO.:** **MHT-MA-700** REVISION DATE: 10/2013

®

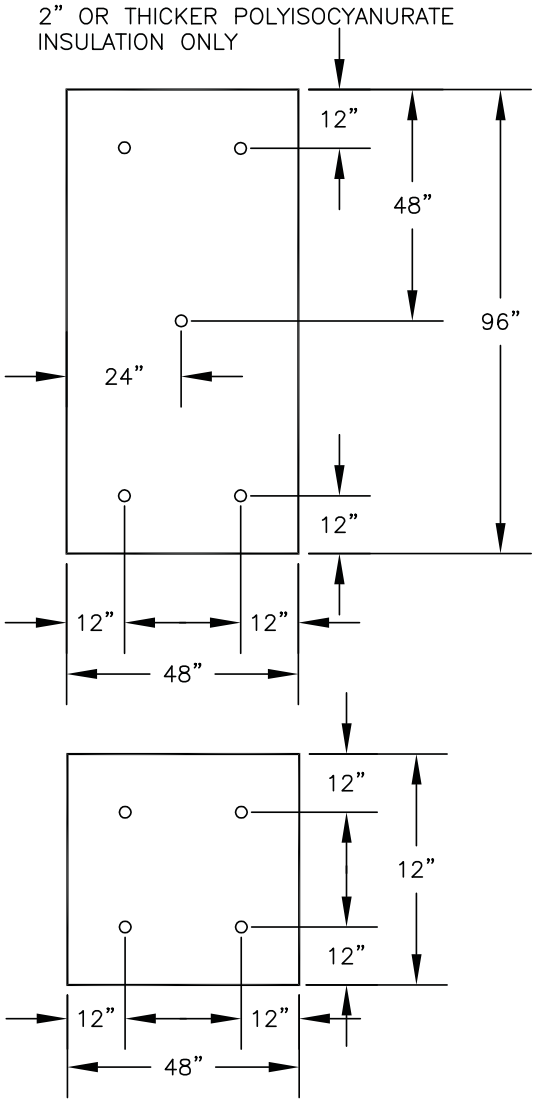

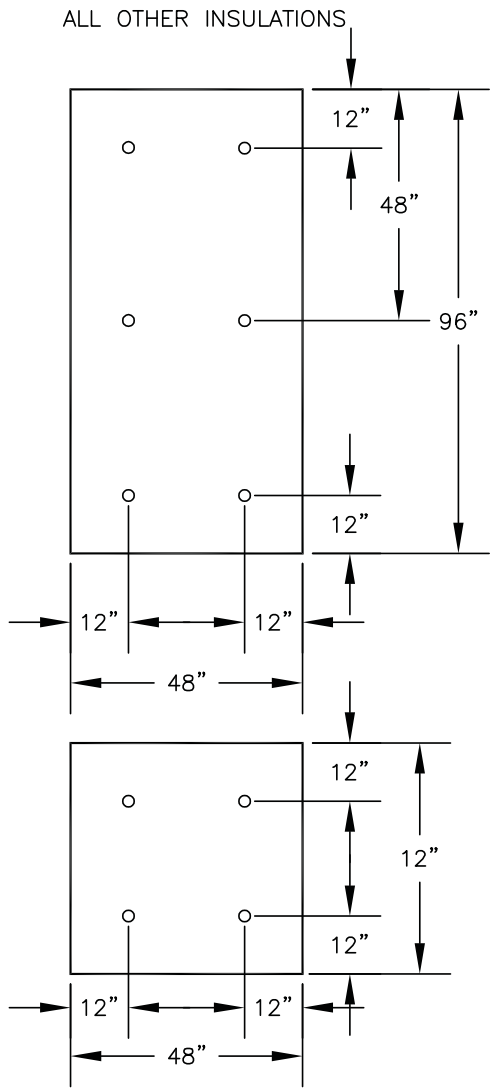

NOTES:

1. MULE–HIDE 3" METAL STRESS PLATES MUST BE USED WITH MULE–HIDE FASTENERS FOR INSULATION ATTACHMENT.
2. FASTENER TOLERANCE SHALL BE +1 INCH.

MULE-HIDE PRODUCTS CO., INC.	**INSULATION ATTACHMENT PATTERNS**	**DETAIL NO.:**
	SYSTEMS:	**MHT-MA-701**
	MECHANICALLY ATTACHED	REVISION DATE: 10/2013

®

NOTES:

1. 8 FASTENERS PER 4' X 8' BOARDS (1 FASTENER EVERY 4 SQUARE FEET) IN THE FIELD IS APPROVED FOR INSULATIONS 2" OR MORE THICK WHEN USED AS THE TOP LAYER.

2. PERIMETER AND CORNER DIMENSIONS ARE TO BE A MINIMUM OF 8' WIDE UNLESS THE PROJECT REQUIRES FACTORY MUTUAL COMPLIANCE. CONTACT MULE-HIDE TECHNICAL DEPARTMENT FOR FACTORY MUTUAL REQUIREMENTS.

3. MULE-HIDE FASTENERS AND 3" STRESS PLATES MUST BE USED FOR INSULATION ATTACHMENT.

4. REFER TO MULE-HIDE WIND UPLIFT RATINGS FOR APPROPRIATE FASTENER DENSITY REQUIRED.

5. FASTENER DENSITY INCREASES BASED ON THE FOLLOWING:
   - 50% FOR PERIMETERS
   - 100% FOR CORNERS

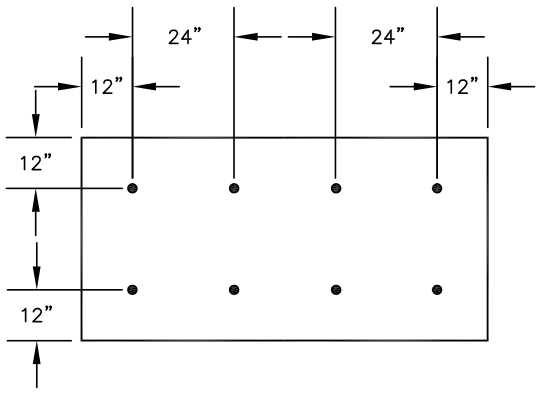

FIELD (8)
1 FASTENER PER EVERY 4 SQ. FT.

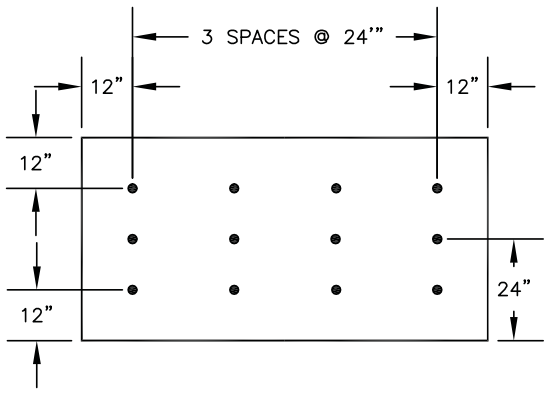

PERIMETER (12)
1 FASTENER PER EVERY 2.66 SQ. FT.

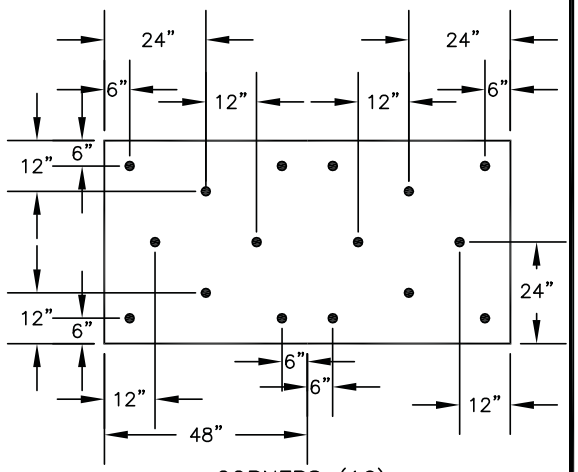

CORNERS (16)
1 FASTENER PER EVERY 2 SQ. FT.

MULE-HIDE PRODUCTS CO., INC.	**2" OR THICKER INSULATION ATTACHMENT 8 FASTENERS PER 4' X 8' IN FIELD** **SYSTEMS:** **FULLY ADHERED**	**DETAIL NO.:** **MHT-FA-720** REVISION DATE: 10/2013

®

NOTES:

1. 12 FASTENERS PER 4' X 8' BOARD IN THE FIELD IS APPROVED FOR 1–1/2" TO 2" THICK POLYISOCYANURATE INSULATIONS WHEN USED AS THE TOP LAYER OR ¼" DENS DECK INSTALLED AS A COVER BOARD.

2. PERIMETER AND CORNER DIMENSIONS ARE TO BE A MINIMUM OF 8' WIDE UNLESS THE PROJECT REQUIRES FACTORY MUTUAL COMPLIANCE. CONTACT MULE–HIDE TECHNICAL DEPARTMENT FOR FACTORY MUTUAL REQUIREMENTS.

3. MULE–HIDE FASTENERS AND 3" STRESS PLATES MUST BE USED FOR INSULATION ATTACHMENT.

4. REFER TO MULE–HIDE WIND UPLIFT RATINGS FOR APPROPRIATE FASTENER DENSITY REQUIRED.

5. FASTENER DENSITY INCREASES BASED ON THE FOLLOWING:
   - 50% FOR PERIMETERS
   - 100% FOR CORNERS

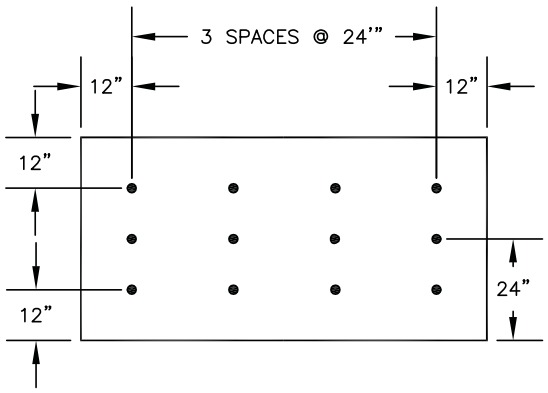

FIELD (12)
1 FASTENER PER EVERY 2.66 SQ. FT.

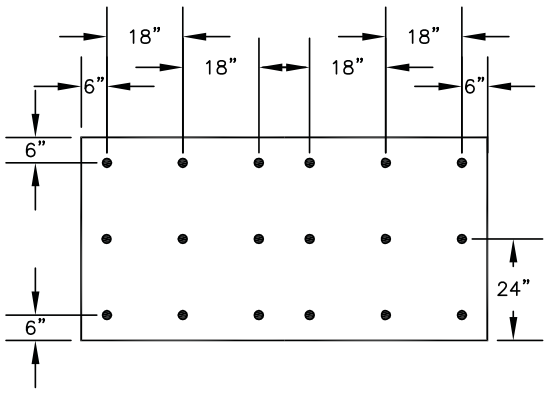

PERIMETER (18)
1 FASTENER PER EVERY 1.77 SQ. FT.

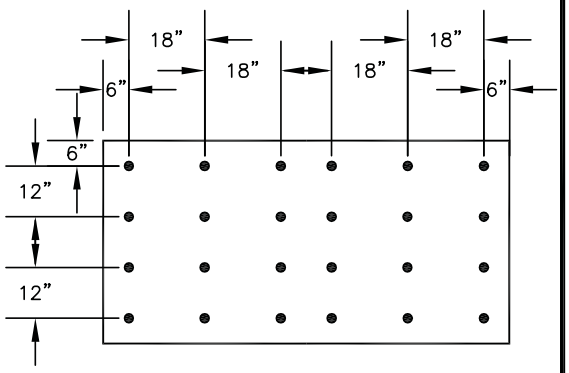

CORNERS (24)
1 FASTENER PER EVERY 1.33 SQ. FT.

MULE-HIDE PRODUCTS CO., INC.	**INSULATION ATTACHMENT** **12 FASTENERS PER 4' X 8' IN FIELD** **SYSTEMS:** **FULLY ADHERED**	**DETAIL NO.:** **MHT-FA-721** REVISION DATE: 10/2013

®

NOTES:

1. 16 FASTENERS PER 4' X 8' BOARD IN THE FIELD IS MULE-HIDE'S STANDARD FOR FULLY ADHERED TPO ROOFING SYSTEMS.

2. PERIMETER AND CORNER DIMENSIONS ARE TO BE A MINIMUM OF 8' WIDE UNLESS THE PROJECT REQUIRES FACTORY MUTUAL COMPLIANCE. CONTACT MULE-HIDE TECHNICAL DEPARTMENT FOR FACTORY MUTUAL REQUIREMENTS.

3. MULE-HIDE FASTENERS AND 3" STRESS PLATES MUST BE USED FOR INSULATION ATTACHMENT.

4. REFER TO MULE-HIDE WIND UPLIFT RATINGS FOR APPROPRIATE FASTENER DENSITY REQUIRED.

5. FASTENER DENSITY INCREASES BASED ON THE FOLLOWING:
   - 50% FOR PERIMETERS
   - 100% FOR CORNERS

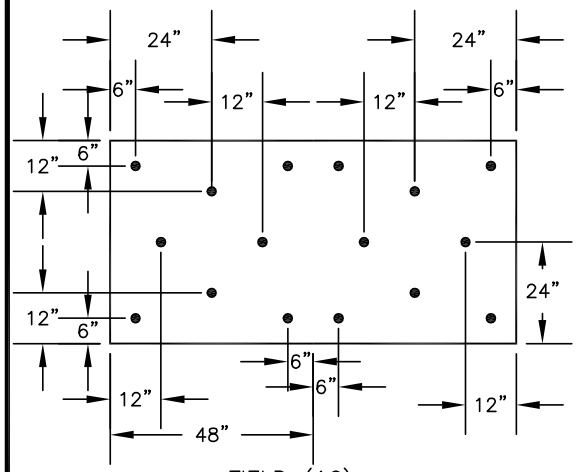

FIELD (16)
1 FASTENER PER EVERY 2 SQ. FT.

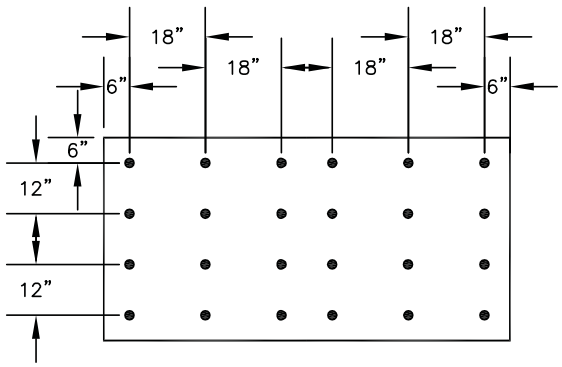

PERIMETER (24)
1 FASTENER PER EVERY 1.33 SQ. FT.

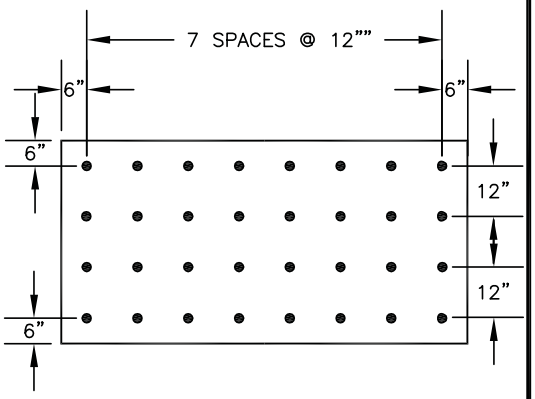

CORNERS (32)
1 FASTENER PER EVERY 1 SQ. FT.

MULE-HIDE PRODUCTS CO., INC.	**INSULATION ATTACHMENT 16 FASTENERS PER 4' X 8' IN FIELD** **SYSTEMS:** **FULLY ADHERED**	**DETAIL NO.:** **MHT-FA-722** REVISION DATE: 10/2013

®

NOTES:

1. 17 FASTENERS PER 4' X 8' BOARD IN THE FIELD IS APPROVED FOR OSB COVER BOARDS OR OSB/POLYISOCYANURATE COMPOSITE INSULATION.

2. PERIMETER AND CORNER DIMENSIONS ARE TO BE A MINIMUM OF 8' WIDE UNLESS THE PROJECT REQUIRES FACTORY MUTUAL COMPLIANCE. CONTACT MULE-HIDE TECHNICAL DEPARTMENT FOR FACTORY MUTUAL REQUIREMENTS.

3. MULE-HIDE FASTENERS AND 3" STRESS PLATES MUST BE USED FOR INSULATION ATTACHMENT.

4. REFER TO MULE-HIDE WIND UPLIFT RATINGS FOR APPROPRIATE FASTENER DENSITY REQUIRED.

5. FASTENER DENSITY INCREASES BASED ON THE FOLLOWING:
   - 50% FOR PERIMETERS
   - 100% FOR CORNERS

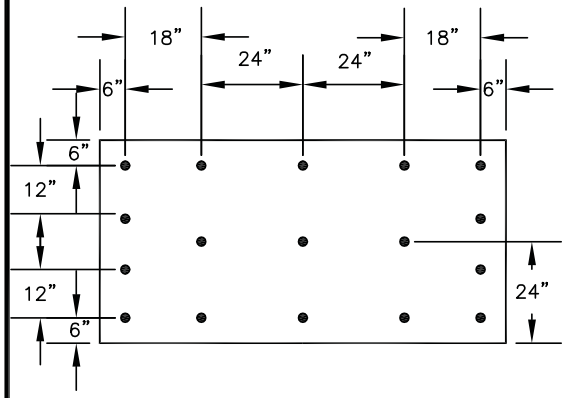

FIELD (17)
1 FASTENER PER EVERY 1.88 SQ. FT.

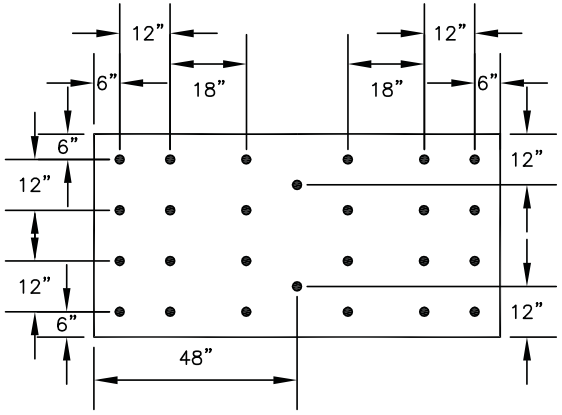

PERIMETER (26)
1 FASTENER PER EVERY 1.23 SQ. FT.

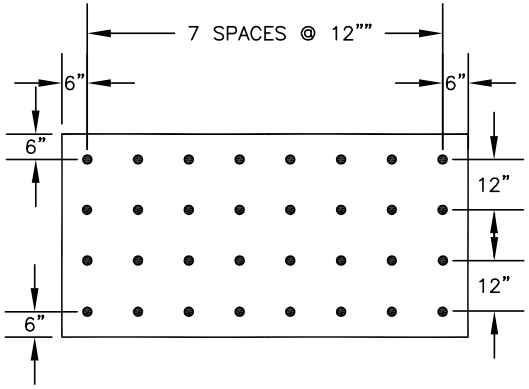

CORNERS (32)
1 FASTENER PER EVERY 1 SQ. FT.

MULE-HIDE PRODUCTS CO., INC.	**INSULATION ATTACHMENT** **17 FASTENERS PER 4' X 8' IN FIELD** **SYSTEMS:** **FULLY ADHERED**	**DETAIL NO.:** **MHT-FA-723** REVISION DATE: 10/2013

®

NOTES:

1. THESE FASTENING PATTERNS ARE TO BE USED WHEN THE PROJECT REQUIRES A FACTORY MUTUAL RATED SYSTEM. CONTACT MULE–HIDE TECHNICAL DEPARTMENT FOR APPROPRIATE USE OF THESE PATTERNS.

2. MULE–HIDE INSULATION FASTENERS AND 3" DIAMETER PLATES MUST BE USED FOR INSULATION ATTACHMENT.

3. REFER TO MULE–HIDE WIND UPLIFT RATINGS FOR APPROPRIATE FASTENER DENSITY REQUIRED.

4. FASTENER DENSITY INCREASES BASED ON THE FOLLOWING:
   - 50% FOR PERIMETERS WITH A MINIMUM OF 1 FASTENER EVERY 2 SQUARE FEET NOT TO EXCEED 1 FASTENER EVERY 1 SQUARE FEET
   - CONSTANT DENSITY OF 1 FASTENER EVERY 1 SQUARE FEET FOR CORNERS.

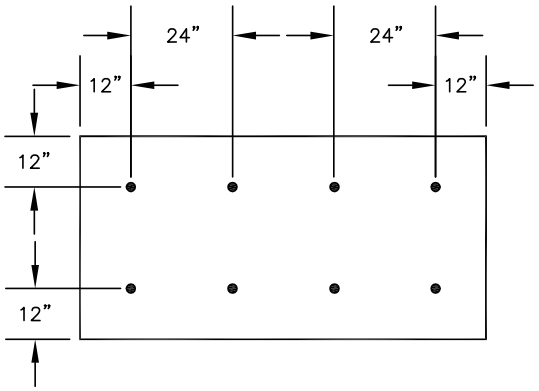

FIELD (8)
1 FASTENER PER EVERY 4 SQ. FT.

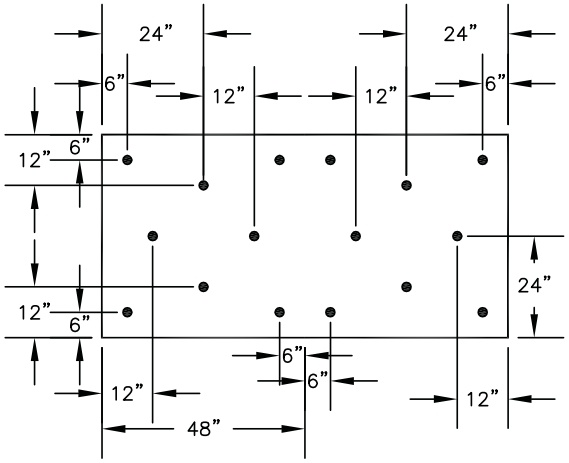

PERIMETER (16)
1 FASTENER PER EVERY 2 SQ. FT.

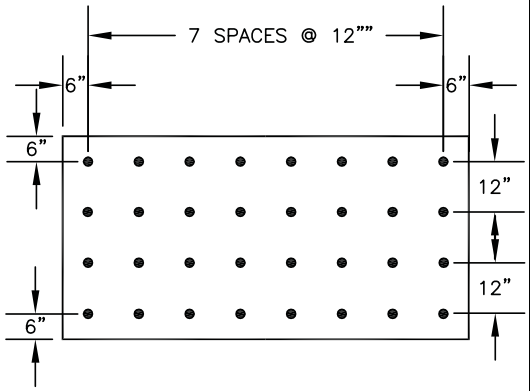

CORNERS (32)
1 FASTENER PER EVERY 1 SQ. FT.

MULE-HIDE PRODUCTS CO., INC.	**FM - 8 FIELD FASTENERS PER 4' X 8' BOARD PATTERN LAYOUT** **SYSTEMS:** **FULLY ADHERED**	**DETAIL NO.:** **MHT-FM-724** REVISION DATE: 10/2013

®

NOTES:

1. THESE FASTENING PATTERNS ARE TO BE USED WHEN THE PROJECT REQUIRES A FACTORY MUTUAL RATED SYSTEM. CONTACT MULE–HIDE TECHNICAL DEPARTMENT FOR APPROPRIATE USE OF THESE PATTERNS.

2. MULE–HIDE INSULATION FASTENERS AND 3" DIAMETER PLATES MUST BE USED FOR INSULATION ATTACHMENT.

3. REFER TO MULE–HIDE WIND UPLIFT RATINGS FOR APPROPRIATE FASTENER DENSITY REQUIRED.

4. FASTENER DENSITY INCREASES BASED ON THE FOLLOWING:
   - 50% FOR PERIMETERS WITH A MINIMUM OF 1 FASTENER EVERY 2 SQUARE FEET NOT TO EXCEED 1 FASTENER EVERY 1 SQUARE FEET
   - CONSTANT DENSITY OF 1 FASTENER EVERY 1 SQUARE FEET FOR CORNERS.

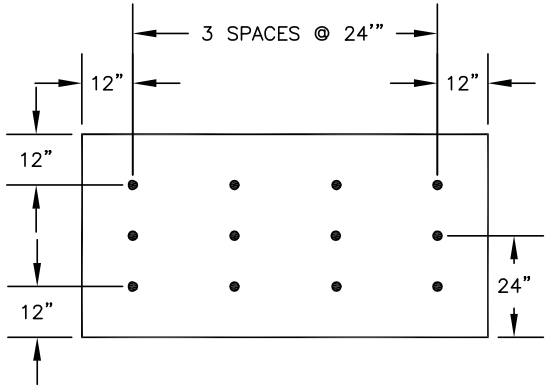

FIELD (12)
1 FASTENER PER EVERY 2.66 SQ. FT.

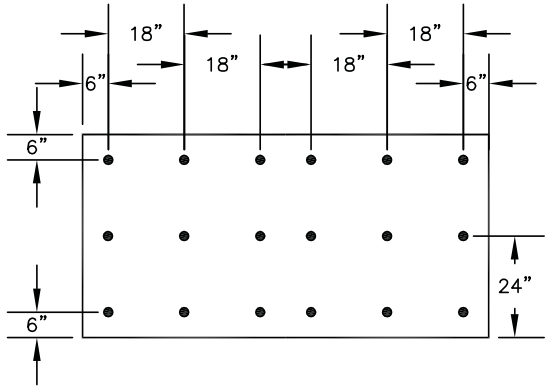

PERIMETER (18)
1 FASTENER PER EVERY 1.77 SQ. FT.

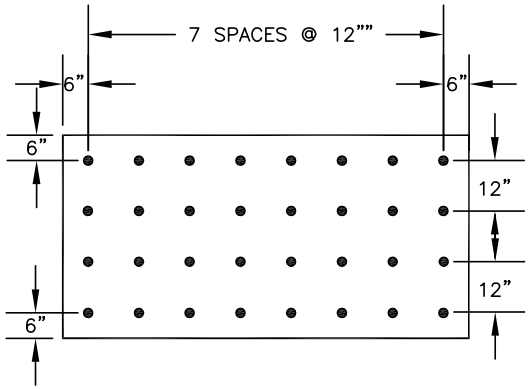

CORNERS (32)
1 FASTENER PER EVERY 1 SQ. FT.

MULE-HIDE PRODUCTS CO., INC.	**FM - 12 FIELD FASTENERS PER 4' X 8' BOARD PATTERN LAYOUT** **SYSTEMS:** **FULLY ADHERED**	**DETAIL NO.:** **MHT-FM-725** REVISION DATE: 10/2013

®

NOTES:

1. THESE FASTENING PATTERNS ARE TO BE USED WHEN THE PROJECT REQUIRES A FACTORY MUTUAL RATED SYSTEM. CONTACT MULE–HIDE TECHNICAL DEPARTMENT FOR APPROPRIATE USE OF THESE PATTERNS.

2. MULE–HIDE INSULATION FASTENERS AND 3" DIAMETER PLATES MUST BE USED FOR INSULATION ATTACHMENT.

3. REFER TO MULE–HIDE WIND UPLIFT RATINGS FOR APPROPRIATE FASTENER DENSITY REQUIRED.

4. FASTENER DENSITY INCREASES BASED ON THE FOLLOWING:
   - 50% FOR PERIMETERS WITH A MINIMUM OF 1 FASTENER EVERY 2 SQUARE FEET NOT TO EXCEED 1 FASTENER EVERY 1 SQUARE FEET
   - CONSTANT DENSITY OF 1 FASTENER EVERY 1 SQUARE FEET FOR CORNERS.

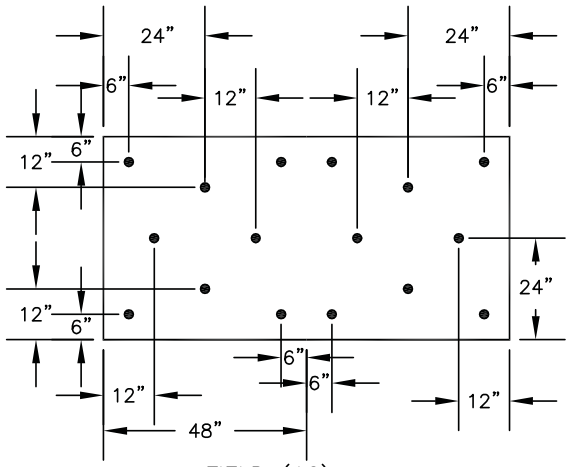

FIELD (16)
1 FASTENER PER EVERY 2 SQ. FT.

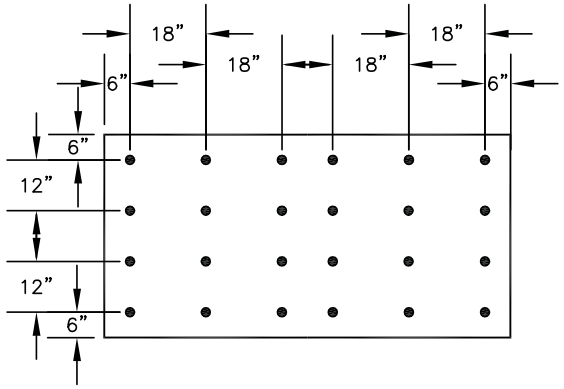

PERIMETER (24)
1 FASTENER PER EVERY 1.33 SQ. FT.

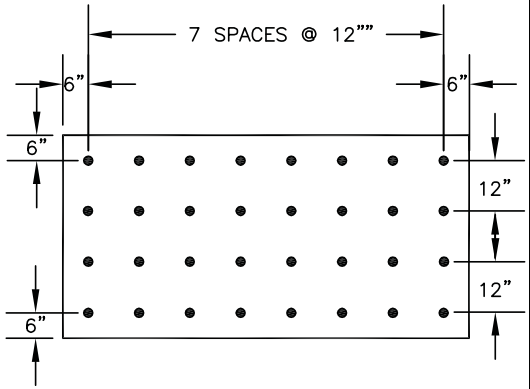

CORNERS (32)
1 FASTENER PER EVERY 1 SQ. FT.

MULE-HIDE PRODUCTS CO., INC.	**FM - 16 FIELD FASTENERS PER 4' X 8' BOARD PATTERN LAYOUT** **SYSTEMS:** **FULLY ADHERED**	**DETAIL NO.:** **MHT-FM-726** REVISION DATE: 10/2013

®

NOTES:

1. THESE FASTENING PATTERNS ARE TO BE USED WHEN THE PROJECT REQUIRES A FACTORY MUTUAL RATED SYSTEM. CONTACT MULE-HIDE TECHNICAL DEPARTMENT FOR APPROPRIATE USE OF THESE PATTERNS.

2. MULE-HIDE INSULATION FASTENERS AND 3" DIAMETER PLATES MUST BE USED FOR INSULATION ATTACHMENT.

3. REFER TO MULE-HIDE WIND UPLIFT RATINGS FOR APPROPRIATE FASTENER DENSITY REQUIRED.

4. FASTENER DENSITY INCREASES BASED ON THE FOLLOWING:
   - 50% FOR PERIMETERS WITH A MINIMUM OF 1 FASTENER EVERY 2 SQUARE FEET NOT TO EXCEED 1 FASTENER EVERY 1 SQUARE FEET
   - CONSTANT DENSITY OF 1 FASTENER EVERY 1 SQUARE FEET FOR CORNERS.

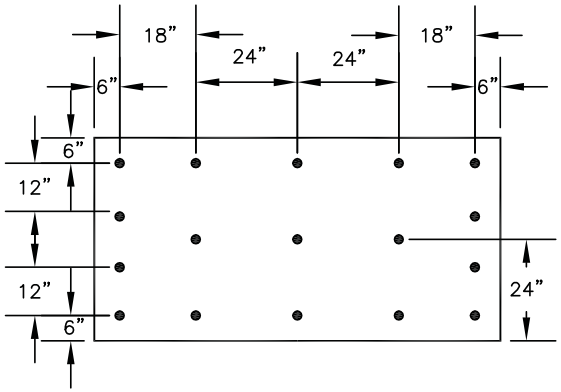

FIELD (17)
1 FASTENER PER EVERY 1.88 SQ. FT.

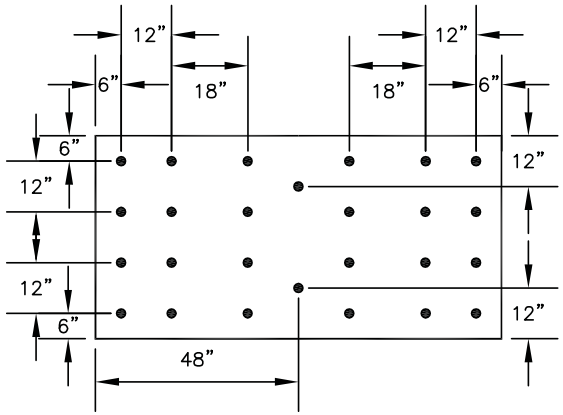

PERIMETER (26)
1 FASTENER PER EVERY 1.23 SQ. FT.

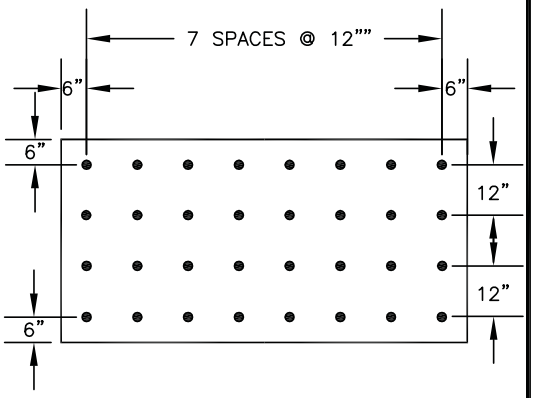

CORNERS (32)
1 FASTENER PER EVERY 1 SQ. FT.

MULE-HIDE PRODUCTS CO., INC.	**FM - 17 FIELD FASTENERS PER 4' X 8' BOARD PATTERN LAYOUT** **SYSTEMS:** **FULLY ADHERED**	**DETAIL NO.:** **MHT-FM-727** REVISION DATE: 10/2013

®

SECTION 09

MULE-HIDE PRODUCTS CO., INC.

TPO
Product Data Sheets

Please consult the Mule-Hide website for the most current information at www.mulehide.com

MULE-HIDE TPO
PRODUCT DATA SHEETS (PDS)

TABLE OF CONTENTS

Please consult the Mule-Hide website for the most current information at www.mulehide.com

Mule-Hide Products Co., Inc.
1195 Prince Hall Dr.
Beloit, WI 53511

PRODUCT DATA SHEET
PDS 09-1105
Revision Date: February 2012

MULE-HIDE TPO-c MEMBRANE (Standard and FR)

PRODUCT DESCRIPTION

Mule-Hide's TPO-c Membrane is a polyester reinforced, .045" or .060 thick, polyolefin based, thermoplastic, heat-weldable membrane. High breaking strength, tearing strength, and puncture resistance is achieved by encapsulating a strong polyester fabric between the top and bottom plies. Mule-Hide TPO-c FR membrane is formulated with additional flame retardant (compared to Standard) for higher slope fire code approvals. The Mule-Hide TPO-c membrane is also available in a 0.80" thickness (see Product Data Sheet for TPO-c EXTRA). The membrane is environmentally friendly and safe to install.

BASIC USES

The TPO-c membrane is used in mechanically attached and fully adhered roofing systems in new construction, reroofing and recover (retrofit) applications. It may also be used as flexible membrane flashings for walls, curbs, etc, when installing TPO-c membrane roofing systems. The system must be installed over acceptable roof insulation or other suitable substrate. See the Mule-Hide TPO Specifications Manual for complete specifications and details.

SPECIFICATIONS

Colors: White top/Black bottom (Standard)
(Special Order Top Colors) Tan and Gray.
Material: .045-inch and .060-inch (nominal) thick polyester reinforced thermoplastic
Sizes: Field Sheet – 8', 10' and 12' by 100'
Perimeter Sheet – 4' and 6' by 100'
Weights: 45 Mil - 0.23 lb/ft^2 (1.1 kg/m^2) typical
60 Mil - 0.29 lb/ft^2 (1.4 kg/m^2) typical

Physical Properties	Test Method	45-mil	60-mil
Thickness Tolerance on nominal, %	ASTM D-751	±10	±10
Thickness over scrim, in. (mm) (avg. of 3 areas)	ASTM D-6878 Optical Method	0.018 (0.457) ±10%	0.024 (0.610) ±10%
Breaking Strength, lbf (kN)	ASTM D-751 (Grab Method)	225 (1.0) min. 320 (1.4) typical	250 (1.1) min. 360 (1.6) typical
Elongation at break of fabric	ASTM D-751	15 minimum 25 typical	15 minimum 25 typical
Tear Strength, lbf (N) 8 by 8 in. specimen	ASTM D-751 (B Tongue Tear)	55 (245) min. 130 (578) typical	55 (245) min. 130 (578) typical
Brittleness point, F° (C°)	ASTM D-2137	-40 (-40) max. -50 (-46) typical	-40 (-40) max. -50 (-46) typical
Linear Dimensional Change (shrinkage) % change	ASTM D-1204 6 hours @ 158° F (70° C)	+/-1 max - 0.2 typical	+/-1 max - 0.2 typical
Ozone resistance, 100 pphm, 168 hrs.	ASTM D-1149	No cracks	No cracks
Factory seam strength, lbf/in (kN/m)	ASTM D-751	66 (290) minimum	66 (290) minimum
Field seam strength, lbf/in. (kN/m) Seams tested in peel	ASTM D-1876	25 (4.4) min. 50 (8.8) typical	25 (4.4) min. 60 (10.5) typical
Water vapor permeance, Perms	ASTM E-96 proc. B	0.10 max. 0.05 typical	0.10 max. 0.05 typical
Water Absorption	ASTM D-471 @ 158°F, 166 hours	3.0 max. 2.0 typical	3.0 max. 2.0 typical
Puncture resistance, lbf (N)	FTM 101C Method 2031	250 (1.1) min. 325 (1.4) typical	300 (1.3) min. 350 (1.6) typical
Properties after heat aging ASTM D573 670 hrs at 240°F (116° C)	Breaking Strength, % retained Elongation reinf., % retained Tearing Strength, % retained Weight change, %	90% min 90% min 60% min ± 1.0% max.	90% min 90% min 60% min ± 1.0% max.

MULE-HIDE TPO-c MEMBRANE (Standard and FR)

BENEFITS & SUPPLEMENTAL STATEMENTS

- Wide window of weldability
- Outstanding puncture resistance
- Chlorine-free with no halogenated flame retardants
- Excellent low temperature impact resistance
- Excellent chemical resistance to acids, bases, restaurant oils and greases
- Plasticizer-free, does not contain liquid or polymeric plasticizer
- Exceptional resistance to solar UV, ozone and oxidation
- Low water vapor permeance and water absorption
- Hot melt extrusion processed for complete scrim encapsulation
- Non woven reinforcement fabric for smooth surface and greater thickness-over-scrim
- Polyester reinforcing fabric which is resistant to degradation by bacteria, mildew and fungi
- TPO-c is 100% recyclable

CODE APPROVALS/COMPLIANCE

A variety of Factory Mutual Ratings and Underwriters Laboratories Classifications are available. Contact Mule-Hide Warranty Department for additional information.

INSTALLATION INSTRUCTIONS

1) Approved insulation shall be attached to the roof deck with an approved insulation adhesive or approved fasteners and plates. Install insulation with its largest dimension perpendicular to the direction of the membrane seams where possible.
2) Mechanically Attached Roofing System
   a) Perimeter sheets to be installed in an approved pattern along all exterior roof edges.
   b) Mechanical fasteners and plates are installed in the seams of both the perimeter sheets and field sheets and into the roof deck. Use approved fasteners and maintain proper penetration for specific roof deck.
3) Fully Adhered Roofing System
   a) Perimeter sheets are not required.
   b) The membrane is required to be mechanically attached at the base of all vertical surfaces, roof edges, and angle changes.
   c) The field of the roof is fully adhered to the substrate with Mule-Hide TPO Bonding Adhesive.
4) All seams are hot air welded and checked by probing.
5) All details will be done in accordance with Mule-Hide details.
6) On projects where a Mule-Hide Standard or Premium Warranty is requested, an authorized Mule-Hide representative shall inspect all completed work. This is only a brief summary and not the complete specification. The Mule-Hide Specifications, Details, Technical Bulletins, and associated documents should be thoroughly reviewed prior to starting any project. Contact Mule-Hide Products for additional information.

PRECAUTIONS

- Surfaces may be slippery when wet, or due to frost and ice build-up. Exercise caution to prevent falls.
- Mule-Hide TPO membranes are highly reflective to sunlight. Workers should dress appropriately, wear sunscreen, and wear sunglasses that filter out UV light.
- Exercise care when working near roof edge. Roof edges may not be visible when surrounding area is covered with snow.
- Store Mule-Hide membrane in original wrappings in a cool, shaded area. Cover with light-colored, breathable, waterproof tarpaulins. Mule-Hide membrane that has been exposed to the elements for approximately 7 days or longer must be prepared with Weathered Membrane Cleaner prior to hot air welding.

MULE-HIDE TPO-c MEMBRANE (Standard and FR)

PROTECTION & SAFETY

Mule-Hide maintains Material Safety Data Sheets on all of its products. Material Safety Data Sheets contain health and safety information for your development of appropriate product handling procedures to protect your employees and customers. Mule-Hide's Material Safety Data Sheets should be read and understood by all of your supervisory personnel and employees before using Mule-Hide products in your facilities.

SUPPLEMENTAL APPROVALS, STATEMENTS AND CHARACTERISTICS

1) TPO-c meets and exceeds the requirements of **ASTM D6878**[1] Standard Specification for Thermoplastic Polyolefin Based Sheet Roofing

2) **Radiative Properties** for ENERGY STAR®, Cool Roof Rating Council (CRRC) and LEED™

DESCRIPTION	TEST METHOD	WHITE TPO-c	TAN TPO-c	GRAY TPO-c
ENERGY STAR® initial solar reflectance	Solar Spectrum Reflectometer	0.79	0.68	N/A
ENERGY STAR® solar reflectance after 3 years	Solar Spectrum Reflectometer (uncleaned)	0.70	0.64	N/A
ENERGY STAR® initial emissivity		0.90	0.95	
CRRC initial solar reflectance	ASTM C1549	0.79	0.71	0.46
CRRC solar reflectance after 3 years	ASTM C1549 (uncleaned)	0.70	0.64	0.43
CRRC initial thermal emittance	ASTM C1371	0.90	0.86	0.89
CRRC thermal emittance after 3 years	ASTM C1371 (uncleaned)	0.86	0.87	0.88
CRRC SRI (Solar Reflectance Index)	ASTM E1980	99	86	53
CRRC SRI (Solar Reflectance Index after 3 yrs)	ASTM E1980	85	77	48
CRRC Product ID	N/A	0670-0009	0670-0016	0670-0017
LEED™ thermal emittance	ASTM E408	0.95	0.95	0.95

3) Mule-Hide tan and white TPO membranes are LEED compliant and are ENERGY STAR® and California Title 24 rated roof products.

   An ENERGY STAR qualified low slope roof product must have an initial solar reflectance of at least 0.65 and a 3-year aged solar reflectance of at least 0.50. Cleaning the aged roof surface is not permitted by the ENERGY STAR test protocol. Energy Star is only valid in the United States for Roofing Products.

   The Cool Roof Rating Council (CRRC) does not specify minimums for reflectance or emittance but they do require specific protocols for testing and reporting. Cleaning of the aged roof surface is not permitted for determination of radiative properties after 3 years.

   A LEED “point” may be earned if a roof material is ENERGY STAR qualified and has a thermal emittance of at least 0.90 as determined by ASTM E408.

   Solar Reflectance Index (SRI) is calculated per ASTM E 1980. The SRI is a measure of the roof's ability to reject solar heat, as shown by a small temperature rise. It is defined so that a standard black (reflectance 0.05, emittance 0.90) is 0 and a standard white (reflectance 0.80, emittance 0.90) is 100. Materials with the highest SRI values are the coolest choices for roofing. Due to the way SRI is defined, particularly hot materials can even take slightly negative values, and particularly cool materials can even exceed 100.

   California Title 24 requires an initial minimum reflectance of 0.70 and emittance of 0.75 as determined by CRRC.

4) TPO-c membranes conform to requirements of the U.S.E.P.A. Toxic Leachate Test (40 CFR part 136) performed by an independent analytical laboratory.

MULE-HIDE TPO-c MEMBRANE (Standard and FR)

SUPPLEMENTAL APPROVALS, STATEMENTS AND CHARACTERISTICS - CONTINUED

5) TPO-c was tested for dynamic puncture resistance per ASTM D5635-04 using the most recently modified impact head. 45-mil was watertight after an impact energy of 12.5 J (9.2 ft-lbf) and 60-mil was watertight after an impact energy of 22.5 J (16.6 ft-lbf)

EXTREME TESTING – HEAT AGING		
Test Method	**ASTM Requirement**	**Typical Results**
ASTM Test - 240º F (116º C), No Visible Cracks	32 Weeks	52 Weeks
Extreme Test - 275º F (135º C), No Visible Cracks	N/A	13 Weeks
Test specimen is 1" by 4" piece of 45-mil membrane unbacked, placed in circulating hot-air oven Criterion-no visible cracks after bending aged test sample around 0.25" diameter mandrel.		
Heat Aging accelerates the oxidation rate that roughly doubles for each 10º C (18º F) increase in roof membrane temperature. Oxidation (reaction with oxygen) is one of the primary chemical degradation mechanisms of roofing materials.		

EXTREME TESTING – ENVIRONMENTAL CYCLING	
Extreme Test One cycle consists of 4 series of tests	10 days heat aging at 240º F (116º C) followed by 5 days of water immersion at 158º F (70º C) or with another specimen set 5 eight-hours cycles in Kesternich sulfur dioxide chamber (sulfurous acid fog) 5040 kJ/m^2 (2000 hours @ 0.70 W/ m^2 irradiance) xenon-arc exposure
Test Criteria	After three complete cycles, test specimens shall remain flexible and not have any cracking under 10X magnification while wrapped around a 3" mandrel. Test sample is 2.75" x 5.5" piece of membrane with edges sealed.
Environmental Cycling subjects the membrane to repeated cycles of heat aging, hot-water immersion or acid fog followed by xenon-arc exposure. The acid fog accelerates acid etching that may occur from acid rain if the roof membrane is not resistant to acidic conditions.	

XENON-ARC TESTING				
	ASTM D6878 Requirement	**Typical Results 45-mil**	**Typical Results 60-mil**	**Typical Results 80-mil**
kJ/ m^2 at 340 nm	10,080	17,640	20,160	27,720
Test sample is 2.75" by 5.5" piece of membrane, unbacked, weathering side facing arc lamp. Criterion-no visible cracks viewed under 10x magnification while wrapped around 3" diameter mandrel.				
Xenon-Arc exposes the membrane samples to the combined effect of ultraviolet, visible and infrared radiation, ozone, heat and water spray, to greatly accelerate the affects of outdoor weathering. The radiation "dose" is measured in kilojoules per square meter (kJ/ m^2) at 340 nm machine UV wavelength. The irradiance "power" of the xenon-arc lamp is measured in Watts per square meter (W/m^2). Test specimen is 2.75 by 5.5 in. piece of membrane, unbacked, weathering side facing lamp. Criteria – no visible cracks viewed under 10X magnification while wrapped around a 3 in. mandrel.				

ADDITIONAL INFORMATION

The information given on this PDS is subject to change without notice. Always check the Mule-Hide website at www.mulehide.com for the latest information, changes and updates or contact Mule-Hide Products Company at 800-786-1492.

DISCLAIMER

The statements provided concerning the material shown are intended as a guide for material usage and are believed to be true and accurate at the time of printing. No statement made by anyone may supersede this information, except when done in writing by Mule-Hide Products Co., Inc. Since the manner of use is beyond our control, Mule-Hide does not authorize anyone to make any warranty of merchantability or fitness for any particular purpose or any other warranty, guarantee or representation, expressed or implied, concerning this material. This product may be eligible for a Mule-Hide warranty, please check the Mule-Hide website at www.mulehide.com or contact Mule-Hide directly at 800-786-1492 for details. Buyer and user accept the product under these conditions and assume the risk of any failure, any injury person or property (including that of the user), loss or liability resulting from the handling, storage or use of the product whether or not it is handled, stored or used in accordance with the directions or specifications. Mule-Hide must be notified in writing of any claims and be given the opportunity to inspect the alleged failure before repairs are made.

Mule-Hide Products Co., Inc.
1195 Prince Hall Dr.
Beloit, WI 53511

PRODUCT DATA SHEET
PDS 09-1110
Revision Date: February 2012

MULE-HIDE TPO-c EXTRA MEMBRANE

PRODUCT DESCRIPTION

Mule-Hide's TPO-c EXTRA Membrane is a polyester reinforced, .080" thick, polyolefin based, thermoplastic, heat-weldable membrane. High breaking strength, tearing strength, and puncture resistance is achieved by encapsulating a strong polyester fabric between the top and bottom plies. The .080" thickness affords higher strength and weatherability when compared to our .045" and .060" products. The membrane is environmentally friendly and safe to install.

BASIC USES

The TPO-c membrane is used in mechanically attached and fully adhered roofing systems in new construction, reroofing and recover (retrofit) applications. It may also be used as flexible membrane flashings for walls, curbs, etc, when installing TPO-c membrane roofing systems. The system must be installed over an acceptable roof insulation or other suitable substrate. See the Mule-Hide TPO Specifications Manual for complete specifications and details.

SPECIFICATIONS

Colors: White top/Black bottom (Standard)
(Special Order Top Colors) Tan and Gray.
Material: .080-inch (nominal) thick polyester reinforced thermoplastic
Sizes: Field Sheet – 8', 10' and 12' by 100'
Perimeter Sheet – 4' and 6' by 100'
Weights: 80 Mil - 0.40 lb/ft^2 (2.0 kg/m^2) typical

Physical Properties	Test Method	80-mil
Thickness Tolerance on nominal, %	ASTM D-751	±10
Thickness over scrim, in. (mm) (avg. of 3 areas)	ASTM D-6878 Optical Method	0.034 (0.864) ±10%
Breaking Strength, lbf (kN)	ASTM D-751 (Grab Method)	350 (1.6) min. 425 (1.9) typical
Elongation at break of fabric	ASTM D-751	15 minimum 25 typical
Tear Strength, lbf (N) 8 by 8 in. specimen	ASTM D-751 (B Tongue Tear)	55 (245) min. 130 (578) typical
Brittleness point, Fº (Cº)	ASTM D-2137	-40 (-40) max. -50 (-46) typical
Linear Dimensional Change (shrinkage) % change	ASTM D-1204 6 hours @ 158º F (70º C)	+/-1 max - 0.2 typical
Ozone resistance, 100 pphm, 168 hrs.	ASTM D-1149	No cracks
Factory seam strength, lbf/in (kN/m)	ASTM D-751	66 (290) minimum
Field seam strength, lbf/in. (kN/m) Seams tested in peel	ASTM D-1876	40 (7.0) min. 70 (12.3) typical
Water vapor permeance, Perms	ASTM E-96 proc. B	0.10 max. 0.05 typical
Water Absorption	ASTM D-471 @ 158ºF, 166 hours	3.0 max. 2.0 typical
Puncture resistance, lbf (N)	FTM 101C Method 2031	400 (1.8) min. 450 (2.0) typical
Properties after heat aging ASTM D573 670 hrs at 240ºF (116º C)	Breaking Strength, % retained Elongation reinf., % retained Tearing Strength, % retained Weight change, %	90% min 90% min 60% min ± 1.0% max.

MULE-HIDE TPO-c EXTRA MEMBRANE

BENEFITS & SUPPLEMENTAL STATEMENTS

- Wide window of weldability
- Outstanding puncture resistance
- Chlorine-free with no halogenated flame retardants
- Excellent low temperature impact resistance
- Excellent chemical resistance to acids, bases, restaurant oils and greases
- Plasticizer-free, does not contain liquid or polymeric plasticizer
- Exceptional resistance to solar UV, ozone and oxidation
- Low water vapor permeance and water absorption
- Hot melt extrusion processed for complete scrim encapsulation
- Non woven reinforcement fabric for smooth surface and greater thickness-over-scrim
- Polyester reinforcing fabric which is resistant to degradation by bacteria, mildew and fungi
- TPO-c is 100% recyclable

CODE APPROVALS/COMPLIANCE

A variety of Factory Mutual Ratings and Underwriters Laboratories Classifications are available. Contact Mule-Hide Warranty Department for additional information.

INSTALLATION INSTRUCTIONS

1) Approved insulation shall be attached to the roof deck with an approved insulation adhesive or approved fasteners and plates. Install insulation with its largest dimension perpendicular to the direction of the membrane seams where possible.
2) Mechanically Attached Roofing System
   a) Perimeter sheets to be installed in an approved pattern along all exterior roof edges.
   b) Mechanical fasteners and plates are installed in the seams of both the perimeter sheets and field sheets and into the roof deck. Use approved fasteners and maintain proper penetration for specific roof deck.
3) Fully Adhered Roofing System
   a) Perimeter sheets are not required.
   b) The membrane is required to be mechanically attached at the base of all vertical surfaces, roof edges, and angle changes.
   c) The field of the roof is fully adhered to the substrate with Mule-Hide TPO Bonding Adhesive.
4) All seams are hot air welded and checked by probing.
5) All details will be done in accordance with Mule-Hide details.
6) On projects where a Mule-Hide Standard or Premium Warranty is requested, an authorized Mule-Hide representative shall inspect all completed work. This is only a brief summary and not the complete specification. The Mule-Hide Specifications, Details, Technical Bulletins, and associated documents should be thoroughly reviewed prior to starting any project. Contact Mule-Hide Products for additional information.

PRECAUTIONS

- Surfaces may be slippery when wet, or due to frost and ice build-up. Exercise caution to prevent falls.
- Mule-Hide TPO membranes are highly reflective to sunlight. Workers should dress appropriately, wear sunscreen, and wear sunglasses that filter out UV light.
- Exercise care when working near roof edge. Roof edges may not be visible when surrounding area is covered with snow.
- Store Mule-Hide membrane in original wrappings in a cool, shaded area. Cover with light-colored, breathable, waterproof tarpaulins. Mule-Hide membrane that has been exposed to the elements for approximately 7 days or longer must be prepared with Weathered Membrane Cleaner prior to hot air welding.

MULE-HIDE TPO-c EXTRA MEMBRANE

PROTECTION & SAFETY

Mule-Hide maintains Material Safety Data Sheets on all of its products. Material Safety Data Sheets contain health and safety information for your development of appropriate product handling procedures to protect your employees and customers. Mule-Hide's Material Safety Data Sheets should be read and understood by all of your supervisory personnel and employees before using Mule-Hide products in your facilities.

SUPPLEMENTAL APPROVALS, STATEMENTS AND CHARACTERISTICS

1) TPO-c meets and exceeds the requirements of **ASTM D6878**[1] Standard Specification for Thermoplastic Polyolefin Based Sheet Roofing

2) **Radiative Properties** for ENERGY STAR®, Cool Roof Rating Council (CRRC) and LEED™

DESCRIPTION	TEST METHOD	WHITE TPO-c	TAN TPO-c	GRAY TPO-c
ENERGY STAR® initial solar reflectance	Solar Spectrum Reflectometer	0.79	0.68	N/A
ENERGY STAR® solar reflectance after 3 years	Solar Spectrum Reflectometer (uncleaned)	0.70	0.64	N/A
ENERGY STAR® initial emissivity		0.90	0.95	
CRRC initial solar reflectance	ASTM C1549	0.79	0.71	0.46
CRRC solar reflectance after 3 years	ASTM C1549 (uncleaned)	0.70	0.64	0.43
CRRC initial thermal emittance	ASTM C1371	0.90	0.86	0.89
CRRC thermal emittance after 3 years	ASTM C1371 (uncleaned)	0.86	0.87	0.88
CRRC SRI (Solar Reflectance Index)	ASTM E1980	99	86	53
CRRC SRI (Solar Reflectance Index after 3 yrs)	ASTM E1980	85	77	48
CRRC Product ID	N/A	0670-0009	0670-0016	0670-0017
LEED™ thermal emittance	ASTM E408	0.95	0.95	0.95

3) Mule-Hide tan and white TPO membranes are LEED compliant and are ENERGY STAR® and California Title 24 rated roof products.

   An ENERGY STAR qualified low slope roof product must have an initial solar reflectance of at least 0.65 and a 3-year aged solar reflectance of at least 0.50. Cleaning the aged roof surface is not permitted by the ENERGY STAR test protocol. Energy Star is only valid in the United States for Roofing Products.

   The Cool Roof Rating Council (CRRC) does not specify minimums for reflectance or emittance but they do require specific protocols for testing and reporting. Cleaning of the aged roof surface is not permitted for determination of radiative properties after 3 years.

   A LEED “point” may be earned if a roof material is ENERGY STAR qualified and has a thermal emittance of at least 0.90 as determined by ASTM E408.

   Solar Reflectance Index (SRI) is calculated per ASTM E 1980. The SRI is a measure of the roof's ability to reject solar heat, as shown by a small temperature rise. It is defined so that a standard black (reflectance 0.05, emittance 0.90) is 0 and a standard white (reflectance 0.80, emittance 0.90) is 100. Materials with the highest SRI values are the coolest choices for roofing. Due to the way SRI is defined, particularly hot materials can even take slightly negative values, and particularly cool materials can even exceed 100.

   California Title 24 requires an initial minimum reflectance of 0.70 and emittance of 0.75 as determined by CRRC.

4) TPO-c membranes conform to requirements of the U.S.E.P.A. Toxic Leachate Test (40 CFR part 136) performed by an independent analytical laboratory.

MULE-HIDE TPO-c EXTRA MEMBRANE

SUPPLEMENTAL APPROVALS, STATEMENTS AND CHARACTERISTICS - CONTINUED

5) TPO-c was tested for dynamic puncture resistance per ASTM D5635-04 using the most recently modified impact head. 80-mil was watertight after an impact energy of 30 J (22.1 ft-lbf)

[1]Copyright © ASTM International, 100 Barr Harbor Drive, West Conshohocken, PA 19428-2959, USA

EXTREME TESTING – HEAT AGING		
Test Method	**ASTM Requirement**	**Typical Results**
ASTM Test - 240º F (116º C), No Visible Cracks	32 Weeks	52 Weeks
Extreme Test - 275º F (135º C), No Visible Cracks	N/A	13 Weeks
Test specimen is 1" by 4" piece of 45-mil membrane unbacked, placed in circulating hot-air oven Criterion-no visible cracks after bending aged test sample around 0.25" diameter mandrel.		
Heat Aging accelerates the oxidation rate that roughly doubles for each 10º C (18º F) increase in roof membrane temperature. Oxidation (reaction with oxygen) is one of the primary chemical degradation mechanisms of roofing materials.		

EXTREME TESTING – ENVIRONMENTAL CYCLING	
Extreme Test One cycle consists of 4 series of tests	10 days heat aging at 240º F (116º C) followed by 5 days of water immersion at 158º F (70º C) or with another specimen set 5 eight-hours cycles in Kesternich sulfur dioxide chamber (sulfurous acid fog) 5040 kJ/m^2 (2000 hours @ 0.70 W/ m^2 irradiance) xenon-arc exposure
Test Criteria	After three complete cycles, test specimens shall remain flexible and not have any cracking under 10X magnification while wrapped around a 3" mandrel. Test sample is 2.75" x 5.5" piece of membrane with edges sealed.
Environmental Cycling subjects the membrane to repeated cycles of heat aging, hot-water immersion or acid fog followed by xenon-arc exposure. The acid fog accelerates acid etching that may occur from acid rain if the roof membrane is not resistant to acidic conditions.	

XENON-ARC TESTING				
	ASTM D6878 Requirement	**Typical Results 45-mil**	**Typical Results 60-mil**	**Typical Results 80-mil**
kJ/ m^2 at 340 nm	10,080	17,640	20,160	27,720
Test sample is 2.75" by 5.5" piece of membrane, unbacked, weathering side facing arc lamp. Criterion-no visible cracks viewed under 10x magnification while wrapped around 3" diameter mandrel.				
Xenon-Arc exposes the membrane samples to the combined effect of ultraviolet, visible and infrared radiation, ozone, heat and water spray, to greatly accelerate the affects of outdoor weathering. The radiation "dose" is measured in kilojoules per square meter (kJ/ m^2) at 340 nm machine UV wavelength. The irradiance "power" of the xenon-arc lamp is measured in Watts per square meter (W/m^2). Test specimen is 2.75 by 5.5 in. piece of membrane, unbacked, weathering side facing lamp. Criteria – no visible cracks viewed under 10X magnification while wrapped around a 3 in. mandrel.				

ADDITIONAL INFORMATION

The information given on this PDS is subject to change without notice. Always check the Mule-Hide website at www.mulehide.com for the latest information, changes and updates or contact Mule-Hide Products Company at 800-786-1492.

DISCLAIMER

The statements provided concerning the material shown are intended as a guide for material usage and are believed to be true and accurate at the time of printing. No statement made by anyone may supersede this information, except when done in writing by Mule-Hide Products Co., Inc. Since the manner of use is beyond our control, Mule-Hide does not authorize anyone to make any warranty of merchantability or fitness for any particular purpose or any other warranty, guarantee or representation, expressed or implied, concerning this material. This product may be eligible for a Mule-Hide warranty, please check the Mule-Hide website at www.mulehide.com or contact Mule-Hide directly at 800-786-1492 for details. Buyer and user accept the product under these conditions and assume the risk of any failure, any injury person or property (including that of the user), loss or liability resulting from the handling, storage or use of the product whether or not it is handled, stored or used in accordance with the directions or specifications. Mule-Hide must be notified in writing of any claims and be given the opportunity to inspect the alleged failure before repairs are made.

Mule-Hide Products Co., Inc.
1195 Prince Hall Dr.
Beloit, WI 53511

PRODUCT DATA SHEET
PDS 09-1120
Revision Date: February 2012

MULE-HIDE TPO-c Fleece Back MEMBRANE

PRODUCT DESCRIPTION

Mule-Hide's TPO-c Fleece Back FB-045, FB-060 and FB-080 Membranes are polyester reinforced, .045", .060" or .080" thick, polyolefin based thermoplastic, heat-weldable membranes with a 55-mil polyester fleece backing.

BASIC USES

The TPO-c Fleece Back membrane is used in fully adhered and mechanically attached roofing systems in new construction, reroofing and recover (retrofit) applications. The system must be installed over an acceptable roof insulation or other suitable substrate. See the Mule-Hide TPO Fleece Back Specifications Manual for complete specifications and details.

SPECIFICATIONS

Colors: White top/Gray bottom Standard - Special Order Top Colors Tan and Gray
Material: 45-mil (FB-45), 60-mil (FB-60) and 80-mil (FB-80) (nominal) thick polyester reinforced thermoplastic
FB-045 = 100 mils total thickness, FB-60 = 115 mils total thickness, FM-80 = 135 mils total thickness

Physical Properties	Test Method	Specification (min.)	Mule-Hide TPO
Tolerance on Nominal Thickness, %	ASTM D751	± -10	± -10
Thickness over fleece FB-45 (100 mils total) FB-60 (115 mils total) FB-80 (135 mils total)	ASTM D4637	 0.030 inch (.762 mm) 0.045 inch (1.14 mm) 0.080 inch (2.03 mm)	 0.045 inch (1.14 mm) 0.060 inch (1.52 mm) 0.080 inch (2.03 mm)
Weight FB-45 (100 mils total) FB-60 (115 mils total) FB-80 (135 mils total)	 --- --- ---	 --- --- ---	 0.27 lbm/ft^2 0.34 lbm/ft^2 0.44 lbm/ft^2
Breaking Strength FB-45 (100 mils total) FB-60 (115 mils total) FB-80 (135 mils total)	ASTM D-751 (Grab Method)	90 lb (0.4 kN)	 300 lb (1.3 kN) 400 lb (1.8 kN) 425 lb (1.9 kN)
Elongation at break of internal fabric	ASTM D-751	---	25% typical
Tearing Strength, B Tongue Tear	ASTM D-751	10 lb (45 kN)	55 lb (245 kN)
Brittleness point	ASTM D-2137	-40 F° (-40 C°) max.	-50 F° (-46 C°)
Linear Dimensional Change	ASTM D-1204	+/- 1.0% max	-0.2% typical
Ozone resistance, 100 pphm, 168 hours	ASTM D-1149	No cracks	No cracks
Resistance to water absorption After 7 days immersion 158ºF (70ºC) Change in mass, %	ASTM D-471 (fleece removed, edges sealed)	+ 4.0%	+2.0%
Resistance to microbial surface growth, rating (1 is very poor, 10 is no growth)	ASTM D-3274	---	9-10 typical
Field seam strength, seam tested in peel FB-45 (100 mils total) FB-60 (115 mils total) FB-80 (135 mils total)	ASTM D-1876	 25 lbf/in (4.4 kN/m) 25 lbf/in (4.4 kN/m) 40 lbf/in (7.0 kN/m)	 40 lbf/in (7.4 kN/m) 60 lbf/in (10.5 kN/m) 70 lbf/in (12.3 kN/m)
Water vapor permeance, Proc B	ASTM E-96	---	0.10 perms max 0.05 perms typical
Puncture resistance FB-45 (100 mils total) FB-60 (115 mils total) FB-80 (135 mils total)	FTM 101C Method 2031 (lbf) ASTM D5635 (Joules)	 350 lbf (--- Joules) 400 lbf (--- Joules) 425 lbf (--- Joules)	 450 lbf (17.5 Joules) 500 lb (22.5 Joules) 525 lb (30.0 Joules)
Resistance to Outdoor (UV) Weathering Xenon-Arc, 0.70 W/m^2 irradiance exposure FB-45 (100 mils total) FB-60 (115 mils total) FB-80 (135 mils total)	ASTM G155 0.70 W/m^2 80ºC B.P.T.	No cracks No loss of breaking or tearing strength	No cracks No loss of breaking or tearing strength 17,640 kg/m^2 20,160 kg/m^2 27,720 kg/m^2
Properties after heat aging Breaking Strength - % retained Elongation Reinforced - % retained Tearing Strength - % retained Weight Change - %	ASTM D573 670 hrs @ 240 ºF	 --- --- --- ---	 90% min 90% min 60% min ± 1.0% max

MULE-HIDE TPO-c Fleece Back MEMBRANE

BENEFITS & SUPPLEMENTAL STATEMENTS

- Wide window of weldability
- Outstanding puncture resistance which is enhanced further by the fleece backing
- Chlorine-free with no halogenated flame retardants
- Excellent low temperature impact resistance
- Excellent chemical resistance to acids, bases, restaurant oils and greases
- Plasticizer-free, does not contain liquid or polymeric plasticizer
- Exceptional resistance to solar UV, ozone and oxidation
- Hot melt extrusion processed for complete scrim encapsulation
- Warp knitted fabric (not woven) for smooth surface and greater thickness-over-scrim
- Low vapor permeance and water absorption
- Polyester reinforcing fabric and fleece backing which are resistant to degradation by bacteria, mildew and fungi
- Polyester fleece backing for fully adhered systems provided exceptional wind uplift resistance
- TPO-c Fleece Back is 100% recyclable

CODE APPROVALS/COMPLIANCE

A variety of Factory Mutual Ratings and Underwriters Laboratories Classifications are available. Contact Mule-Hide Warranty Department for additional information.

INSTALLATION INSTRUCTIONS

1) A proper substrate shall be provided to receive the Mule-Hide TPO-c Fleece Back Membrane Roofing System.
2) The Mule-Hide TPO-c Fleece Back membrane shall be fully adhered to the properly installed and prepared substrate using the techniques stated in Mule-Hide's specifications
3) The membrane seams shall be overlapped before being hot air welded. All welded seams must be probed.
4) The membrane is required to be mechanically attached only at the base of all vertical surfaces, roof edges, and angle changes.
5) The field of the roof is fully adhered to the substrate with Mule-Hide WBBA-2000 used as a wet lay in.
6) All details will be done in accordance with Mule-Hide details using standard TPO-c membrane.
7) On projects where a Mule-Hide Standard or Premium Warranty is requested, an authorized Mule-Hide representative shall inspect all completed work. This is only a brief summary and not the complete specification. The Mule-Hide TPO-c Fleece Back Specifications, Details, Technical Bulletins, associated documents should be thoroughly reviewed prior to starting any project.

PRECAUTIONS

- Surfaces may be slippery when wet, or due to frost and ice build-up. Exercise caution to prevent falls.
- Mule-Hide TPO membranes are highly reflective to sunlight. Workers should dress appropriately, wear sunscreen, and wear sunglasses that filter out UV light.
- Exercise care when working near roof edge. Roof edges may not be visible when surrounding area is covered with snow.
- Store Mule-Hide membrane in original wrappings in a cool, shaded area. Cover with light-colored, breathable, waterproof tarpaulins. Mule-Hide membrane that has been exposed to the elements for approximately 7 days or longer must be prepared with Weathered Membrane Cleaner prior to hot air welding.

PROTECTION & SAFETY

Mule-Hide maintains Material Safety Data Sheets on all of its products. Material Safety Data Sheets contain health and safety information for your development of appropriate product handling procedures to protect your employees and customers. Mule-Hide's Material Safety Data Sheets should be read and understood by all of your supervisory personnel and employees before using Mule-Hide products in your facilities.

MULE-HIDE TPO-c Fleece Back MEMBRANE

SUPPLEMENTAL APPROVALS, STATEMENTS AND CHARACTERISTICS

1) The fabric reinforced membrane component of Mule-Hide TPO-c Fleece Back Plus meets and exceeds the requirements of **ASTM D6878**[1] Standard Specification for Thermoplastic Polyolefin Based Sheet Roofing

2) **Radiative Properties** for ENERGY STAR®, Cool Roof Rating Council (CRRC) and LEED™

DESCRIPTION	TEST METHOD	WHITE TPO-c	TAN TPO-c	GRAY TPO-c
ENERGY STAR® initial solar reflectance	Solar Spectrum Reflectometer	0.79	0.68	N/A
ENERGY STAR® solar reflectance after 3 years	Solar Spectrum Reflectometer (uncleaned)	0.70	0.64	N/A
ENERGY STAR® initial emissivity		0.90	0.95	
CRRC initial solar reflectance	ASTM C1549	0.79	0.71	0.46
CRRC solar reflectance after 3 years	ASTM C1549 (uncleaned)	0.70	0.64	0.43
CRRC initial thermal emittance	ASTM C1371	0.90	0.86	0.89
CRRC thermal emittance after 3 years	ASTM C1371 (uncleaned)	0.86	0.87	0.88
CRRC SRI (Solar Reflectance Index)	ASTM E1980	99	86	53
CRRC SRI (Solar Reflectance Index after 3 yrs)	ASTM E1980	85	77	48
CRRC Product ID	N/A	0670-0009	0670-0016	0670-0017
LEED™ thermal emittance	ASTM E408	0.95	0.95	0.95

3) Mule-Hide tan and white TPO membranes are LEED compliant and are ENERGY STAR® and California Title 24 rated roof products.

   An ENERGY STAR qualified low slope roof product must have an initial solar reflectance of at least 0.65 and a 3-year aged solar reflectance of at least 0.50. Cleaning the aged roof surface is not permitted by the ENERGY STAR test protocol.

   The Cool Roof Rating Council (CRRC) does not specify minimums for reflectance or emittance but they do require specific protocols for testing and reporting. Cleaning of the aged roof surface is not permitted for determination of radiative properties after 3 years.

   A LEED "point" may be earned if a roof material is ENERGY STAR qualified and has a thermal emittance of at least 0.90 as determined by ASTM E408.

   Solar Reflectance Index (SRI) is calculated per ASTM E 1980. The SRI is a measure of the roof's ability to reject solar heat, as shown by a small temperature rise. It is defined so that a standard black (reflectance 0.05, emittance 0.90) is 0 and a standard white (reflectance 0.80, emittance 0.90) is 100. Materials with the highest SRI values are the coolest choices for roofing. Due to the way SRI is defined, particularly hot materials can even take slightly negative values, and particularly cool materials can even exceed 100.

   California Title 24 requires an initial minimum reflectance of 0.70 and emittance of 0.75 as determined by CRRC.

4) TPO-c membranes conform to requirements of the U.S.E.P.A. Toxic Leachate Test (40 CFR part 136) performed by an independent analytical laboratory.

5) TPO-c was tested for dynamic puncture resistance per ASTM D5635-04 using the most recently modified impact head. 45-mil was watertight after an impact energy of 12.5 J (9.2 ft-lbf) , 60-mil was watertight after an impact energy of 22.5 J (16.6 ft-lbf) and 80-mil was watertight after an impact energy of 30 J (22.1 ft-lbf)

MULE-HIDE TPO-c Fleece Back MEMBRANE

SUPPLEMENTAL APPROVALS, STATEMENTS AND CHARACTERISTICS - CONTINUED

EXTREME TESTING – HEAT AGING		
Test Method	**ASTM Requirement**	**Typical Results**
ASTM Test - 240º F (116º C), No Visible Cracks	32 Weeks	52 Weeks
Extreme Test - 275º F (135º C), No Visible Cracks	N/A	13 Weeks
Test specimen is 1" by 4" piece of 45-mil membrane unbacked, placed in circulating hot-air oven Criterion-no visible cracks after bending aged test sample around 0.25" diameter mandrel.		
Heat Aging accelerates the oxidation rate that roughly doubles for each 10º C (18º F) increase in roof membrane temperature. Oxidation (reaction with oxygen) is one of the primary chemical degradation mechanisms of roofing materials.		

EXTREME TESTING – ENVIRONMENTAL CYCLING	
Extreme Test One cycle consists of 4 series of tests	10 days heat aging at 240º F (116º C) followed by 5 days of water immersion at 158º F (70º C) or with another specimen set 5 eight-hours cycles in Kesternich sulfur dioxide chamber (sulfurous acid fog) 5040 kJ/m^2 (2000 hours @ 0.70 W/ m^2 irradiance) xenon-arc exposure
Test Criteria	After three complete cycles, test specimens shall remain flexible and not have any cracking under 10X magnification while wrapped around a 3" mandrel. Test sample is 2.75" x 5.5" piece of membrane with edges sealed.
Environmental Cycling subjects the membrane to repeated cycles of heat aging, hot-water immersion or acid fog followed by xenon-arc exposure. The acid fog accelerates acid etching that may occur from acid rain if the roof membrane is not resistant to acidic conditions.	

XENON-ARC TESTING				
	ASTM D6878 Requirement	**Typical Results 45-mil**	**Typical Results 60-mil**	**Typical Results 80-mil**
kJ/ m^2 at 340 nm	10,080	17,640	20,160	27,720
Test sample is 2.75" by 5.5" piece of membrane, unbacked, weathering side facing arc lamp. Criterion-no visible cracks viewed under 10x magnification while wrapped around 3" diameter mandrel.				
Xenon-Arc exposes the membrane samples to the combined effect of ultraviolet, visible and infrared radiation, ozone, heat and water spray, to greatly accelerate the affects of outdoor weathering. The radiation "dose" is measured in kilojoules per square meter (kJ/ m^2) at 340 nm machine UV wavelength. The irradiance "power" of the xenon-arc lamp is measured in Watts per square meter (W/m^2). Test specimen is 2.75 by 5.5 in. piece of membrane, unbacked, weathering side facing lamp. Criteria – no visible cracks viewed under 10X magnification while wrapped around a 3 in. mandrel.				

ADDITIONAL INFORMATION

The information given on this PDS is subject to change without notice. Always check the Mule-Hide website at www.mulehide.com for the latest information, changes and updates or contact Mule-Hide Products Company at 800-786-1492.

DISCLAIMER

Mule-Hide Products Co., Inc.
1195 Prince Hall Dr.
Beloit, WI 53511

PRODUCT DATA SHEET
PDS 09-1125
Revision Date: February 2012

MULE-HIDE TPO-c Fleece Back Plus MEMBRANE

PRODUCT DESCRIPTION

Mule-Hide's TPO-c Fleece Back Plus FBP-045, FBP-060 and FBP-80 Membranes are polyester reinforced, 45-mil, 60-mil, or 80-mil thick, polyolefin based thermoplastic, heat-weldable membranes with a special 10 oz / $yd^{2,}$ stain resistant, polyester fleece backing designed for attachment with hot asphalt. .

BASIC USES

The TPO-c Fleece Back Plus membrane is used in fully adhered roofing systems in new construction, reroofing and recover (retrofit) applications, where the roof membrane is adhered with hot asphalt. The system must be installed over an acceptable roof insulation or other suitable substrate. See the Mule-Hide TPO Fleece Back PLUS Specifications Manual for complete specifications and details.

SPECIFICATIONS

Colors: White top/White bottom Standard - Special Order Top Colors Tan and Gray
Material: 45-mil (FBP-45), 60-mil (FBP-60) and 80-mil (FBP-80) (nominal) thick polyester reinforced thermoplastic
FBP-045 = 120 mils total thickness, FBP-60 = 135 mils total thickness, FMP-80 = 155 mils total thickness

Physical Properties	Test Method	Specification (min.)	Mule-Hide TPO
Tolerance on Nominal Thickness, %	ASTM D751	± -10	± -10
Thickness over fleece FBP-45 (120 mils total) FBP-60 (135 mils total) FBP-80 (155 mils total)	ASTM D4637	 0.030 inch (.762 mm) 0.045 inch (1.14 mm) 0.080 inch (2.03 mm)	 0.045 inch (1.14 mm) 0.060 inch (1.52 mm) 0.080 inch (2.03 mm)
Weight FBP-45 (120 mils total) FBP-60 (135 mils total) FBP-80 (155 mils total)	 --- --- ---	 --- --- ---	 0.27 lbm/ft^2 0.34 lbm/ft^2 0.44 lbm/ft^2
Breaking Strength FBP-45 (120 mils total) FBP-60 (135 mils total) FBP-80 (155 mils total)	 ASTM D-751 (Grab Method)	 90 lb (0.4 kN)	 300 lb (1.3 kN) 400 lb (1.8 kN) 425 lb (1.9 kN)
Elongation at break of internal fabric	ASTM D-751	---	25% typical
Tearing Strength, B Tongue Tear	ASTM D-751	10 lb (45 kN)	55 lb (245 kN)
Brittleness point	ASTM D-2137	-40 F° (-40 C°) max.	-50 F° (-46 C°)
Linear Dimensional Change	ASTM D-1204	+/- 1.0% max	-0.2% typical
Ozone resistance, 100 pphm, 168 hours	ASTM D-1149	No cracks	No cracks
Resistance to water absorption After 7 days immersion 158ºF (70ºC) Change in mass, %	ASTM D-471 (fleece removed, edges sealed)	+ 4.0%	+2.0%
Resistance to microbial surface growth, rating (1 is very poor, 10 is no growth)	ASTM D-3274	---	9-10 typical
Field seam strength, seam tested in peel FBP-45 (120 mils total) FBP-60 (135 mils total) FBP-80 (155 mils total)	 ASTM D-1876	 25 lbf/in (4.4 kN/m) 25 lbf/in (4.4 kN/m) 40 lbf/in (7.0 kN/m)	 40 lbf/in (7.4 kN/m) 60 lbf/in (10.5 kN/m) 70 lbf/in (12.3 kN/m)
Water vapor permeance, Proc B	ASTM E-96	---	0.10 perms max 0.05 perms typical
Puncture resistance FBP-45 (120 mils total) FBP-60 (135 mils total) FBP-80 (155 mils total)	FTM 101C Method 2031 (lbf) ASTM D5635 (Joules)	 350 lbf (--- Joules) 400 lbf (--- Joules) 425 lbf (--- Joules)	 450 lbf (17.5 Joules) 500 lb (22.5 Joules) 525 lb (30.0 Joules)
Resistance to Outdoor (UV) Weathering Xenon-Arc, 0.70 W/m^2 irradiance exposure FBP-45 (120 mils total) FBP-60 (135 mils total) FBP-80 (155 mils total)	ASTM G155 0.70 W/m^2 80ºC B.P.T.	No cracks No loss of breaking or tearing strength	No cracks No loss of breaking or tearing strength 17,640 kg/m^2 20,160 kg/m^2 27,720 kg/m^2
Properties after heat aging Breaking Strength - % retained Elongation Reinforced - % retained Tearing Strength - % retained Weight Change -%	ASTM D573 670 hrs @ 240 ºF	 --- --- --- ---	 90% min 90% min 60% min ± 1.0 min

MULE-HIDE TPO-c Fleece Back Plus MEMBRANE

BENEFITS & SUPPLEMENTAL STATEMENTS

- Wide window of weldability
- Thick 10 oz / yd^2 stain resistance fleece specifically designed for use with hot asphalt
- 75% fewer seams than modified - bitumen systems
- Outstanding puncture resistance which is enhanced further by the fleece backing
- Chlorine-free with no halogenated flame retardants
- Excellent low temperature impact resistance
- Excellent chemical resistance to acids, bases, restaurant oils and greases
- Plasticizer-free. Does not contain liquid or polymeric plasticizer
- Exceptional resistance to solar UV, ozone and oxidation
- Hot melt extrusion processed for complete scrim encapsulation
- Warp knitted fabric (not woven) for smooth surface and greater thickness-over-scrim
- Low vapor permeance and water absorption
- Polyester reinforcing fabric and fleece backing which are resistant to degradation by bacteria, mildew and fungi
- Polyester fleece backing for fully adhered systems provided exceptional wind uplift resistance
- TPO-c Fleece Back is 100% recyclable

CODE APPROVALS/COMPLIANCE

A variety of Factory Mutual Ratings and Underwriters Laboratories Classifications are available. Contact Mule-Hide Warranty Department for additional information.

INSTALLATION INSTRUCTIONS

1) A proper substrate shall be provided to receive the Mule-Hide TPO-c Fleece Back Membrane Roofing System.
2) The Mule-Hide TPO-c Fleece Back membrane shall be fully adhered to the properly installed and prepared substrate using the techniques stated in Mule-Hide's specifications
3) The membrane side laps shall be overlapped before being hot air welded. All seams are to be hot air welded and probed.
4) The membrane is required to be mechanically attached only at the base of all vertical surfaces, roof edges, and angle changes.
5) The field of the roof is fully adhered to the substrate with hot asphalt applied at EVT.
6) All details will be done in accordance with Mule-Hide details use standard TPO-c membrane.
7) On projects where a Mule-Hide Standard or Premium Warranty is requested, an authorized Mule-Hide representative shall inspect all completed work. This is only a brief summary and not the complete specification. The Mule-Hide TPO-c Fleece Back Plus Specifications, Details, Technical Bulletins, associated documents should be thoroughly reviewed prior to starting any project.

PRECAUTIONS

- Surfaces may be slippery when wet, or due to frost and ice build-up. Exercise caution to prevent falls.
- Mule-Hide TPO membranes are highly reflective to sunlight. Workers should dress appropriately, wear sunscreen, and wear sunglasses that filter out UV light.
- Exercise care when working near roof edge. Roof edges may not be visible when surrounding area is covered with snow.
- Store Mule-Hide membrane in original wrappings in a cool, shaded area. Cover with light-colored, breathable, waterproof tarpaulins. Mule-Hide membrane that has been exposed to the elements for approximately 7 days or longer must be prepared with Weathered Membrane Cleaner prior to hot air welding.

MULE-HIDE TPO-c Fleece Back Plus MEMBRANE

PROTECTION & SAFETY

Mule-Hide maintains Material Safety Data Sheets on all of its products. Material Safety Data Sheets contain health and safety information for your development of appropriate product handling procedures to protect your employees and customers. Mule-Hide's Material Safety Data Sheets should be read and understood by all of your supervisory personnel and employees before using Mule-Hide products in your facilities.

SUPPLEMENTAL APPROVALS, STATEMENTS AND CHARACTERISTICS

1) The fabric reinforced membrane component of Mule-Hide TPO-c Fleece Back Plus meets and exceeds the requirements of **ASTM D6878**[1] Standard Specification for Thermoplastic Polyolefin Based Sheet Roofing

2) **Radiative Properties** for ENERGY STAR®, Cool Roof Rating Council (CRRC) and LEED™

DESCRIPTION	TEST METHOD	WHITE TPO-c	TAN TPO-c	GRAY TPO-c
ENERGY STAR® initial solar reflectance	Solar Spectrum Reflectometer	0.79	0.68	N/A
ENERGY STAR® solar reflectance after 3 years	Solar Spectrum Reflectometer (uncleaned)	0.70	0.64	N/A
ENERGY STAR® initial emissivity		0.90	.95	
CRRC initial solar reflectance	ASTM C1549	0.79	0.71	0.46
CRRC solar reflectance after 3 years	ASTM C1549 (uncleaned)	0.70	0.64	0.43
CRRC initial thermal emittance	ASTM C1371	0.90	0.86	0.89
CRRC thermal emittance after 3 years	ASTM C1371 (uncleaned)	0.86	0.87	0.88
CRRC SRI (Solar Reflectance Index)	ASTM E1980	99	86	53
CRRC SRI (Solar Reflectance Index after 3 yrs)	ASTM E1980	85	77	48
CRRC Product ID	N/A	0670-0009	0670-0016	0670-0017
LEED™ thermal emittance	ASTM E408	0.95	0.95	0.95

3) Mule-Hide tan and white TPO membranes are LEED compliant and are ENERGY STAR® and California Title 24 rated roof products.

   An ENERGY STAR qualified low slope roof product must have an initial solar reflectance of at least 0.65 and a 3-year aged solar reflectance of at least 0.50. Cleaning the aged roof surface is permitted by the ENERGY STAR test protocol. Energy Star is only valid in the United States for Roofing Products.

   The Cool Roof Rating Council (CRRC) does not specify minimums for reflectance or emittance but they do require specific protocols for testing and reporting. Cleaning of the aged roof surface is not permitted for determination of radiative properties after 3 years.

   A LEED “point” may be earned if a roof material is ENERGY STAR qualified and has a thermal emittance of at least 0.90 as determined by ASTM E408.

   Solar Reflectance Index (SRI) is calculated per ASTM E 1980. The SRI is a measure of the roof's ability to reject solar heat, as shown by a small temperature rise. It is defined so that a standard black (reflectance 0.05, emittance 0.90) is 0 and a standard white (reflectance 0.80, emittance 0.90) is 100. Materials with the highest SRI values are the coolest choices for roofing. Due to the way SRI is defined, particularly hot materials can even take slightly negative values, and particularly cool materials can even exceed 100.

   California Title 24 requires an initial minimum reflectance of 0.70 and emittance of 0.75 as determined by CRRC.

4) TPO-c membranes conform to requirements of the U.S.E.P.A. Toxic Leachate Test (40 CFR part 136) performed by an independent analytical laboratory.

MULE-HIDE TPO-c Fleece Back Plus MEMBRANE

SUPPLEMENTAL APPROVALS, STATEMENTS AND CHARACTERISTICS - CONTINUED

5) TPO-c was tested for dynamic puncture resistance per ASTM D5635-04 using the most recently modified impact head. 45-mil was watertight after an impact energy of 12.5 J (9.2 ft-lbf), 60-mil was watertight after an impact energy of 22.5 J (16.6 ft-lbf) and 80-mil was watertight after an impact energy of 30 J (22.1 ft-lbf)

EXTREME TESTING – HEAT AGING		
Test Method	**ASTM Requirement**	**Typical Results**
ASTM Test - 240º F (116º C), No Visible Cracks	32 Weeks	52 Weeks
Extreme Test - 275º F (135º C), No Visible Cracks	N/A	13 Weeks
Test specimen is 1” by 4” piece of 45-mil membrane unbacked, placed in circulating hot-air oven Criterion-no visible cracks after bending aged test sample around 0.25” diameter mandrel.		
Heat Aging accelerates the oxidation rate that roughly doubles for each 10º C (18º F) increase in roof membrane temperature. Oxidation (reaction with oxygen) is one of the primary chemical degradation mechanisms of roofing materials.		

EXTREME TESTING – ENVIRONMENTAL CYCLING	
Extreme Test One cycle consists of 4 series of tests	10 days heat aging at 240º F (116º C) followed by 5 days of water immersion at 158º F (70º C) or with another specimen set 5 eight-hours cycles in Kesternich sulfur dioxide chamber (sulfurous acid fog) 5040 kJ/m^2 (2000 hours @ 0.70 W/ m^2 irradiance) xenon-arc exposure
Test Criteria	After three complete cycles, test specimens shall remain flexible and not have any cracking under 10X magnification while wrapped around a 3” mandrel. Test sample is 2.75” x 5.5” piece of membrane with edges sealed.
Environmental Cycling subjects the membrane to repeated cycles of heat aging, hot-water immersion or acid fog followed by xenon-arc exposure. The acid fog accelerates acid etching that may occur from acid rain if the roof membrane is not resistant to acidic conditions.	

XENON-ARC TESTING				
	ASTM D6878 Requirement	**Typical Results 45-mil**	**Typical Results 60-mil**	**Typical Results 80-mil**
kJ/ m^2 at 340 nm	10,080	17,640	20,160	27,720
Test sample is 2.75” by 5.5” piece of membrane, unbacked, weathering side facing arc lamp. Criterion-no visible cracks viewed under 10x magnification while wrapped around 3” diameter mandrel.				
Xenon-Arc exposes the membrane samples to the combined effect of ultraviolet, visible and infrared radiation, ozone, heat and water spray, to greatly accelerate the affects of outdoor weathering. The radiation “dose” is measured in kilojoules per square meter (kJ/ m^2) at 340 nm machine UV wavelength. The irradiance “power” of the xenon-arc lamp is measured in Watts per square meter (W/m^2). Test specimen is 2.75 by 5.5 in. piece of membrane, unbacked, weathering side facing lamp. Criteria – no visible cracks viewed under 10X magnification while wrapped around a 3 in. mandrel.				

ADDITIONAL INFORMATION

The information given on this PDS is subject to change without notice. Always check the Mule-Hide website at www.mulehide.com for the latest information, changes and updates or contact Mule-Hide Products Company at 800-786-1492.

DISCLAIMER

The statements provided concerning the material shown are intended as a guide for material usage and are believed to be true and accurate at the time of printing. No statement made by anyone may supersede this information, except when done in writing by Mule-Hide Products Co., Inc. Since the manner of use is beyond our control, Mule-Hide does not authorize anyone to make any warranty of merchantability or fitness for any particular purpose or any other warranty, guarantee or representation, expressed or implied, concerning this material. This product may be eligible for a Mule-Hide warranty, please check the Mule-Hide website at www.mulehide.com or contact Mule-Hide directly at 800-786-1492 for details. Buyer and user accept the product under these conditions and assume the risk of any failure, any injury person or property (including that of the user), loss or liability resulting from the handling, storage or use of the product whether or not it is handled, stored or used in accordance with the directions or specifications. Mule-Hide must be notified in writing of any claims and be given the opportunity to inspect the alleged failure before repairs are made.

Mule-Hide Products Co., Inc.
1195 Prince Hall Dr.
Beloit, WI 53511

MULE-HIDE SA-TPO
(Self-Adhering TPO)

PRODUCT DESCRIPTION

Mule-Hide's SA-TPO Membrane is a polyester reinforced .060 thick, thermoplastic polyolefin based sheet laminated to an elastomeric pressure-sensitive adhesive film. The Mule-Hide SA-TPO is a combination of ethylene –propylene (EP) and polypropylene designed for weatherability and heat weldability when used in Mule-Hide's SA-TPO fully adhered roofing system. The membrane is environmentally friendly and installs with the VOC free adhesive film and heat welded seams.

ADHESIVE FILM

The adhesive film is a 100% solids hot melt, which virtually eliminates VOC and odor problems associated in other fully adhered systems. The adhesive is factory applied to ensure an even thickness for consistent installation performance. One edge of the membrane is un-coated to allow for heat-welding of field seams. A silicon coated release liner is used to provide an easy release from the adhesive.

SPECIFICATIONS

Colors: White top/Adhesive film bottom (Standard)
Material: .060-inch (nominal) thick polyester reinforced thermoplastic
Sizes: 10' wide by 50' or 100' in length

Physical Properties	Test Method	Typical Values Unaged Sheet	Property after ASTM D-573 aging[1] 28 days @ 240ºF
Nominal Thickness with adhesive. In (mm)	ASTM D-751	0.070 (1.78)	
Thickness over scrim, in. (mm) 60 – mil	ASTM D-6878 Optical Method (avg. of 3 areas)	0.024 (0.610) ±10%	
Breaking Strength, lbf (kN)	ASTM D-751 (Grab Method)	250 (1.1) min. 360 (1.6) min.	250 (1.1) min. 360 (1.6)
Elongation at break of fabric	ASTM D-751	25 typical	25 typical
Tear Strength, lbf (N) 8 by 8 in. specimen	ASTM D-751 (B Tongue Tear)	55 (245) min. 130 (578) typical	55 (245) min. 130 (578) typical
Brittleness point, Fº (Cº)	ASTM D-2137	-40 (-40) max. -50 (-46) typical	
Linear Dimensional Change (shrinkage), % after 6 hours@158º F (70º C)	ASTM D-1204	+/- 0.5 max - 0.2 typical	
Ozone resistance, 100 pphm, 168 hours	ASTM D-1149	No cracks	No cracks
Resistance to water absorption After 7 days immersion 158ºF (70ºC) Change in mass, %	ASTM D-471	3.0 max. 2.0 typical	
Resistance to microbial surface growth, rating (1 is very poor, 10 is no growth)	ASTM D-3274 2-yrs. Florida	9-10 typical	
Field seam strength, lbf/in. (kN/m) Seams tested in peel	ASTM D-1876	25 (4.4) min. 60 (10.5) typical	
Water vapor permeance, Perms	ASTM E-96	0.10 max. 0.05 typical	
Puncture resistance, lbf (N)	FTM 101C Method 2031	300 (1.3) min. 60-mil 350 (1.6) typical 60-mil	
Resistance to xenon-arc weathering[2] Xenon-Arc, 17,640 kj/m^2 total radiant exposure, visual condition at 10X	ASTM G-155 0.70 W/m^2 80ºC B.P.T.	No cracks No loss of breaking or tearing strength	

[1] Aging conditions are 28 days at 240ºF (116º C) equivalent to 400 days at 176ºF (80ºC) for breaking strength, elongation, tear strength, ozone and puncture resistance
[2] Approximately equivalent to 14,000 hour exposure at 0.35 W/m^2 irradiance B.P.T. is black panel temperature

Typical properties and characteristics are based on samples tested and are not guaranteed for all samples of this product. This data and information is intended as a guide and does not reflect the specification range for any particular property of this product.

MULE-HIDE SA-TPO
(Self-Adhering TPO)

BENEFITS & SUPPLEMENTAL STATEMENTS

- ENERGY STAR-qualified and Title 24-compliant
- FM, UL and CRRC rated.
- Pressure sensitive adhesive provides superior bonding to approved substrates
- Self Adhering technology results in labor savings of up to 80%
- No solvents, VOC's or odors with self adhering technology
- Double sided release liner
- Smooth membrane surface reduces dirt buildup allowing membrane to remain cleaner, longer
- Exceptional resistance to solar UV, ozone and oxidation
- Low vapor permeance and water absorption
- Polyester reinforcing fabric which is resistant to degradation by bacteria, mildew and fungi
- TPO is 100% recyclable

CODE APPROVALS/COMPLIANCE

A variety of Factory Mutual Ratings and Underwriters Laboratories Classifications are available. Contact Mule-Hide Warranty Department for additional information.

INSTALLATION INSTRUCTIONS

Mule-Hide SA-TPO are approved for application directly over approved substrates, including:

Mule-Hide Polyiso roof insulation
Dens Deck Prime
Securock Gypsum-Fiber Roof Board
APA rated OSB and Plywood
Metal and Clean concrete block

Membrane Installation

1. Approved insulation shall be attached to the roof deck with an approved insulation adhesive or approved fasteners and plates. Install insulation with its largest dimension perpendicular to the direction of the membrane seams where possible.
2. Minimum installation temperature for the Mule-Hide SA-TPO is 50ºF.
3. Substrate must be thoroughly cleaned prior to application of membrane. Remove all dust and foreign material using a fine push broom or blower.

   Note: Priming of the insulation surface is not required.

4. Position sheet in place with proper seam overlap and allow to relax. Position seams to allow water to flow over them.
5. Remove the release liner of one half of the sheet starting with the split in the center of the liner. Remove liner at a 45º angle to reduce splitting or tearing.
6. Roll membrane onto the substrate while avoiding wrinkles. To achieve the best adhesion, membrane should be rolled at and angle. When installing membrane, maintain a large curve on the leading edge. This will help to avoid creases and bubbles in the membrane. Bubbles and creases built into the membrane cannot be removed.
7. Using a minimum 75 pound, segmented roller, roll entire surface of membrane to ensure contact and to promote adhesion.
8. Fold back remaining half of sheet and repeat process.

Heat Welding

1. Refer to System Specification for general heat welding guidelines.
2. Membrane has an uncoated edge along one (long) side of the membrane for heat welding. Adjoining sheets are overlapped a minimum of 2" to provide room for minimum 1 ½" wide heat weld. All seams are to be shingled to avoid bucking of water.

MULE-HIDE SA-TPO
(Self-Adhering TPO)

INSTALLATION INSTRUCTIONS (Continued)

3. At the ends of the rolls, the sheets are butted together and overlaid with a 6" wide strip of standard reinforced membrane that is hot-air welded along all edges. Seal all cut edges of membrane with cut-edge sealant.
4. On projects where a Mule-Hide Standard or Premium Warranty is requested, an authorized Mule-Hide representative shall inspect all completed work. This is only a brief summary and not the complete specification. The Mule-Hide Specifications, Details, Technical Bulletins, and associated documents should be thoroughly reviewed prior to starting any project. Contact Mule-Hide Products for additional information.

Wall Flashings

Walls may be flashed with either standard TPO membrane and TPO Bonding Adhesive or SA-TPO membrane.

Contact Mule-Hide Technical Department for specific installation details.

LEED Information

LEED Information	
Pre-consumer Recycled Content	8%
Post-consumer Recycled Content	0%
Manufacturing Location	Tooele, UT
Solar Reflectance Index (SRI)	99

PRECAUTIONS

- Static charges may be developed as poly release liner is removed from back of membrane sheet. Keep lids tightly closed on flammable products and maintain a fully charged fire extinguisher on site for safety.
- Surfaces may be slippery when wet, or due to frost and ice build-up. Exercise caution to prevent falls.
- Mule-Hide TPO membranes are highly reflective to sunlight. Workers should dress appropriately, wear sunscreen, and wear sunglasses that filter out UV light.
- Exercise care when working near roof edge. Roof edges may not be visible when surrounding area is covered with snow.
- Store Mule-Hide membrane in original wrappings in a cool, shaded area. Cover with light-colored, breathable, waterproof tarpaulins. Mule-Hide membrane that has been exposed to the elements for approximately 7 days or longer must be prepared with Weathered Membrane Cleaner prior to hot air welding.

PROTECTION & SAFETY

Mule-Hide maintains Material Safety Data Sheets on all of its products. Material Safety Data Sheets contain health and safety information for your development of appropriate product handling procedures to protect your employees and customers. Mule-Hide's Material Safety Data Sheets should be read and understood by all of your supervisory personnel and employees before using Mule-Hide products in your facilities.

MULE-HIDE SA-TPO
(Self-Adhering TPO)

SUPPLEMENTAL APPROVALS, STATEMENTS AND CHARACTERISTICS

1) Radiative Properties for ENERGY STAR®, Cool Roof Rating Council (CRRC) and LEED™

DESCRIPTION	TEST METHOD	WHITE TPO-c
ENERGY STAR® initial solar reflectance	Solar Spectrum Reflectometer	0.79
ENERGY STAR® solar reflectance after 3 years	Solar Spectrum Reflectometer (uncleaned)	0.70
ENERGY STAR® initial emissivity		0.90
CRRC initial solar reflectance	ASTM C1549	0.79
CRRC solar reflectance after 3 years	ASTM C1549 (uncleaned)	0.70
CRRC initial thermal emittance	ASTM C1371	0.90
CRRC thermal emittance after 3 years	ASTM C1371 (uncleaned)	0.86
CRRC SRI (Solar Reflectance Index)	ASTM E1980	99
CRRC SRI (Solar Reflectance Index after 3 yrs)	ASTM E1980	85
CRRC Product ID	N/A	0670-0009
LEED™ thermal emittance	ASTM E408	0.95

2) SA-TPO meets and exceeds the requirements of **ASTM D6878**[1] Standard Specification for Thermoplastic Polyolefin Based Sheet Roofing.

3) Mule-Hide white TPO membranes are LEED compliant and are ENERGY STAR® and California Title 24 rated roof products.

   An ENERGY STAR qualified low slope roof product must have an initial solar reflectance of at least 0.65 and a 3-year aged solar reflectance of at least 0.50. Cleaning the aged roof surface is not permitted by the ENERGY STAR test protocol. Energy Star is only valid in the United States for Roofing Products.

   The Cool Roof Rating Council (CRRC) does not specify minimums for reflectance or emittance but they do require specific protocols for testing and reporting. Cleaning of the aged roof surface is not permitted for determination of radiative properties after 3 years.

   A LEED "point" may be earned if a roof material is ENERGY STAR qualified and has a thermal emittance of at least 0.90 as determined by ASTM E408.

   Solar Reflectance Index (SRI) is calculated per ASTM E 1980. The SRI is a measure of the roof's ability to reject solar heat, as shown by a small temperature rise. It is defined so that a standard black (reflectance 0.05, emittance 0.90) is 0 and a standard white (reflectance 0.80, emittance 0.90) is 100. Materials with the highest SRI values are the coolest choices for roofing. Due to the way SRI is defined, particularly hot materials can even take slightly negative values, and particularly cool materials can even exceed 100.

   California Title 24 requires an initial minimum reflectance of 0.70 and emittance of 0.75 as determined by CRRC.

4) TPO-c membranes conform to requirements of the U.S.E.P.A. Toxic Leachate Test (40 CFR part 136) performed by an independent analytical laboratory.

5) TPO-c was tested for dynamic puncture resistance per ASTM D5635-04 using the most recently modified impact head. 45-mil was watertight after an impact energy of 12.5 J (9.2 ft-lbf) and 60-mil was watertight after an impact energy of 22.5 J (16.6 ft-lbf)

MULE-HIDE SA-TPO
(Self-Adhering TPO)

SUPPLEMENTAL APPROVALS, STATEMENTS AND CHARACTERISTICS - CONTINUED

EXTREME TESTING – HEAT AGING		
Test Method	**ASTM Requirement**	**Typical Results**
ASTM Test - 240º F (116º C), No Visible Cracks	32 Weeks	52 Weeks
Extreme Test - 275º F (135º C), No Visible Cracks	N/A	13 Weeks
Test specimen is 1” by 4” piece of 45-mil membrane unbacked, placed in circulating hot-air oven Criterion-no visible cracks after bending aged test sample around 0.25” diameter mandrel.		
Heat Aging accelerates the oxidation rate that roughly doubles for each 10º C (18º F) increase in roof membrane temperature. Oxidation (reaction with oxygen) is one of the primary chemical degradation mechanisms of roofing materials.		

EXTREME TESTING – ENVIRONMENTAL CYCLING	
Extreme Test One cycle consists of 4 series of tests	10 days heat aging at 240º F (116º C) followed by 5 days of water immersion at 158º F (70º C) or with another specimen set 5 eight-hours cycles in Kesternich sulfur dioxide chamber (sulfurous acid fog) 5040 kJ/m^2 (2000 hours @ 0.70 W/ m^2 irradiance) xenon-arc exposure
Test Criteria	After three complete cycles, test specimens shall remain flexible and not have any cracking under 10X magnification while wrapped around a 3” mandrel. Test sample is 2.75” x 5.5” piece of membrane with edges sealed.
Environmental Cycling subjects the membrane to repeated cycles of heat aging, hot-water immersion or acid fog followed by xenon-arc exposure. The acid fog accelerates acid etching that may occur from acid rain if the roof membrane is not resistant to acidic conditions.	

XENON-ARC TESTING				
	ASTM D6878 Requirement	**Typical Results 45-mil**	**Typical Results 60-mil**	**Typical Results 80-mil**
kJ/ m^2 at 340 nm	10,080	17,640	20,160	27,720
Test sample is 2.75” by 5.5” piece of membrane, unbacked, weathering side facing arc lamp. Criterion-no visible cracks viewed under 10x magnification while wrapped around 3” diameter mandrel.				
Xenon-Arc exposes the membrane samples to the combined effect of ultraviolet, visible and infrared radiation, ozone, heat and water spray, to greatly accelerate the affects of outdoor weathering. The radiation “dose” is measured in kilojoules per square meter (kJ/ m^2) at 340 nm machine UV wavelength. The irradiance “power” of the xenon-arc lamp is measured in Watts per square meter (W/m^2). Test specimen is 2.75 by 5.5 in. piece of membrane, unbacked, weathering side facing lamp. Criteria – no visible cracks viewed under 10X magnification while wrapped around a 3 in. mandrel.				

ADDITIONAL INFORMATION

The information given on this PDS is subject to change without notice. Always check the Mule-Hide website at www.mulehide.com for the latest information, changes and updates or contact Mule-Hide Products Company at 800-786-1492.

DISCLAIMER

The statements provided concerning the material shown are intended as a guide for material usage and are believed to be true and accurate at the time of printing. No statement made by anyone may supersede this information, except when done in writing by Mule-Hide Products Co., Inc. Since the manner of use is beyond our control, Mule-Hide does not authorize anyone to make any warranty of merchantability or fitness for any particular purpose or any other warranty, guarantee or representation, expressed or implied, concerning this material. This product may be eligible for a Mule-Hide warranty, please check the Mule-Hide website at www.mulehide.com or contact Mule-Hide directly at 800-786-1492 for details. Buyer and user accept the product under these conditions and assume the risk of any failure, any injury person or property (including that of the user), loss or liability resulting from the handling, storage or use of the product whether or not it is handled, stored or used in accordance with the directions or specifications. Mule-Hide must be notified in writing of any claims and be given the opportunity to inspect the alleged failure before repairs are made.

Mule-Hide Products Co., Inc.
1195 Prince Hall Dr.
Beloit, WI 53511

UNIVERSAL SINGLE-PLY SEALANT

PRODUCT DESCRIPTION

A 100% solids, solvent free, one-part, polyether sealant that provides a weather tight seal to a variety of building substrates. Provides excellent adhesive to substrates such as stone, masonry, ceramic, marble, wood, steel, aluminum, most plastics and composites. Not recommended as a glass-glazing sealant.

BASIC USES

Universal Single-Ply Sealant can be used as a:

- Lap-sealant for White-on-Black EPDM roofing systems
- Sealant for All-Purpose Bar on EPDM, TPO, and PVC systems
- Sealant for counter flashings, copings, and scupper details

TYPICAL PHYSICAL PROPERTIES

Typical Properties and Characteristics	
Viscosity	850,000 Cps
Tack Free Time	35 minutes depending upon temperature
Cure Time	3-7 days depending upon temperature
Flow, Sag or Sump	None (1/4" bead)
Staining	None
Ozone Resistance	Good
UV Resistance	Excellent
Cured Hardness (Shore A)	17 - 23
Shear Strength	150 PSI
Color	White
Typical properties and characteristics are based on samples tested and are not guaranteed for all samples of this product. This data and information is intended as a guide and does not reflect the specification or specification range for any particular property of this product.	

PACKAGING

Packaging	
Weight per Carton	26 lbs
Packaging	24 tubes, 10.1 fluid oz. each (per carton)
Shelf Life	12 months (unopened tube @ 90° F

BENEFITS & SUPPLEMENTAL STATEMENTS

Excellent adhesion to various substrates
VOC free
Versatile applications

COVERAGE RATES

25 feet (7.6 m) per tube or 600 feet (183 m) using a 0.250 " (6 mm) bead

INSTALLATION TEMPERATURE

Do not install in temperatures below 40° F

UNIVERSAL SINGLE-PLY SEALANT

INSTALLATION INSTRUCTIONS

1. Universal Single-Ply Sealant is a one-component, ready-to-use material that requires no mixing or preparation.
2. Surface Preparation - Surfaces shall be dry, clean and free of all dust, or contamination, which may harmfully affect the adhesion of the sealant. Cleaning with Weathered Membrane Cleaner may be required.
3. A quality caulking gun should be used to ensure ease of application.
4. Universal Single-Ply Sealant typically is tack free in 25 minutes and skins over within 45 minutes. Full cure occurs in 3 to 7 days depending on temperature and humidity.
5. Clean Up - Remove excess sealant adjacent to joint prior to curing with our Weathered Membrane Cleaner. Uncured sealant can also be removed from tools or equipment with our Weathered Membrane Cleaner.

PRECAUTIONS

1. Avoid prolonged contact with skin. Uncured adhesive irritates eyes. In case of contact with eyes, immediately flush with water. Consult a physician if ill effects occur.
2. Store in original unopened containers in a cool, dry area. Protect unopened containers from heat and direct sunlight. Elevated temperatures will reduce shelf life.
3. KEEP OUT OF THE REACH OF CHILDREN.
4. For industrial professional use only. May not be repackaged or resold for other than industrial or professional use.
5. See Material Safety Data Sheet for complete safety information before using product.
6. Do not use Universal Single-Ply Sealant in temperatures below 40 degrees F.

PROTECTION & SAFETY

Mule-Hide maintains Material Safety Data Sheets on all of its products. Material Safety Data Sheets contain health and safety information for your development of appropriate product handling procedures to protect your employees and customers. Mule-Hide's Material Safety Data Sheets should be read and understood by all of your supervisory personnel and employees before using Mule-Hide products in your facilities.

ADDITIONAL INFORMATION

The information given on this PDS is subject to change without notice. Always check the Mule-Hide website at www.mulehide.com for the latest information, changes and updates or contact Mule-Hide Products Company at 800-786-1492.

DISCLAIMER

Mule-Hide Products Co., Inc.
1195 Prince Hall Dr.
Beloit, WI 53511

PRODUCT DATA SHEET
PDS 09-2110
Revision Date: Jan-2014

MULE-HIDE WATER CUT-OFF

PRODUCT DESCRIPTION

Mule-Hide Water Cut-Off is a one-part, low viscosity, self-wetting, butyl-blend mastic designed for sealing Mule-Hide membranes to wood, concrete, metal, plastic and other substrates. This product is an extremely tacky material and will remain so when used with a compression –type seal.

BASIC USES

Mule-Hide Water Cut-Off can be used to seal roofing membranes to stop water penetration into the roofing system. Common uses are at drain terminations and behind Mule-Hide's All Purpose Bars at wall terminations

TYPICAL PHYSICAL PROPERTIES

Typical Properties and Characteristics	
Color	Gray
Solids	80%
Flash Point	40ºF (4ºC) Closed Cup
Service Temperature	-40ºF to 200ºF (-40ºC to 93ºC)
Specific Gravity	1.29
Cold Weather Flexibility	Good
Average Brookfield Viscosity	1,320,000 cps
Typical properties and characteristics are based on samples tested and are not guaranteed for all samples of this product. This data and information is intended as a guide and does not reflect the specification or specification range for any particular property of this product.	

LEED Information	
Pre-consumer Recycled Content	0%
Post-consumer Recycled Content	0%
Manufacturing Location	Carlisle, PA
VOC Content	250 g/L

Packaging
Weight Per Carton – 28 lbs
Packaging – 25 tubes / carton
Shelf Life (un-opened tube) – 1 year

BENEFITS & SUPPLEMENTAL STATEMENTS

Excellent adhesion to various substrates
Provides a durable compression type seal
Versatile applications

COVERAGE RATES

Approximately 10 lineal feet per using a ½" diameter bead

INSTALLATION INSTRUCTIONS

1. Mule-Hide Water Cut-Off is a one-component, ready-to-use material that requires no mixing or preparation.
2. Surface Preparation - Surfaces shall be dry, clean and free of all dust, or contamination, which may harmfully affect the adhesion of the sealant. Cleaning with Weathered Membrane Cleaner may be required.
3. A quality caulking gun should be used to ensure ease of application.
4. Apply a ½" diameter bead of Mule-Hide Water Cut-Off between the substrate and the edge of the membrane. The membrane must cover the mastic.
4. Install appropriate termination detail and secure to provide constant compression for the Mule-Hide

MULE-HIDE WATER CUT-OFF

Water Cut-Off. Follow Mule-Hide's Specification Manual and Details for appropriate methods of termination.

CLEAN UP

1. Clean Up - Remove excess Water Cut-Off with our Weathered Membrane Cleaner. Water Cut-Off can also be removed from tools or equipment with our Weathered Membrane Cleaner.

PRECAUTIONS

1. See Material Safety Data Sheet for complete safety information before using product.
2. Water Cut-Off is FLAMMABLE – contains solvents that area dangerous fire and explosion hazards when exposed to heat, flame or sparks. Store and use away from all sources of heat, flame or sparks. Do not smoke while applying. Do not use in a confined or unventilated area. Vapors are heavier than air and may travel along ground to a distant ignition source and flash back
3. Avoid breathing vapors. Keep container closed when not in use. Use with adequate ventilation. If inhaled, remove to fresh air. If not breathing, perform artificial respiration. If breathing is difficult, give oxygen. Call a physician immediately.
4. If swallowed, DO NOT INDUCE VOMITING. Call a physician immediately.
5. Avoid contact with eyes. Safety glasses or goggles are recommended. If splashed in eyes, immediately flush eyes with plenty of clean water for at least 15 minutes. Contact a physician immediately.
6. Avoid contact with skin. Wash hands thoroughly after handling. In case of contact with skin, thoroughly wash affected area with soap and water.

   Note: Permeation-resistant gloves (that meet ANSI/ISEA 105-2005) are recommended to be worn when using this product to protect hands from irritating ingredients.

PROTECTION & SAFETY

Mule-Hide maintains Material Safety Data Sheets on all of its products. Material Safety Data Sheets contain health and safety information for your development of appropriate product handling procedures to protect your employees and customers. Mule-Hide's Material Safety Data Sheets should be read and understood by all of your supervisory personnel and employees before using Mule-Hide products in your facilities.

ADDITIONAL INFORMATION

The information given on this PDS is subject to change without notice. Always check the Mule-Hide website at www.mulehide.com for the latest information, changes and updates or contact Mule-Hide Products Company at 800-786-1492.

DISCLAIMER

Mule-Hide Products Co., Inc.
1195 Prince Hall Dr.
Beloit, WI 53511

PRODUCT DATA SHEET
PDS 09-2205
Revision Date: FEB-2014

MULE-HIDE THERMOPLASTIC ONE-PART POURABLE SEALER

PRODUCT DESCRIPTION

Thermoplastic One-Part Pourable Sealer is a one-part, moisture curing, elastomeric polyether sealant providing rapid skin time when exposed to atmospheric moisture forming a waterproof rubber surface in less than an hour. Moisture curing continues for fourteen to twenty-eight days, until a two-inch deep solid rubber seal encases the penetration. Complete cure time will vary depending on relative humidity and temperature. Mule-Hide's Tape Primer must be applied to all surfaces that will be in contact with the Thermoplastic One-Part Pourable Sealer. Primer is not used with the PVC Molded Sealant Pocket. Unused sealant remaining in the pouch will remain useable up to 30 days if pouch is resealed with original cap.

BASIC USES

This product is designed for use with our TPO, PVC & EPDM Sealant Pockets. The sealant's one-part, pourable consistency allows for quick pocket filling without mixing

SPECIFICATIONS

Typical Values*	
Color	White
Odor	Mild ester smell (mint) when wet. Odorless when dry
Specific Gravity	1.40 (11.6 lbs/gallon) – 1.44 (12.0 lbs/gallon
Viscosity (Brookfield RTV), cps	Self leveling 20,000 – 50,000
Hardness (Shore A) ASTM C 0661	25 to 35
Tack Free Time ASTM C 0679	Less than 1 hour @ 70º F (21ºC)
Long term weatherability ASTM G 53	No crazing or cracking
Service Temperature ASTM 2453	Minus 40ºF to 200ºF. (Minus 40ºC to 93ºC)
Elongation @ Break, % ASTM D 412	450
Long Term Weatherability ASTM G 53 - 98 cycles @ 12 hours/cycle - Condensate exposure: 4 hrs @ 122°F (50°C) - U.V. exposure – 8 hrs@ 158°F (70°C)	No Cracking or crazing
*Typical properties and characteristics are based on samples tested and are not guaranteed for all samples of this product. This data and information is intended as a guide and does not reflect the specification or specification range for any particular property of this product.	

PACKAGING

Each carton contains: 4 – 0.5 Gallon pouches per bucket (4-2 liter)
Weight Per Carton: 26 lbs/bucket (11.8 kg)

BENEFITS & SUPPLEMENTAL STATEMENTS

- No mixing required – ready to use
- Resealable pouch using original cap
- Provides a flexible and long-lasting seal around hard to flash projections
- Provides a watertight seal in less than an hour after application

MULE-HIDE THERMOPLASTIC ONE-PART POURABLE SEALER

COVERAGE RATES

One 0.5-gallon pouch (2-liter) will fill 122 cubic inches of volume within a sealant pocket. As an example, one 6" TPO, PVC or EPDM Sealant Pocket will require 0.23 gallons (0.87 liters) to fill completely (with no penetrations). Coverage rates are average and may vary due to jobsite conditions.

INSTALLATION INSTRUCTIONS

Preparation

1. Surfaces must be free of moisture, dirt and any contaminants. Any previously applied asphalt, caulking or sealants must be removed from the penetration.
2. Fill any voids in the roof deck around the penetration(s) to prevent sealant from seeping through the roof. Pourable sealer must be a minimum of 2" (50 mm) deep. All penetrations must be a minimum of 1" (25 mm) from sides of the pitch pan or sealer pocket.

TPO Application

1. Clean all surfaces with TPO Weathered Membrane Cleaner.
2. Mule-Hide Tape Primer is required for prepping the interior surfaces of the pocket. After welding the pocket in place, apply Mule-Hide Tape Primer to all bonding surfaces, including penetration(s), TPO-c membrane, inside wall and rim of TPO Molded Sealant Pocket. Allow primer to dry.

PVC Application

1. Clean all surfaces with PVC Weathered Membrane Cleaner
2. DO NOT PRIME PVC membrane or pocket with Mule-Hide Tape Primer

EPDM Application

1. Clean all surfaces with PVC Weathered Membrane Cleaner
2. Mule-Hide Tape Primer is required for prepping the interior surfaces of the pocket. After welding the pocket in place, apply Mule-Hide Tape Primer to all bonding surfaces, including penetration(s), TPO-c membrane, inside wall and rim of TPO Molded Sealant Pocket. DO NOT apply primer to blue plastic strip that forms inside wall of pourable sealer pocket. Allow primer to dry.

All Applications

1. Remove cap from 0.5-gallon (2-liter) pouch and pour Thermoplastic One-Part Pourable Sealer directly into pocket. Fill pocket completely until rim is covered with Thermoplastic One-Part Pourable Sealer making sure all voids are filled.
2. Avoid breathing vapors. Keep container closed when not in use. Use with adequate ventilation. If inhaled, remove to fresh air. If not breathing, perform artificial respiration. If breathing is difficult, give oxygen. Call a physician immediately.
3. If swallowed, DO NOT INDUCE VOMITING! Call a physician immediately
4. Avoid contact with eyes. Safety glasses or goggles are recommended. If splashed in eyes, immediately flush eyes with water for at least 15 minutes. Contact a physician immediately.
5. Avoid contact with skin. Wash hand thoroughly after handling. In case of contact with skin, thoroughly wash affected area with soap and water.
6. Do not thin. Thinning will affect performance.
7. KEEP OUT OF REACH OF CHILDREN.

MULE-HIDE THERMOPLASTIC ONE-PART POURABLE SEALER

STORAGE & HANDLING

Shelf life is established at 12 months. Shelf life is based on storage in original, unopened or undamaged containers at temperatures ranging from 60oF to 80oF. Should the Pourable Sealer be exposed to lower temperatures, restore to room temperature prior to use.

PROTECTION & SAFETY

Mule-Hide maintains Material Safety Data Sheets on all of its products. Material Safety Data Sheets contain health and safety information for your development of appropriate product handling procedures to protect your employees and customers. Mule-Hide's Material Safety Data Sheets should be read and understood by all of your supervisory personnel and employees before using Mule-Hide products in your facilities.

ADDITIONAL INFORMATION

The information given on this PDS is subject to change without notice. Always check the Mule-Hide website at www.mulehide.com for the latest information, changes and updates or contact Mule-Hide Products Company at 800-786-1492.

DISCLAIMER

The statements provided concerning the material shown are intended as a guide for material usage and are believed to be true and accurate at the time of printing. No statement made by anyone may supersede this information, except when done in writing by Mule-Hide Products Co., Inc. Since the manner of use is beyond our control, Mule-Hide does not authorize anyone to make any warranty of merchantability or fitness for any particular purpose or any other warranty, guarantee or representation, expressed or implied, concerning this material. This product may be eligible for a Mule-Hide warranty, please check the Mule-Hide website at www.mulehide.com or contact Mule-Hide directly at 800-786-1492 for details. Buyer and user accept the product under these conditions and assume the risk of any failure, any injury person or property (including that of the user), loss or liability resulting from the handling, storage or use of the product whether or not it is handled, stored or used in accordance with the directions or specifications. Mule-Hide must be notified in writing of any claims and be given the opportunity to inspect the alleged failure before repairs are made.

Mule-Hide Products Co., Inc.
1195 Prince Hall Dr.
Beloit, WI 53511

PRODUCT DATA SHEET
PDS 09-2310
Revision Date: FEB-2014

MULE-HIDE TPO BONDING ADHESIVE

PRODUCT DESCRIPTION

Mule-Hide TPO Bonding Adhesive is a high strength solvent-based contact adhesive that allows bonding of Mule- Hide membrane to various porous and non-porous substrates.

BASIC USES

Mule-Hide Bonding Adhesive is used for bonding cured flashings and membranes to a variety of substrates.

TYPICAL PHYSICAL PROPERTIES

Typical Properties and Characteristics*	
Base Material	Synthetic Rubber
Color	Yellow
Solids	20%
Flash Point	-4° F (-20° C) Closed Cup
Brookfield Viscosity	2,600 Centipoises
Avg Net Weight	7.1 lbs. / gallon (3.2 Kg)
Packaging	5 Gallon Pails
Shelf Life	1 Year

LEED Information	
Pre-consumer Recycled Content	0%
Post-consumer Recycled Content	0%
Manufacturing Location	Carlisle, PA
VOC Content	670 g/L

*Typical properties and characteristics are based on samples tested and are not guaranteed for all samples of this product. This data and information is intended as a guide and does not reflect the specification or specification range for any particular property of this product.

PACKAGING AND STORAGE

DOT Label Required: Flammable Liquid

Mule-Hide TPO Bonding Adhesive should be stored in a closed container between 60°F and 80°F for no longer than one year. Rotate stock.

BENEFITS

- Can be roller applied with a medium nap roller
- Solvent based bonding adhesive that allows for quick drying
- Provides excellent adhesion to various substrates

CODE APPROVALS/COMPLIANCE

A variety of Factory Mutual Ratings and Underwriter Laboratory Classifications are available. Contact Mule-Hide Technical Department for additional information.

COVERAGE RATES

Coverage for Mule-Hide TPO Bonding Adhesive is approximately 60 ft² (5.6 square m) per gallon (finished surface.) This coverage rate is an average and may vary due to conditions on the job site. Porous surfaces and substrates may require more bonding adhesive than the typical coverage rate.

MULE-HIDE TPO BONDING ADHESIVE

INSTALLATION TEMPERATURE

If adhesive is store at temperatures less than 60° F, restore to room temperature (~70° F) before using.

INSTALLATION INSTRUCTIONS

Surface Preparation

1. The surface, on or against which adhesive is to be applied, shall be clean, smooth, dry, free of fins, sharp edges, loose and foreign materials, oil and grease. Depressions greater than 1/4" (6 mm) should be feathered; using epoxy, mortar or other approved patching material. All sharp projections shall be removed by sweeping, blowing or vacuum cleaning.

Mixing

1. **Stir thoroughly until all settled pigments are dispersed and the adhesive is uniform in color. Stir adhesive for a minimum of 5 minutes.**

Application

1. After thorough stirring (minimum 5 minutes), apply Low VOC Bonding Adhesive to substrate and membrane using a 9" (228 mm) wide, ½" (13mm) medium nap roller. Application shall be continuous and uniform avoiding globs or puddles. An open time of 5 to 90 minutes, based on drying conditions is recommended before assembly. Low VOC Bonding Adhesive must be allowed to dry until tacky but does not string or stick to a dry finger touch. Any coated area, which has been exposed to rain, should be allowed to dry and then recoated. **Do not apply adhesive to seam areas or use with taped products.**

2. Roll the membrane onto the adhesive coated substrate while avoiding wrinkles. Immediately brush down the bonded portion of the sheet with a soft bristle push broom or a clean dry roller applicator to achieve maximum contact. In some applications, swelling of the membrane may occur initially, but this will disappear after several days' exposure. Do not re-broom membrane in an attempt to remove swelling.

   REVIEW CURRENT MULE-HIDE SPECIFICATIONS AND DETAILS FOR SPECIFIC APPLICATION REQUIREMENTS.

Precautions

1. Review the applicable Material Safety Data Sheet for complete safety information prior to use.

2. Low-VOC Bonding Adhesive must be stored in original, unopened containers at temperatures between 60ºF (15ºC) and 90ºF (32ºC). Jobsite storage in excess of 90ºF (32ºC) may affect product shelf life.

3. Prolonged exposure to below freezing temperatures will cause the adhesive to thicken and solidify in the can. Should the Low-VOC Bonding Adhesive be stored at temperatures lower than 25ºF (-4ºC), restore to room temperature for a minimum of 24 hours prior to use. Adhesive will perform as intended once it is returned to a liquid state. When temperatures are expected to be consistently below 40ºF (4ºC), a heated enclosure or hot box is required for storage.

4. Mule-Hide Bonding Adhesive is **EXTREMELY FLAMMABLE** -It contains solvents that are dangerous fire and explosion hazards when exposed to heat, flame or sparks. Do not smoke while applying. Do not use in a confined or unventilated area.

MULE-HIDE TPO BONDING ADHESIVE

Precautions (Continued

Vapors are heavier than air and may travel along ground or may be moved by ventilation and ignited by pilot lights, other flames, sparks, heaters, smoking, electrical motors, static discharge, or other ignition sources at locations distant from material handling point and flashback. All containers should be grounded when material is transferred from one container to another. A red caution label is required when shipping. A fire extinguisher should be available. In case of fire, use water spray, foam, dry chemical or carbon dioxide. Do not use a solid stream of water because it can scatter and spread the fire.

5. Avoid breathing vapors. Keep container closed when not in use. Use with adequate ventilation. If inhaled, remove to fresh air. If not breathing, perform artificial respiration. If breathing is difficult, give oxygen. Call a physician immediately. During application, efforts must be made to prevent fumes from entering the building via air ventilation ducts. Do not place open containers or mix adhesive near fresh air intake units. When possible, shut down or seal off the closest units.

6. If swallowed, **DO NOT INDUCE VOMITING.** Call a physician immediately.

7. Avoid contact with skin. Wash hands thoroughly after handling. In case of contact with skin, thoroughly wash affected area with soap and water. Contact physician if irritation persists. **Note:** Permeation resistant gloves (that meet ANSI/ISEA 105-2005) are recommended to be worn when using this product to protect hands from irritating ingredients.

8. Avoid contact with eyes. Safety glasses or goggles are recommended. If splashed in eyes, immediately flush eyes with plenty of clean water for at least 15 minutes. Contact a physician immediately.

9. Do not thin Low-VOC Bonding Adhesive. Thinning will affect performance. Excessively thick or gelled material should be discarded.

10. These materials are sensitive to ambient moisture and heat will accelerate the effect of moisture. Opened containers of Bonding Adhesive should be used within 48 hours. Adhesive will begin to thicken after this point, making it difficult and eventually impossible, to control adhesive thickness. In hot weather, do leave sealed containers on roof for prolonged periods of time. In cold weather, keep material at room temperature until ready to use. Stir adhesive occasionally while using.

11. Adhesive must be allowed to dry thoroughly. If membrane is mated with the substrate prior to the adhesive being dry, blistering will occur.

12. Coverage rates are an average and may vary due to jobsite conditions.

13. **KEEP OUT OF THE REACH OF CHILDREN**

STORAGE & HANDLING

Job site storage in excess of 90°F (32°C) may affect product shelf life. Should the Mule-Hide Bonding Adhesive be stored at temperatures lower than 60°F (15°C), restore to room temperature prior to use.

PROTECTION & SAFETY

Mule-Hide maintains Material Safety Data Sheets on all of its products. Material Safety Data Sheets contain health and safety information for your development of appropriate product handling procedures to protect your employees and customers. Mule-Hide's Material Safety Data Sheets should be read and understood by all of your supervisory personnel and employees before using Mule-Hide products in your facilities.

MULE-HIDE TPO BONDING ADHESIVE

ADDITIONAL INFORMATION

The information given on this PDS is subject to change without notice. Always check the Mule-Hide website at www.mulehide.com for the latest information, changes and updates or contact Mule-Hide Products Company at 800-786-1492.

DISCLAIMER

The statements provided concerning the material shown are intended as a guide for material usage and are believed to be true and accurate at the time of printing. No statement made by anyone may supersede this information, except when done in writing by Mule-Hide Products Co., Inc. Since the manner of use is beyond our control, Mule-Hide does not authorize anyone to make any warranty of merchantability or fitness for any particular purpose or any other warranty, guarantee or representation, expressed or implied, concerning this material. This product may be eligible for a Mule-Hide warranty, please check the Mule-Hide website at www.mulehide.com or contact Mule-Hide directly at 800-786-1492 for details. Buyer and user accept the product under these conditions and assume the risk of any failure, any injury person or property (including that of the user), loss or liability resulting from the handling, storage or use of the product whether or not it is handled, stored or used in accordance with the directions or specifications. Mule-Hide must be notified in writing of any claims and be given the opportunity to inspect the alleged failure before repairs are made.

Mule-Hide Products Co., Inc.
1195 Prince Hall Dr.
Beloit, WI 53511

PRODUCT DATA SHEET
PDS 09-2405
Revision Date: Jan-2014

MULE-HIDE Low VOC BONDING ADHESIVE

PRODUCT DESCRIPTION

Low VOC Bonding Adhesive is a high strength solvent-based contact adhesive that allows bonding of EPDM and TPO membrane to various porous and non-porous substrates. It is specially formulated using a blend of VOC exempt and non-exempt solvents to be meet the < 250 gpl VOC content requirements of the OTC Model Rule for Single Ply Roofing Adhesives. Low VOC Bonding Adhesive is easily applied with a 9" (228 mm) medium nap roller to create a strong bond between the membrane and approved substrate.

This product does not comply with the following California counties' VOC regulations: Alameda, Contra Costa, El Dorado, Los Angeles, Marin, Napa, Orange, Riverside, Sacramento, San Bernardino, San Diego, San Francisco, San Mateo, Santa Clara, Solano, Sonoma, and Tehama. These areas require the use of Mule-Hide Low-VOC 1168 Bonding Adhesive.

BASIC USES

Mule-Hide Bonding Adhesive is used for bonding (cured) flashings and membranes to a variety of substrates.

TYPICAL PHYSICAL PROPERTIES

Typical values*	
Base Material	Synthetic Rubber
Color	Yellow
Solids	22.2%
VOC:	250 g/l max
Flash Point	0° F (-17° C) Closed Cup
Brookfield Viscosity	2,600 Centipoises
Avg Net Weight	8.1 lbs. / gallon (3.7 Kg)
Packaging	5 Gallon Pails
Shelf Life	1 Year

LEED Information	
Pre-consumer Recycled Content	0%
Post-consumer Recycled Content	0%
Manufacturing Location	Carlisle, PA
VOC Content	< 250 g/L

*General properties. Typical properties and characteristics are based on samples tested and are not guaranteed for all samples of this product. This data and information is intended as a guide and does not reflect the specification or specification range for any particular property of this product.

PACKAGING

Packaged in 5 gallon pails

BENEFITS & SUPPLEMENTAL STATEMENTS

- High strength adhesive with quick bonding characteristics
- Ease of application with a medium nap roller
- Provides excellent adhesion between EPDM membranes and a variety of substrates
- Provides quicker flash-off time in cold weather than other Low Voc Adhesives
- Lower viscosity results in easier application, even in cold weather

MULE-HIDE Low VOC BONDING ADHESIVE

CODE APPROVALS/COMPLIANCE

A variety of Factory Mutual Ratings and Underwriter Laboratory Classifications are available. Contact Mule-Hide Technical Department for additional information.

COVERAGE RATES

Coverage for Mule-Hide Bonding Adhesive is approximately 60 ft² (5.6 square m) per gallon (finished surface.) This coverage rate is an average and may vary due to conditions on the job site. Porous surfaces and substrates may require more bonding adhesive than the typical coverage rate.

INSTALLATION TEMPERATURE

If adhesive is store at temperatures less than 60° F, restore to room temperature (~70° F) before using.

INSTALLATION INSTRUCTIONS

Surface Preparation

1. The surface, on or against which adhesive is to be applied, shall be clean, smooth, dry, free of fins, sharp edges, loose and foreign materials, oil and grease. Depressions greater than 1/4" (6 mm) should be feathered; using epoxy, mortar or other approved patching material. All sharp projections shall be removed by sweeping, blowing or vacuum cleaning.

Mixing

1. **Stir thoroughly until all settled pigments are dispersed and the adhesive is uniform in color. Stir adhesive for a minimum of 5 minutes.**

Application

1. After thorough stirring (minimum 5 minutes), apply Low VOC Bonding Adhesive to substrate and membrane using a 9" (228 mm) wide, ½" (13mm) medium nap roller. Application shall be continuous and uniform avoiding globs or puddles. An open time of 5 to 90 minutes, based on drying conditions is recommended before assembly. Low VOC Bonding Adhesive must be allowed to dry until tacky but does not string or stick to a dry finger touch. Any coated area, which has been exposed to rain, should be allowed to dry and then recoated. **Do not apply adhesive to seam areas or use with taped products.**

2. Roll the membrane onto the adhesive coated substrate while avoiding wrinkles. Immediately brush down the bonded portion of the sheet with a soft bristle push broom or a clean dry roller applicator to achieve maximum contact. In some applications, swelling of the membrane may occur initially, but this will disappear after several days' exposure. Do not re-broom membrane in an attempt to remove swelling.

   REVIEW CURRENT MULE-HIDE SPECIFICATIONS AND DETAILS FOR SPECIFIC APPLICATION REQUIREMENTS.

Precautions

1. Review the applicable Material Safety Data Sheet for complete safety information prior to use.

2. Low-VOC Bonding Adhesive must be stored in original, unopened containers at temperatures between 60ºF (15ºC) and 90ºF (32ºC). Jobsite storage in excess of 90ºF (32ºC) may affect product shelf life.

MULE-HIDE Low VOC BONDING ADHESIVE

Precautions (continued)

3. Prolonged exposure to below freezing temperatures will cause the adhesive to thicken and solidify in the can. Should the Low-VOC Bonding Adhesive be stored at temperatures lower than 25ºF (-4ºC), restore to room temperature for a minimum of 24 hours prior to use. Adhesive will perform as intended once it is returned to a liquid state. When temperatures are expected to be consistently below 40ºF (4ºC), a heated enclosure or hot box is required for storage.

4. Mule-Hide Bonding Adhesive is **EXTREMELY FLAMMABLE** -It contains solvents that are dangerous fire and explosion hazards when exposed to heat, flame or sparks. Do not smoke while applying. Do not use in a confined or unventilated area. Vapors are heavier than air and may travel along ground or may be moved by ventilation and ignited by pilot lights, other flames, sparks, heaters, smoking, electrical motors, static discharge, or other ignition sources at locations distant from material handling point and flashback. All containers should be grounded when material is transferred from one container to another. A red caution label is required when shipping. A fire extinguisher should be available. In case of fire, use water spray, foam, dry chemical or carbon dioxide. Do not use a solid stream of water because it can scatter and spread the fire.

5. Avoid breathing vapors. Keep container closed when not in use. Use with adequate ventilation. If inhaled, remove to fresh air. If not breathing, perform artificial respiration. If breathing is difficult, give oxygen. Call a physician immediately. During application, efforts must be made to prevent fumes from entering the building via air ventilation ducts. Do not place open containers or mix adhesive near fresh air intake units. When possible, shut down or seal off the closest units.

6. If swallowed, **DO NOT INDUCE VOMITING.** Call a physician immediately.

7. Avoid contact with skin. Wash hands thoroughly after handling. In case of contact with skin, thoroughly wash affected area with soap and water. Contact physician if irritation persists. **Note:** Permeation resistant gloves (that meet ANSI/ISEA 105-2005) are recommended to be worn when using this product to protect hands from irritating ingredients.

8. Avoid contact with eyes. Safety glasses or goggles are recommended. If splashed in eyes, immediately flush eyes with plenty of clean water for at least 15 minutes. Contact a physician immediately.

9. Do not thin Low-VOC Bonding Adhesive. Thinning will affect performance. Excessively thick or gelled materialshould be discarded.

10. These materials are sensitive to ambient moisture and heat will accelerate the effect of moisture. Opened containers of Bonding Adhesive should be used within 48 hours. Adhesive will begin to thicken after this point, making it difficult and eventually impossible, to control adhesive thickness. In hot weather, do leave sealed containers on roof for prolonged periods of time. In cold weather, keep material at room temperature until ready to use. Stir adhesive occasionally while using.

11. Adhesive must be allowed to dry thoroughly. If membrane is mated with the substrate prior to the adhesive being dry, blistering will occur.

12. Coverage rates are an average and may vary due to jobsite conditions.

13. **KEEP OUT OF THE REACH OF CHILDREN**

MULE-HIDE Low VOC BONDING ADHESIVE

STORAGE & HANDLING

Job site storage in excess of 90°F (32°C) may affect product shelf life. Should the Mule-Hide Bonding Adhesive be stored at temperatures lower than 60°F (15°C), restore to room temperature prior to use.

PROTECTION & SAFETY

Mule-Hide maintains Material Safety Data Sheets on all of its products. Material Safety Data Sheets contain health and safety information for your development of appropriate product handling procedures to protect your employees and customers. Mule-Hide's Material Safety Data Sheets should be read and understood by all of your supervisory personnel and employees before using Mule-Hide products in your facilities.

ADDITIONAL INFORMATION

The information given on this PDS is subject to change without notice. Always check the Mule-Hide website at www.mulehide.com for the latest information, changes and updates or contact Mule-Hide Products Company at 800-786-1492.

DISCLAIMER

The statements provided concerning the material shown are intended as a guide for material usage and are believed to be true and accurate at the time of printing. No statement made by anyone may supersede this information, except when done in writing by Mule-Hide Products Co., Inc. Since the manner of use is beyond our control, Mule-Hide does not authorize anyone to make any warranty of merchantability or fitness for any particular purpose or any other warranty, guarantee or representation, expressed or implied, concerning this material. This product may be eligible for a Mule-Hide warranty, please check the Mule-Hide website at www.mulehide.com or contact Mule-Hide directly at 800-786-1492 for details. Buyer and user accept the product under these conditions and assume the risk of any failure, any injury person or property (including that of the user), loss or liability resulting from the handling, storage or use of the product whether or not it is handled, stored or used in accordance with the directions or specifications. Mule-Hide must be notified in writing of any claims and be given the opportunity to inspect the alleged failure before repairs are made.

Mule-Hide Products Co., Inc.
1195 Prince Hall Dr.
Beloit, WI 53511

PRODUCT DATA SHEET
PDS 09-2415
Revision Date: April 2013

Low VOC BONDING ADHESIVE 1168

PRODUCT DESCRIPTION

Low VOC Bonding Adhesive 1168 is a high strength solvent-based contact adhesive that allows bonding of EPDM and TPO membranes to various porous and non-porous substrates. It is specially formulated using a blend of VOC exempt and non-exempt solvents to be meet the < 250 g/l VOC content requirements of the OTC Model Rule for Single Ply Roofing Adhesives.

This product COMPLIES with the following California counties' VOC regulations: Alameda, Contra Costa, El Dorado, Los Angeles, Marin, Napa, Orange, Riverside, Sacramento, San Bernardino, San Diego, San Francisco, San Mateo, Santa Clara, Solano, Sonoma, and Tehama.

BASIC USES

Mule-Hide Bonding Adhesive is used for bonding cured flashings and membranes to a variety of

TYPICAL PHYSICAL PROPERTIES

Typical values*	
Base Material	Synthetic Rubber
Color	Yellow
Solids	21.0%
VOC:	250 g/l max
Flash Point	0° F (-17° C) Closed Cup
Brookfield Viscosity	5,000 Centipoises
Avg Net Weight	10.5 lbs. / gallon (4.76 Kg)
Packaging	5 Gallon Pails
Shelf Life	1 Year

*General properties. Typical properties and characteristics are based on samples tested and are not guaranteed for all samples of this product. This data and information is intended as a guide and does not reflect the specification or specification range for any particular property of this product.

PACKAGING

5 Gallon Pails

BENEFITS & SUPPLEMENTAL STATEMENTS

- High strength adhesive with quick bonding characteristics
- Ease of application with a medium nap roller
- Provides excellent adhesion between EPDM or TPO membranes and a variety of substrates

CODE APPROVALS/COMPLIANCE

A variety of Factory Mutual Ratings and Underwriter Laboratory Classifications are available. Contact Mule-Hide Technical Department for additional information.

Low VOC BONDING ADHESIVE 1168

COVERAGE RATES

Coverage for Low VOC Bonding Adhesive 1168 is approximately 60 ft² (5.6 square m) per gallon (finished surface.) This coverage rate is an average and may vary due to conditions on the job site. Porous surfaces and substrates may require more bonding adhesive than the typical coverage rate.

INSTALLATION TEMPERATURE

If adhesive is store at temperatures less than 60° F, restore to room temperature (~70° F) before using.

INSTALLATION INSTRUCTIONS

Surface Preparation

1. The surface, on or against which adhesive is to be applied, shall be clean, smooth, dry, free of fins, sharp edges, loose and foreign materials, oil and grease. Depressions greater than 1/4" (6 mm) should be feathered; using epoxy, mortar or other approved patching material. All sharp projections shall be removed by sweeping, blowing or vacuum cleaning.

Mixing

MIXING: Stir thoroughly until all settled pigments are dispersed and the cement is uniform in color. Minimum 5 minutes stirring is recommended.

Application

1. After thorough stirring (minimum 5 minutes), apply Low VOC Bonding Adhesive 1168 to substrate and membrane using a 9" (228mm) wide, ½" (13 mm) medium nap roller. Application shall be continuous and uniform avoiding globs or puddles. An open time of 5 to 90 minutes, based on drying conditions is recommended before assembly. Low VOC Bonding Adhesive 1168 must be allowed to dry until it does not string or stick to a dry finger touch. Any coated area, which has been exposed to rain, should be allowed to dry and then recoated. **Do not apply adhesive to splice areas to be seamed.**

2. Roll the membrane onto the adhesive coated substrate while avoiding wrinkles. Immediately brush down the bonded portion of the sheet with a soft bristle push broom or a clean dry roller applicator to achieve maximum contact. In some applications, swelling of the membrane may occur initially, but this will disappear after several days' exposure. Do not re-broom membrane in an attempt to remove swelling.

   Note: This adhesive may be slightly thicker than standard Low-VOC Bonding Adhesive and may require a longer drying time.

   REVIEW CURRENT MULE-HIDE SPECIFICATIONS AND DETAILS FOR SPECIFIC APPLICATION REQUIREMENTS.

Precautions

1. Review the applicable Material Safety Data Sheet for complete safety information prior to use.

Low VOC BONDING ADHESIVE 1168

Precautions - continued

2. Low-VOC VOC Bonding Adhesive must be stored in original, unopened containers at temperatures between 60ºF (15ºC) and 90ºF (32ºC). Jobsite storage in excess of 90ºF (32ºC) may affect product shelf life. Prolonged exposure to below freezing temperatures will cause the adhesive to thicken and solidify in the can. Should the Low-VOC Bonding Adhesive be stored at temperatures lower than 25ºF (-4ºC), restore to room temperature for a minimum of 24 hours prior to use. Adhesive will perform as intended once it is returned to a liquid state. When temperatures are expected to be consistently below 40ºF (4ºC), a heated enclosure or hot box is required for storage.

3. Low VOC Bonding Adhesive 1168 is **EXTREMELY FLAMMABLE** -It contains solvents that are dangerous fire and explosion hazards when exposed to heat, flame or sparks. Do not smoke while applying. Do not use in a confined or unventilated area. Vapors are heavier than air and may travel along ground or may be moved by ventilation and ignited by pilot lights, other flames, sparks, heaters, smoking, electrical motors, static discharge, or other ignition sources at locations distant from material handling point and flashback. All containers should be grounded when material is transferred from one container to another. A red caution label is required when shipping. A fire extinguisher should be available. In case of fire, use water spray, foam, dry chemical or carbon dioxide. Do not use a solid stream of water because it can scatter and spread the fire.

4. Avoid breathing vapors. Keep container closed when not in use. Use with adequate ventilation. If inhaled, remove to fresh air. If not breathing, perform artificial respiration. If breathing is difficult, give oxygen. Call a physician immediately. During application, efforts must be made to prevent fumes from entering the building via air ventilation ducts. Do not place open containers or mix adhesive near fresh air intake units. When possible, shut down or seal off the closest units.

5. If swallowed, **DO NOT INDUCE VOMITING.** Call a physician immediately.

6. Avoid contact with skin. Wash hands thoroughly after handling. In case of contact with skin, thoroughly wash affected area with soap and water. Contact physician if irritation persists. **Note:** Permeation resistant gloves (that meet ANSI/ISEA 105-2005) are recommended to be worn when using this product to protect hands from irritating ingredients.

7. Avoid contact with eyes. Safety glasses or goggles are recommended. If splashed in eyes, immediately flush eyes with plenty of clean water for at least 15 minutes. Contact a physician immediately.

8. Do not thin Low VOC Bonding Adhesive 1168. Thinning will affect performance. Excessively thick or gelled material should be discarded.

9. Opened containers of Low VOC Bonding Adhesive 1168 should be used within 48 hours. Adhesive will begin to thicken after this point, making it difficult and eventually impossible, to control applied thickness. In hot weather, do not leave sealed containers on roof for prolonged periods of time. In cold weather, keep material at room temperature until ready to use. Stir adhesive occasionally while using.

10. **Adhesive must be allowed to dry thoroughly.** If membrane is mated with the substrate prior to the adhesive being dry, blistering will occur and not subside over time.

11. **KEEP OUT OF THE REACH OF CHILDREN**

STORAGE & HANDLING

Job site storage in excess of 90°F (32°C) may affect product shelf life. Should the Low VOC Bonding Adhesive 1168 be stored at temperatures lower than 60°F (15°C), restore to room temperature prior to use.

Low VOC BONDING ADHESIVE 1168

PROTECTION & SAFETY

Mule-Hide maintains Material Safety Data Sheets on all of its products. Material Safety Data Sheets contain health and safety information for your development of appropriate product handling procedures to protect your employees and customers. Mule-Hide's Material Safety Data Sheets should be read and understood by all of your supervisory personnel and employees before using Mule-Hide products in your facilities.

ADDITIONAL INFORMATION

The information given on this PDS is subject to change without notice. Always check the Mule-Hide website at www.mulehide.com for the latest information, changes and updates or contact Mule-Hide Products Company at 800-786-1492.

DISCLAIMER

The statements provided concerning the material shown are intended as a guide for material usage and are believed to be true and accurate at the time of printing. No statement made by anyone may supersede this information, except when done in writing by Mule-Hide Products Co., Inc. Since the manner of use is beyond our control, Mule-Hide does not authorize anyone to make any warranty of merchantability or fitness for any particular purpose or any other warranty, guarantee or representation, expressed or implied, concerning this material. This product may be eligible for a Mule-Hide warranty, please check the Mule-Hide website at www.mulehide.com or contact Mule-Hide directly at 800-786-1492 for details. Buyer and user accept the product under these conditions and assume the risk of any failure, any injury person or property (including that of the user), loss or liability resulting from the handling, storage or use of the product whether or not it is handled, stored or used in accordance with the directions or specifications. Mule-Hide must be notified in writing of any claims and be given the opportunity to inspect the alleged failure before repairs are made.

Mule-Hide Products Co., Inc.
1195 Prince Hall Dr.
Beloit, WI 53511

WBBA 2000

PRODUCT DESCRIPTION

WBBA 2000 is a semi pressure-sensitive water base bonding adhesive that can be used with Mule-Hide fleece back membranes as well as standard (non fleece back) EPDM, TPO, and PVC membranes. WBBA 2000 offers high peel strength with low-VOCs and no strong odors.

BASIC USES

WBBA 2000 bonding adhesive can be used as a single side, wet lay-in adhesive on horizontal surfaces with our Mule-Hide fleece back membranes. It can also be used as a two-sided, contact adhesive with our standard (non-fleece back) EPDM, TPO and PVC roofing membranes on both vertical and horizontal surfaces.

TYPICAL PHYSICAL PROPERTIES

Typical values*	
Base Material	Acrylic
Color	White (translucent when dry)
Solids	62.5%
VOC:	8 g/l max
Flash Point	None
Brookfield Viscosity	16,000 Centipoises
Avg Net Weight	8.8 lbs. / gallon (3.99 Kg)
Packaging	5 Gallon Pails
Shelf Life	1 Year

*General properties. Typical properties and characteristics are based on samples tested and are not guaranteed for all samples of this product. This data and information is intended as a guide and does not reflect the specification or specification range for any particular property of this product.

PACKAGING

5 Gallon Pails

COVERAGE RATES

Fleece Back Membranes - Single-side, wet lay-in: Coverage rate for WBBA 2000 applied as single side, wet lay-in is approximately 100 to 120 ft² (10.2 square m) of finished surface per gallon

Standard (non-fleece back) Membranes - Double-sided, contact lay-in: Coverage rate for WBBA 2000 applied as double sided, contact lay-in is approximately 50 to 60 ft² (5.1 square m) of finished surface per gallon (membrane and substrate).

These coverage rates are an average and may vary due to conditions on the job site. Porous surfaces and substrates may require more bonding adhesive than the typical coverage rate information shown above.

INSTALLATION TEMPERATURE

Adhesive is designed to be applied when ambient temperature is 40°F (4°C) and rising. Do not apply if ambient temperature will drop below 32°F (0°C) before adhesive completely dries.

DO NOT ALLOW PRODUCT TO FREEZE. Frozen product is un-usable and must be discarded.

WBBA 2000

INSTALLATION INSTRUCTIONS

1. The surface to which adhesive is to be applied must be clean, smooth, dry, free of fins, sharp edges, loose and foreign materials. Depressions or offsets greater than ¼" should be feathered using epoxy, mortar or other approved material. All sharp projections shall be removed by sweeping, blowing or vacuum cleaning.

2. WBBA 2000 bonding adhesive is approved for use on (max) 15-year warranties over Polyiso, Dens Deck Prime, High Density Fiberboard, OSB, Plywood, cellular lightweight concrete and structural concrete.

3. Mix adhesive thoroughly scraping the sides and bottom of the can (minimum of 5 minutes is required) until adhesive is uniform in color.

4. Using a ¼" or ⅜" nap roller apply adhesive in a uniform manner avoiding globs, puddles and holidays (uncoated areas). Avoid accumulation of adhesive between insulation joints. Do not exceed published application rates.

Single Side (wet lay-in) Application with Fleece Back Membranes

1. Apply a smooth even coating of WBBA 2000 bonding adhesive to the substrate at the rate of 100 to 120 square feet per gallon and immediately roll the fleece back membrane into the wet adhesive.

2. Once the membrane has been mated to the substrate, broom the membrane with a stiff bristled push broom to ensure proper contact and 100% adhesion.

4. WBBA 2000 bonding adhesive can be applied with a 1/8" notched squeegee or a medium nap roller. Note: Adhesive must be wet at time of membrane placement.

5. Do not apply adhesive in seam lap areas that are to be heat welded.

Two-Sided Contact Application with Standard (non- fleece back) Membranes - Horizontal Surfaces

1. Apply a smooth, even coat of WBBA 2000 bonding adhesive to the back side of the membrane and substrate. Do not apply adhesive in area of seam laps.

2. Coverage rate to be approximately:
   120 square feet per gallon for one surface (membrane or substrate only) or
   60 square feet per gallon per finished surface (membrane and substrate)

3. Allow adhesive to dry until it turns translucent and does not transfer to a dry finger or pull away from the substrate. WBBA 2000 bonding adhesive will take a longer time to dry. Adhesive must be dry but still tacky (but not string) when the sheet is mated to the substrate. Do not allow to over dry.

4. Mate surfaces together avoiding wrinkles. Immediately roll the bonded area of the sheet with a 100 to 150 lbs roller to ensure full contact. It is important to thoroughly roll the membrane over all insulation joints. Repeat this procedure for remaining sheets.

5. Extended drying times can be expected during cool, overcast, humid, shaded, or late day applications. The adhesive must be dry (but still tacky) before mating surfaces to avoid permanent blisters due to trapped moisture or a lack of sufficient adhesion.

WBBA 2000

Standard Membrane (vertical walls two-sided contact application)

1. Apply a smooth, even coat of WBBA 2000 bonding adhesive to the back side of the membrane and substrate. Do not apply adhesive in area of seam laps.

2. Coverage rate to be approximately:
   120 square feet per gallon for one surface (membrane or substrate only) or
   60 square feet per gallon per finished surface (membrane and substrate)

3. Allow adhesive to dry until it turns translucent and does not transfer to a dry finger or pull away from the substrate. WBBA 2000 bonding adhesive will take a longer time to dry. Adhesive must be dry but still tacky (but not string) when the sheet is mated to the vertical surface. Do not allow to over dry.

4. Mate surfaces together avoiding wrinkles. Immediately roll the bonded area of the sheet with a 2-inch wide rubber hand roller to promote maximum positive contact between the membrane and the substrate. Overlap all adjacent flashing sheets a minimum of 2 inches. The Heat-Weld Membrane Flashings shall extend a minimum of 6 inches onto the field sheet and be securely adhered. There shall be a minimum 2 inches hot-air weld in front of the fastener plates. All side laps are to overlap a minimum of 2 inches.

5. Extended drying times can be expected during cool, overcast, humid, shaded, or late day applications. The adhesive must be dry (but still tacky) before mating surfaces to avoid permanent blisters due to trapped moisture or lack of sufficient adhesion...

Precautions

1. Review the applicable Material Safety Data Sheet for complete safety information prior to use.

2. Avoid breathing vapors. Keep container closed when not in use. Use with adequate ventilation. If inhaled, remove to fresh air.

3. If swallowed, **DO NOT INDUCE VOMITING.** Call a physician immediately.

4. Avoid contact with skin. Wash hands thoroughly after handling. In case of contact with skin, thoroughly wash affected area with soap and water.

5. Avoid contact with eyes. Safety glasses or goggles are recommended. If splashed in eyes, immediately flush eyes with plenty of clean water for at least 15 minutes. Contact a physician immediately.

6. Do not thin WBBA 2000. Thinning will affect performance and may coagulate the adhesive.

7. Job site storage in excess of 90°F (32°C) may affect product shelf life. DO NOT ALLOW WBBA 2000 TO FREEZE. Do not store below 40°F.

8. WBBA 2000 will turn translucent or clear when completely dry. Dry time is dependent upon ambient conditions.

9. WBBA 2000 is to be used when ambient temperatures are 40°F (4°F and rising. Do not apply if ambient temperature will drop below 32°F (0°F) before adhesive completely dries.

10. Open containers of WBBA 2000 should be used within 48 hours. Adhesive will form a thick skin in the container that will not dissolve. Remaining adhesive can be used once the skinned layer has been removed.

WBBA 2000

Precautions (continued)

11. Extended drying times can be expected in cool or humid conditions as well as shaded areas. Not allowing the adhesive to properly dry in a two-sided contact adhesive application will result in poor adhesive strength and/or blisters occurring over time.

12. Keep out of reach of children.

STORAGE & HANDLING

Job site storage in excess of 90°F (32°C) may affect product shelf life. DO NOT ALLOW WBBA 2000 TO FREEZE. Do not store below 40°F.

PROTECTION & SAFETY

Mule-Hide maintains Material Safety Data Sheets on all of its products. Material Safety Data Sheets contain health and safety information for your development of appropriate product handling procedures to protect your employees and customers. Mule-Hide's Material Safety Data Sheets should be read and understood by all of your supervisory personnel and employees before using Mule-Hide products in your facilities.

ADDITIONAL INFORMATION

The information given on this PDS is subject to change without notice. Always check the Mule-Hide website at www.mulehide.com for the latest information, changes and updates or contact Mule-Hide Products Company at 800-786-1492.

DISCLAIMER

Mule-Hide Products Co., Inc.
1195 Prince Hall Dr.
Beloit, WI 53511

WEATHERED MEMBRANE CLEANER

PRODUCT DESCRIPTION

Weathered Membrane Cleaner is a clear liquid solvent used to clean EPDM and TPO membranes.

BASIC USES

Weathered Membrane Cleaner is used to clean both new and in-service EPDM and TPO membranes prior to the seaming process. This cleaner helps to loosen and remove dirt and other contaminants from the surface of the EPDM and TPO-c membranes and leaves a suitable surface for welding or the subsequent application of Tape Primer.

Not for use over PVC membranes.

TYPICAL PHYSICAL PROPERTIES

Typical Properties and Characteristics	
Color	Clear
Solids	0%
Flash Point	65ºF (18ºC)
Boiling Point	260ºF (127ºC)
Packaging	5-gallon (18.9 liter) closed top pail Cartons of 2 x 1-gallon (3.8 liter) closed top pail
Typical properties and characteristics are based on samples tested and are not guaranteed for all samples of this product. This data and information is intended as a guide and does not reflect the specification or specification range for any particular property of this product.	

LEED Information	
Pre-consumer recycle content	0%
Post-consumer recycle content	0%
Manufacturing Location	Carlisle, PA
VOC Content*	755 grams/liter
*This product is exempt from VOC regulations.	

BENEFITS & SUPPLEMENTAL STATEMENTS

- Easily removes dirt and other contaminates from EPDM and TPO membranes
- Prepares TPO membranes for welding and application of tapes
- Prepares EPDM membranes for application of primer, adhesives and tapes

COVERAGE RATES

Coverage rate depends on the age of the membrane and amount of dirt/debris on the surface. Coverage is approximately 400 square feet (one surface) per gallon

INSTALLATION INSTRUCTIONS

EPDM

1. Remove as much loose material as possible from the membrane surface where the adhesive or pressure-sensitive product will be applied by brooming or wiping the area with a dry rag. Extreme conditions of accumulated dirt may require a low sudsing detergent and water cleaning (rinse area thoroughly with CLEAN water and allow to dry).

WEATHERED MEMBRANE CLEANER

INSTALLATION INSTRUCTIONS (continued)

2. Saturate a clean rag with Weathered Membrane Cleaner. SCRUB the area in a circular motion. Continue to clean the area, changing rags frequently, until the surface is a consistent color with no streaking. Additional cleaning is required at factory seams (scrub parallel to the seam). Allow to dry.
3. Apply primer according to product instructions and/or roofing system specification.

TPO – New

1. Saturate a clean rag with Weathered Membrane Cleaner.
2. Wipe the area to be cleaned until the membrane is a consistent color with no streaking and allow to dry.
3. Weld the cleaned membrane together with an appropriate hot-air welder.

TPO - Aged

1. Using a Scotch-Brite® pad and Weathered Membrane Cleaner, scrub the area to be welded. (the cleaner will become white with membrane residue during this application step)
2. Clean all residue from the area to be welded using a rag soaked with Weathered Membrane Cleaner. Allow to dry.
3. Weld the cleaned material together using an appropriate hot-air welder.
   Review Mule-Hide Specifications and Details for additional information.

PRECAUTIONS

1. Review the applicable Material Safety Data Sheet for complete safety information prior to use
2. Weathered Membrane Cleaner is **EXTREMELY FLAMMABLE** -It contains solvents that are dangerous fire and explosion hazards when exposed to heat, flame or sparks. Do not smoke while applying. Do not use in a confined or unventilated area. Vapors are heavier than air and may travel along ground or may be moved by ventilation and ignited by pilot lights, other flames, sparks, heaters, smoking, electrical motors, static discharge, or other ignition sources at locations distant from material handling point and flashback. All containers should be grounded when material is transferred from one container to another. A red caution label is required when shipping. A fire extinguisher should be available. In case of fire, use water spray, foam, dry chemical or carbon dioxide. Do not use a solid stream of water because it can scatter and spread the fire.
3. Avoid breathing vapors. Keep container closed when not in use. Use with adequate ventilation. If inhaled, remove to fresh air. If not breathing, perform artificial respiration. If breathing is difficult, give oxygen. Call a physician immediately. During application, efforts must be made to prevent fumes from entering the building via air ventilation ducts. Do not place open containers or mix adhesive near fresh air intake units. When possible, shut down or seal off the closest units.
4. If swallowed, **DO NOT INDUCE VOMITING.** Call a physician immediately.
5. Avoid contact with skin. Wash hands thoroughly after handling. In case of contact with skin, thoroughly wash affected area with soap and water. Contact physician if irritation persists. **Note:** Permeation resistant gloves (that meet ANSI/ISEA 105-2005) are recommended to be worn when using this product to protect hands from irritating ingredients.
6. Avoid contact with eyes. Safety glasses or goggles are recommended. If splashed in eyes, immediately flush eyes with plenty of clean water for at least 15 minutes. Contact a physician immediately.
7. **KEEP OUT OF REACH OF CHILDREN.**

WEATHERED MEMBRANE CLEANER

PROTECTION & SAFETY

Mule-Hide maintains Material Safety Data Sheets on all of its products. Material Safety Data Sheets contain health and safety information for your development of appropriate product handling procedures to protect your employees and customers. Mule-Hide's Material Safety Data Sheets should be read and understood by all of your supervisory personnel and employees before using Mule-Hide products in your facilities.

ADDITIONAL INFORMATION

The information given on this PDS is subject to change without notice. Always check the Mule-Hide website at www.mulehide.com for the latest information, changes and updates or contact Mule-Hide Products Company at 800-786-1492.

DISCLAIMER

The statements provided concerning the material shown are intended as a guide for material usage and are believed to be true and accurate at the time of printing. No statement made by anyone may supersede this information, except when done in writing by Mule-Hide Products Co., Inc. Since the manner of use is beyond our control, Mule-Hide does not authorize anyone to make any warranty of merchantability or fitness for any particular purpose or any other warranty, guarantee or representation, expressed or implied, concerning this material. This product may be eligible for a Mule-Hide warranty, please check the Mule-Hide website at www.mulehide.com or contact Mule-Hide directly at 800-786-1492 for details. Buyer and user accept the product under these conditions and assume the risk of any failure, any injury person or property (including that of the user), loss or liability resulting from the handling, storage or use of the product whether or not it is handled, stored or used in accordance with the directions or specifications. Mule-Hide must be notified in writing of any claims and be given the opportunity to inspect the alleged failure before repairs are made.

Mule-Hide Products Co., Inc.
1195 Prince Hall Dr.
Beloit, WI 53511

LOW VOC PRIMER

PRODUCT DESCRIPTION

Low VOC Primer is a solvent-based product designed for one-step cleaning and priming of EPDM and TPO surfaces to be bonded with In-Seam Tapes, Uncured Flashing Tapes, Cured Cover Tapes, and Pre-Taped membranes. It is a Low VOC product that is ideal for use where environmental concerns are an issue.

BASIC USES

A Low VOC product designed for one-step cleaning and priming of EPDM and TPO surfaces prior to the application of In-Seam Tapes and other Taped Products.

TYPICAL PHYSICAL PROPERTIES*

Base Material	Synthetic Rubber
Solids	9%
Flash Point	40ºF (4.4ºC)
VOC	Less than 250 grams/liter
Shelf Life	9 months
Average Weight	9.55 lbs./gallon (1.14 kg/liter)

*General properties. Typical properties and characteristics are based on samples tested and are not guaranteed for all samples of this product. This data and information is intended as a guide and does not reflect the specification or specification range for any particular property of this product.

COLORS

Olive Drab to Dark Gray

PACKAGING

(6) 1 gallon (3.8 liter) cans per carton

BENEFITS & SUPPLEMENTAL STATEMENTS

Promotes excellent adhesion with Tape Products
One step cleaner and primer
VOC less than 250 gpl

COVERAGE RATES

Approximately 250 square feet / gallon with Dusted Sheet

INSTALLATION TEMPERATURE

If primer is store at temperatures less than 60° F, restore to room temperature (~70° F) before using.

MIXING

Mixing is not recommended, even when settling has occurred. The Low-VOC Primer contains a non-partitioning agent that may settle to the bottom of the can. Do not attempt to break up or stir back into the primer.

LOW VOC PRIMER

INSTALLATION INSTRUCTIONS

Surface Preparation

1. Remove all foreign material by brooming or washing with water. If membrane is very dirty, scrubbing with Weathered Membrane Cleaner may be necessary. This process is essential on membrane that has been exposed for a number of weeks.

   Note: Permeation resistant gloves (that meet ANSI/ISEA 105-2005) are required for hand protection when cleaners or primers are being used.

Application

1. **Mixing is not recommended, even when settling has occurred.**
2. Apply the primer with Scotch-Brite® pads or clean rags. Scrub the area of the membrane (where the Pre-Taped Sheet, Taped Product or Splicing Cement is to be applied) in a circular motion to achieve a thin, even coating on the membrane. The properly cleaned/primed area will be uniform in color without streaks and free of globs or puddles.
3. Note: The use of excessive amounts of Low VOC Primer will not significantly enhance the adhesion of the Pre-Taped or Taped Product to the EPDM or TPO membrane. Use only the amount necessary to obtain 100% coverage of the area where the tape or adhesive will be applied.
4. Allow the Low VOC Primer to dry until it does not transfer to a dry finger touch. Prompt installation of the In-Seam Tape or Taped Product as soon as the primer flashes off minimizes potential dust contamination and promotes adhesion in colder weather.
5. Complete the splice as specified in Mule-Hide's Specifications and Details.

   ** REVIEW CURRENT MULE-HIDE SPECIFICATIONS AND DETAILS FOR SPECIFIC APPLICATION REQUIREMENTS.

Precautions

1. Do not allow primer to over dry or lose tack.
2. Install taped products immediately after primer flashes off and while primer is still tacky.
3. This product is FLAMMABLE. Precautions must be taken to keep the primer away from heat, flame and sparks during storage and use.
4. Avoid contact with eyes and skin.
5. Avoid breathing vapors. Keep container closed when not in use. Use with adequate ventilation. If inhaled, remove to fresh air. If not breathing, perform artificial respiration. If breathing is difficult, give oxygen. Call a physician immediately. During application, efforts must be made to prevent fumes from entering the building via air ventilation ducts. Do not place open containers or mix adhesive near fresh air intake units. When possible, shut down or seal off the closest units.
6. If swallowed, DO NOT INDUCE VOMITING. Call a physician immediately.
7. Chemically-resistant gloves must be worn with Low VOC Primer to protect hands from staining and irritating ingredients.
8. Solids suspended in Low VOC Primer tend to settle and **DO NOT NEED TO BE REMIXED**.. Stirring is not required. Use Low VOC Primer full strength. Do not thin. Thinning will affect performance.
7. Low VOC Primer is not white in color and may cause staining of White-on-Black membrane and other non-black surfaces. For appearance, care should be taken to limit the amount of primer exposed beyond the splice area.

LOW VOC PRIMER

Precautions – continued

8. Due to solvent flash-off, condensation may form on freshly applied Low VOC Primer when the ambient temperature is near the dew point. If condensation develops, the application of primer must be discontinued (proper adhesion will not be obtained). Allow the surface to dry and apply a thin freshener coat of primer to the previously coated surface when conditions allow.

REVIEW THE LOW VOC PRIMER MATERIAL SAFETY DATA SHEET FOR COMPLETE SAFETY INFORMATION PRIOR TO USE.

KEEP OUT OF REACH OF CHILDREN.

STORAGE & HANDLING

Job site storage temperatures in excess of 90ºF (32ºC) may affect product shelf life. Should the primer be stored at temperatures lower than 60ºF (15ºC), restore to room temperature prior to use.

Keep can tightly closed when not in use and protect from moisture contamination. Once exposed to moisture in the air, Low VOC Primer begins to cure and may gel within a few days. A gasket of membrane or sealant can be used to create a positive seal.

PROTECTION & SAFETY

Mule-Hide maintains Material Safety Data Sheets on all of its products. Material Safety Data Sheets contain health and safety information for your development of appropriate product handling procedures to protect your employees and customers. Mule-Hide's Material Safety Data Sheets should be read and understood by all of your supervisory personnel and employees before using Mule-Hide products in your facilities.

ADDITIONAL INFORMATION

The information given on this PDS is subject to change without notice. Always check the Mule-Hide website at www.mulehide.com for the latest information, changes and updates or contact Mule-Hide Products Company at 800-786-1492.

DISCLAIMER

Mule-Hide Products Co., Inc.
1195 Prince Hall Dr.
Beloit, WI 53511

TPO TAPE PRIMER

PRODUCT DESCRIPTION

TPO Tape Primer is a solvent-based product designed for one-step cleaning and priming of TPO surfaces to be bonded with In-Seam Tapes, Uncured Flashing Tapes, Cured Cover Tapes, and Pre-Taped membranes.

BASIC USES

A product designed for one-step cleaning and priming of TPO surfaces prior to the application of Taped Products.

TYPICAL PHYSICAL PROPERTIES

Physical Properties*	
Color	Clear / Translucent
Solids	15%
Flash Point	18ºF (-8ºC)
Packaging	6, 1 gal cans / carton
Shelf Life	1 year in unopened container
Average Weight	6.5 lbs./gallon (2.95kg)

LEED Information	
Pre-consumer Recycled Content	0%
Post-consumer Recycled Content	0%
VOC Content	645 g/l
Manufacturing Location	Michigan Center, MI

*General properties. Typical properties and characteristics are based on samples tested and are not guaranteed for all samples of this product. This data and information is intended as a guide and does not reflect the specification or specification range for any particular property of this product.

BENEFITS & SUPPLEMENTAL STATEMENTS

Promotes excellent adhesion with Tape Products
One step cleaner and primer
Quick flash-off time for faster installation

COVERAGE RATES

Approximately 200 to 250 square feet (19 to 24 square meters) (one surface) per gallon

INSTALLATION TEMPERATURE

If primer is store at temperatures less than 60° F, restore to room temperature (~70° F) before using.

INSTALLATION INSTRUCTIONS

Surface Preparation

1. Remove all foreign material by brooming or washing with water. If membrane is very dirty, scrubbing with Weathered Membrane Cleaner may be necessary. This process is essential on membrane that has been exposed for a number of weeks.
2. The surface to which the TPO Tape Primer is to be applied must be clean and dry.

Note: Permeation resistant gloves (that meet ANSI/ISEA 105-2005) are required for hand protection when cleaners or primers are being used.

TPO TAPE PRIMER

Application

1. Thoroughly stir primer until all settled materials are blended into the solution. Solids suspended in TPO primer will tend to settle; stir the solution frequently during use.

2. Apply the primer with Scotch-Brite® pads or clean rags. Scrub the area of the membrane (where the Pre-Taped Sheet, Taped Product or Splicing Cement is to be applied) in a circular motion to achieve a thin, even coating on the membrane. The properly cleaned/primed area will be uniform in color without streaks and free of globs or puddles. Apply primer to a wider area that the actual splice area to ensure complete coverage.

3. Note: The use of excessive amounts of TPO Primer will not significantly enhance the adhesion of the Pre-Taped or Taped Product to the TPO membrane. Use only the amount necessary to obtain 100% coverage of the area where the tape or adhesive will be applied.

4. Allow TPO Primer to dry until it does not transfer to a dry finger touch. Prompt installation of the In-Seam Tape or Taped Product as soon as the primer flashes off minimizes potential dust contamination and promotes adhesion in colder weather. Drying conditions will vary depending on ambient conditions.

5. Complete the splice as specified in Mule-Hide's Specifications and Details.

   ** REVIEW CURRENT MULE-HIDE SPECIFICATIONS AND DETAILS FOR SPECIFIC APPLICATION REQUIREMENTS.

Precautions

1. Warning – Harmful if swallowed. Flammable liquid. May be irritating to skin and eyes.

2. Wash thoroughly after handling. Avoid contact with eyes, skin and clothing. Use of permeation – resistant gloves (that meet ANSI-ISEA 105-2005) and safety glasses are recommended. Keep away from heat, sparks, motors and open flame. DO NOT SMOKE WHILE USING. Keep lid tightly closed when not in use.

3. If swallowed, DO NOT INDUCE VOMITING. Call physician immediately. In case of eye contact, flush with water for at least 15 minutes. In case of skin contact, wash with soap and water. If irritation develops, call physician.

4. In case of fire, handle as a solvent or gasoline fire. Use a carbon dioxide or foam fire extinguishers. Water fog or spray may be used to smother the fire and cool containers. Do not use a solid stream of water to fight fire because it can scatter and spread the fire.

5. Avoid breather vapors. Keep container closed when not in use. Use with adequate ventilation. If inhaled, remove to fresh air. If not breathing, perform artificial respiration. If breathing is difficult, give oxygen. Call a physician immediately. During application, efforts must be made to prevent fumes from entering the building via air ventilation ducts. Do not place open containers or mix adhesive near fresh air intake units. When possible, shut down or seal off the closest units.

6. Thoroughly stir this product until all settled pigment is blended into the solution. Solids suspended in TPO Tape Primer tend to settle. Use TPO Tape Primer full strength. Do not thin. Thinning will affect performance.

TPO TAPE PRIMER

Precautions (continued)

7. Due to solvent flash-off, condensation may form on freshly applied TPO Tape Primer when the ambient temperature is near the dew point. If condensation develops, the application of primer must be discontinued (proper adhesion will not be obtained). Allow the surface to dry and apply a thin freshener coat of primer to the previously coated surface when conditions allow.

REVIEW THE TPO TAPE PRIMER MATERIAL SAFETY DATA SHEET FOR COMPLETE SAFETY INFORMATION PRIOR TO USE.

KEEP OUT OF REACH OF CHILDREN.

STORAGE & HANDLING

Job site storage temperatures in excess of 90ºF (32ºC) may affect product shelf life. Should the primer be stored at temperatures lower than 60ºF (15ºC), restore to room temperature prior to use.

Keep can tightly closed when not in use and protect from moisture contamination. Once exposed to moisture in the air, TPO Tape Primer begins to cure and may gel within a few days. A gasket of membrane or sealant can be used to create a positive seal.

PROTECTION & SAFETY

Mule-Hide maintains Material Safety Data Sheets on all of its products. Material Safety Data Sheets contain health and safety information for your development of appropriate product handling procedures to protect your employees and customers. Mule-Hide's Material Safety Data Sheets should be read and understood by all of your supervisory personnel and employees before using Mule-Hide products in your facilities.

ADDITIONAL INFORMATION

The information given on this PDS is subject to change without notice. Always check the Mule-Hide website at www.mulehide.com for the latest information, changes and updates or contact Mule-Hide Products Company at 800-786-1492.

DISCLAIMER

Mule-Hide Products Co., Inc.
1195 Prince Hall Dr.
Beloit, WI 53511

MULE-HIDE TPO CUT-EDGE SEALANT

PRODUCT DESCRIPTION

Mule-Hide TPO Cut-Edge Sealant is a thermoplastic compound designed for use at the edge of cut Mule-Hide TPO-c membrane seams after the membrane has been welded to itself or to Mule-Hide TPO Coated Metal.

BASIC USES

Mule-Hide TPO Cut-Edge Sealant is required to seal all cut edges of membrane (seams and flashing) where the reinforcing scrim is exposed to weather.

TYPICAL PHYSICAL PROPERTIES

Typical Properties and Characteristics*	
Base	Synthetic Rubber
Color	Clear
Solids	14%
Viscosity	3,500 cps
Flash Point	39ºF (4ºC)
Net Weight / Gallon	7.4 lbs (3.3 kg)
Resistance to Ozone	Excellent
Resistance to UV	Excellent
Resistance to Water	Excellent
VOC	750 GPL
Packaging	Eight 16 oz. (3.8 L) bottles / carton Or two 8 oz. (1.9 L) bottles
Shelf Life	One Year

* Typical properties and characteristics are based on samples tested and are not guaranteed for all samples of this product. This data and information is intended as a guide and does not reflect the specification or specification range for any particular property of this product.

PACKAGING AND STORAGE

Mule-Hide TPO Cut-Edge Sealant is available in 16 oz. bottles packaged 8 per carton. Job site storage temperatures in excess of 90ºF (32ºC) may affect product shelf life. Should the TPO Cut-Edge Sealant be stored at temperatures below 60ºF (15ºC), restore to room temperature prior to use. Do not allow to freeze.
KEEP OUT OF REACH OF CHILDREN.

BENEFITS & SUPPLEMENTAL STATEMENTS

- Squeeze bottle packaging allows easy, no mess application
- Available in clear for use on various colors of Mule-Hide TPO
- Provides excellent sealing of exposed reinforcement at cut edges of membrane

COVERAGE RATES

Approximately 225’ to 275’ (70 to 80 m) per 16 oz. bottle when applied with 1/8” (3 mm) bead.
Approximately 115’ to 140’ (35 to 40 m) per 8 oz. bottle when applied with 1/8” (3 mm) bead

MULE-HIDE TPO CUT-EDGE SEALANT

INSTALLATION INSTRUCTIONS

1. All surfaces to be sealed with Cut-Edge Sealant must be clean, dry and free from oil, grease, dirt and other foreign materials.
2. Apply 1a⁄8" (3 mm) bead of Cut-Edge Sealant from the plastic squeeze bottle to seal cut edges of reinforced Sure-Weld Membrane. Do not apply Cut-Edge Sealant on vertical surfaces.
3. Sealant should be tack-free in 2 hours and fully cured in 24 hours depending on weather conditions and application thickness.
   Review Mule-Hide specifications and details for complete installation information.

PRECAUTIONS

1. Review the applicable Material Safety Data Sheets for complete safety information.
2. TPO Cut-Edge Sealant is FLAMMABLE – it contains solvents that are dangerous fire and explosion hazards when exposed to heat, flame or spark. Do not smoke while applying. Do not use in a confined area or unventilated area. Vapors are heavier than air and may travel along the ground to a distant ignition source and flashback.
3. Avoid breathing vapors. Keep container closed when not in use. Use with adequate ventilation. If inhaled, remove to fresh air. If not breathing, perform artificial respiration. If breathing is difficult, give oxygen. Call a physician immediately.
4. If swallowed, DO NOT INDUCE VOMITING. Call a physician immediately
5. Avoid contact with eyes. Safety glasses or goggles are recommended. If splashed in eyes, immediately flush eyes with plenty of water for at least 15 minutes. Contact a physician immediately.
6. Avoid contact with skin. Permeation-resistant gloves (that meet ANSI/ ISEA 105-2005) recommended. Wash thoroughly after handling. In case of contact with skin, thoroughly wash affected area with soap and water.
7. Jobsite storage temperatures in excess of 90°F (32°C) may affect product shelf life. Should the Cut-Edge Sealant be stored at temperatures below 60°F (15°C), restore to room temperature prior to use.
8. KEEP OUT OF THE REACH OF CHILDREN

PROTECTION & SAFETY

Mule-Hide maintains Material Safety Data Sheets on all of its products. Material Safety Data Sheets contain health and safety information for your development of appropriate product handling procedures to protect your employees and customers. Mule-Hide's Material Safety Data Sheets should be read and understood by all of your supervisory personnel and employees before using Mule-Hide products in your facilities.

ADDITIONAL INFORMATION

The information given on this PDS is subject to change without notice. Always check the Mule-Hide website at www.mulehide.com for the latest information, changes and updates or contact Mule-Hide Products Company at 800-786-1492.

DISCLAIMER

Mule-Hide Products Co., Inc.
1195 Prince Hall Dr.
Beloit, WI 53511

MULE-HIDE TPO COVER STRIP

PRODUCT DESCRIPTION

TPO Cover Strip is a nominal 30-mils (0.76 mm) thick non-reinforced TPO membrane laminated to a nominal 30-mil (0.76 mm) thick, fully cured synthetic rubber pressure sensitive adhesive. TPO Cover Strip is available in 6" wide (152 mm) x 100' (30.5 m) long rolls and in three colors – white, gray and tan.

BASIC USES

TPO Cover Strip is intended to strip in flat metal flanges (i.e. drip edge or self- flashing curb flanges) or rows of fasteners and plates. TPO Cover Strips cannot be used for flashing corners, pipes, T-joints, butt joints on TPO Fleece Back membrane or any angled metal flanges such as gravel stops or other canted metal edgings.

SPECIFICATIONS

Typical Properties and Characteristics*		
Colors	White, Tan and gray	
Tensile Strength, psi (MPa)	ASTM D412	2,500 (17.2) minimum 2,900 (20.0) typical
Elongation, %	ASTM D412	600 minimum 750 typical
Hardness, Shore A	ASTM D2240	Typical 80
Base	Membrane – Non-reinforced TPO Adhesive – Synthetic Rubber with clear release liner	
Solids	100%	
Nominal Thickness:	0.060" (1.52 mm)	
Nominal Width	Membrane – 6" (152 mm) Adhesive – 6 ¼" (159 mm)	
Nominal Length	100 ft (30.5 m)	
Net Weight per Roll	22 lbs (10 kg)	
Shelf Life	One year	
* Typical properties and characteristics are based on samples tested and are not guaranteed for all samples of this product. This data and information is intended as a guide and does not reflect the specification range for any particular property of this product.		

PACKAGING

2 rolls per carton
22 lbs (10 kg) per roll

BENEFITS & SUPPLEMENTAL STATEMENTS

- Adhesive is compatible with a variety of metal finishes
- Offers fast, easy installation with no welding

INSTALLATION TEMPERATURE

If product is exposed to cold temperatures restore to room temperature (~60ºF (15ºC)) prior to use.

MULE-HIDE TPO COVER STRIP

INSTALLATION INSTRUCTIONS

1. Clean the existing membrane (and metal if applicable) with Weathered Membrane Cleaner and natural fiber rags. A Scotch-Brite® Pad may be necessary to remove a heavy build-up of dirt. Pour a small amount of Weathered Membrane Cleaner over a primer pad and rub area to be flashed in a circular motion. Wipe away residual dirt with clean rags
2. Using a clean Scotch-Brite® Pad, apply Tape Primer to the area of the membrane to be flashed. The properly primed area will be uniform in color without streaks and free of globs or puddles.
3. The entire surface where the flashing will be applied must be clean. The adhesive on the back of the TPO Cover Strip will not adhere to dusted/dirty surfaces. Any residual surface contamination will be detrimental to the bond strength of the adhesive.
4. Install cover strip immediately after the Tape Primer flashes off to minimize potential dust contamination and to promote adhesion in colder weather.
5. Peel off 10-12" (250-300 mm) of the protective release liner from the TPO Cover Strip. Position the flashing over the area to be covered and press down using firm, even hand pressure across the entire area. Continue this process until the full area to be flashed is completed. (Cut-Edge Sealant is not required along edges of the TPO Cover Strip).
6. Immediately roll the TPO Cover Strip with a 2" (50-mm) wide neoprene roller using positive pressure. Roll across the cover strip edge, not parallel to it. **In areas where the TPO Cover Strip crosses a metal joint, a membrane seam (T-joint) or at an end lap use a hot air gun to heat the top surface (TPO membrane) of the TPO Cover Strip and crease the material into the step-off.** This process reduces the possibility of a water channel forming.
7. To achieve proper adhesion of the TPO Cover Strip when job site temperatures fall below 40°F (5°C), heat the cleaned/primed area of the membrane with a hot air gun as the flashing is applied and pressed into place.

PRECAUTIONS

1. TPO Cover Strip cannot be used for flashing corners, pipes, T-Joints, butt joints on Fleece Back membranes or any angled metal flanges such as canted metal edging.
2. Avoid prolonged contact with skin. In case of contact with skin, thoroughly wash affected area with soap and water.
3. Prolonged job site storage temperatures in excess of 90º F (32º C) may affect product shelf life.
4. In warm sunny weather, keep TPO Cover Strip in original packaging or in a shaded area prior to use.
5. TPO Cover Strip must be stored in a dry area.
6. Due to solvent flash-off, condensation may form on freshly applied Tape Primer when the ambient temperature is near the dew point. If condensation develops, the application of Tape Primer and TPO Cover Strip must be stopped since proper adhesion will not be achieved. Allow the affected surface to dry and apply a thin freshening coat of Tape Primer to the previously (affected) coated surface and apply TPO Cover Strip when conditions allow.
7. Do not allow waste products (petroleum, grease, oil, solvents, vegetable or mineral oil, animal fats, etc.) or direct steam venting to come in contact with the TPO Cover Strip.

STORAGE & HANDLING

Storage and use of TPO Cover Strip at temperatures below 40ºF (4º C) will result in a loss of adhesive tack, and in extreme cases, will result in no bond to the substrate. Overnight storage must be available to keep the temperature of the TPO Cover Strip at a minimum of 60º F (15º C). Hot boxes for job site storage must be provided to maintain a minimum product temperature of 40º F (4º C).

PROTECTION & SAFETY

MULE-HIDE TPO COVER STRIP

Mule-Hide maintains Material Safety Data Sheets on all of its products. Material Safety Data Sheets contain health and safety information for your development of appropriate product handling procedures to protect your employees and customers. Mule-Hide's Material Safety Data Sheets should be read and understood by all of your supervisory personnel and employees before using Mule-Hide products in your facilities.

ADDITIONAL INFORMATION

The information given on this PDS is subject to change without notice. Always check the Mule-Hide website at www.mulehide.com for the latest information, changes and updates or contact Mule-Hide Products Company at 800-786-1492.

DISCLAIMER

The statements provided concerning the material shown are intended as a guide for material usage and are believed to be true and accurate at the time of printing. No statement made by anyone may supersede this information, except when done in writing by Mule-Hide Products Co., Inc. Since the manner of use is beyond our control, Mule-Hide does not authorize anyone to make any warranty of merchantability or fitness for any particular purpose or any other warranty, guarantee or representation, expressed or implied, concerning this material. This product may be eligible for a Mule-Hide warranty, please check the Mule-Hide website at www.mulehide.com or contact Mule-Hide directly at 800-786-1492 for details. Buyer and user accept the product under these conditions and assume the risk of any failure, any injury person or property (including that of the user), loss or liability resulting from the handling, storage or use of the product whether or not it is handled, stored or used in accordance with the directions or specifications. Mule-Hide must be notified in writing of any claims and be given the opportunity to inspect the alleged failure before repairs are made.

Mule-Hide Products Co., Inc.
1195 Prince Hall Dr.
Beloit, WI 53511

PRODUCT DATA SHEET
PDS 09-4110
Revision Date: FEB-2014

MULE-HIDE TPO .045 REINFORCED 6” X 100’

PRODUCT DESCRIPTION

Mule-Hide TPO .045 Reinforced 6” X 100’ flashing strips are strips of reinforced, .045” thick TPO membrane.

BASIC USES

Mule-Hide TPO .045 Reinforced 6” X 100’ flashing strips are primarily used as cover strips over end lap joints of fleece-backed membrane. The TPO flashing strips may also be used to flash over TPO Coated Metal joints and to strip-in coated metal flanges. The reinforced TPO flashing strips may be used for general repairs where reinforced material is required.

TYPICAL PHYSICAL PROPERTIES

Colors:	(Standard) White
	(Special Colors) Gray and Tan
Thickness:	.045-inch (nominal) thick, TPO reinforced material
Size:	6” wide by 100' long

See Product Data Sheet for TPO Standard membrane for complete listing of physical properties.

PACKAGING

Mule-Hide TPO .045 Reinforced flashing strips should be stored in a clean, dry area and protected from extreme temperatures. TPO .045 Reinforced is packaged 3 rolls per carton.

INSTALLATION INSTRUCTIONS

Mule-Hide TPO .045 Reinforced flashing strips shall be installed by heat welding. Refer to Mule-Hide Details published in the Mule-Hide TPO Specification Manual.

PROTECTION & SAFETY

Mule-Hide maintains Material Safety Data Sheets on all of its products. Material Safety Data Sheets contain health and safety information for your development of appropriate product handling procedures to protect your employees and customers. Mule-Hide's Material Safety Data Sheets should be read and understood by all of your supervisory personnel and employees before using Mule-Hide products in your facilities.

ADDITIONAL INFORMATION

The information given on this PDS is subject to change without notice. Always check the Mule-Hide website at www.mulehide.com for the latest information, changes and updates or contact Mule-Hide Products Company at 800-786-1492.

DISCLAIMER

Mule-Hide Products Co., Inc.
1195 Prince Hall Dr.
Beloit, WI 53511

MULE-HIDE TPO FLASHING (.060 NON-REINFORCED)

PRODUCT DESCRIPTION

Mule-Hide TPO Flashing is a .060" (60 mil) thick (nominal), non-reinforced TPO (polyolefin-based) membrane.

BASIC USES

The Mule-Hide TPO Flashing is primarily used to seal details where field fabrication is necessary, such as drain details, pipe flashings, pitch pocket flashings, seaming joints of the Mule-Hide TPO Coated Metal, and any place where reinforced membrane is not practical.

TYPICAL PHYSICAL PROPERTIES

Typical Properties and Characteristics*		
Property	ASTM Test Method	Specification
Tolerance on nominal thickness	D 412	+15% / -10%
Weight, typical		0.30 lb/ft^2 (1.5 kg/m^2)
Elongation	D 412 Die C	Ultimate 1500%, Minimum 10.3%
Tear strength	D 624 Die c	Minimum 300 lbf/in (52.3 kN/m)
Ozone resistance, 168 hr @ 100 pphm, 50% ext	D 1149	No Cracks
Heat aging: 28 days @ 240ºF (116ºC)	D 573	
- Tensile strength, minimum	D 412	1400 psi (9.7 MPa)
- Elongation, ultimate	D 412	400%
- Tear strength, minimum	D624	250 lbf/in (43.8 kN/m)
- Linear dimensional change, maximum	D 1204	±4%
Resistance to Xenon-arc weathering	G26	No Cracks
- Xenon-Arc, 5040 kJ/m^2 total radiant	0.70 W/m^2	
- Exposure, visual condition at 10X	80ºC B.P.T.	
* Typical properties and characteristics are based on samples tested and are not guaranteed for all samples of this product. This data and information is intended as a guide and does not reflect the specification or specification range for any particular property of this product.		

COLORS

Standard color is White. Special colors are Gray and Tan.

PACKAGING

12” x 50’ Rolls, 1 Roll per Carton, 17 lbs
24” x 50’ Rolls, 1 Roll per Carton, 33 lbs

INSTALLATION INSTRUCTIONS

1. Mule-Hide TPO Flashing is used to flash a variety of roofing structures and penetrations and specific installation methods will vary. Refer to the appropriate Mule-Hide specification and/or detail for specific installation information.
2. A lower heat setting is required on the heat welder when hot air welding the un-reinforced flashing membrane. A typical starting setting is 6, on a scale of 1 to10.
3. Use the edge of the roller to crease the flashing into any membrane step-offs to achieve a proper seal.

MULE-HIDE TPO FLASHING (.060 NON-REINFORCED)

PRECAUTIONS

1. Review the applicable Material Safety Data Sheet for complete safety information prior to use.
2. UV filtering sunglasses are strongly recommended when working with Mule-Hide TPO roofing systems.
3. Store Mule-Hide TPO Flashing in a cool, shaded area and cover with light-colored, breathable, waterproof tarpaulins.
4. TPO Flashing material that has been exposed to the weather for approximately 7 days or longer prior to use must be prepared with Weather Membrane Cleaner prior to hot-air welding.

PROTECTION & SAFETY

Mule-Hide maintains Material Safety Data Sheets on all of its products. Material Safety Data Sheets contain health and safety information for your development of appropriate product handling procedures to protect your employees and customers. Mule-Hide's Material Safety Data Sheets should be read and understood by all of your supervisory personnel and employees before using Mule-Hide products in your facilities.

ADDITIONAL INFORMATION

The information given on this PDS is subject to change without notice. Always check the Mule-Hide website at www.mulehide.com for the latest information, changes and updates or contact Mule-Hide Products Company at 800-786-1492.

DISCLAIMER

The statements provided concerning the material shown are intended as a guide for material usage and are believed to be true and accurate at the time of printing. No statement made by anyone may supersede this information, except when done in writing by Mule-Hide Products Co., Inc. Since the manner of use is beyond our control, Mule-Hide does not authorize anyone to make any warranty of merchantability or fitness for any particular purpose or any other warranty, guarantee or representation, expressed or implied, concerning this material. This product may be eligible for a Mule-Hide warranty, please check the Mule-Hide website at www.mulehide.com or contact Mule-Hide directly at 800-786-1492 for details. Buyer and user accept the product under these conditions and assume the risk of any failure, any injury person or property (including that of the user), loss or liability resulting from the handling, storage or use of the product whether or not it is handled, stored or used in accordance with the directions or specifications. Mule-Hide must be notified in writing of any claims and be given the opportunity to inspect the alleged failure before repairs are made.

Mule-Hide Products Co., Inc.
1195 Prince Hall Dr.
Beloit, WI 53511

PRODUCT DATA SHEET
PDS 09-4205
Revision Date: Jan-2014

MOLDED SEALANT POCKETS

PRODUCT DESCRIPTION

Mule-Hide Molded Sealant Pockets are Interlocking, two-piece prefabricated pockets of non-reinforced TPO material used to seal pipe clusters or other irregular shaped penetrations. Pockets length can be adjusted from 7 ½" to 11 ½" by following the pre-molded cutting lines.

BASIC USES

Mule-Hide Molded Sealant Pockets are ideal for sealing irregular, hard to flash penetrations in a Mule-Hide system.

BENEFITS & SUPPLEMENTAL STATEMENTS

- Provides a reliable, cost saving method to waterproof odd shaped penetrations
- Pockets are easily adjustable by cutting on pre-molded cutting lines.
- Larger pockets can be created with the use of pocket extensions

SPECIFICATIONS

Color:	White, Gray, Tan
Size:	11.5" to 7.5" length by 6" oval (29 cm to 19 cm by 15 cm)
Packaging:	5 Pockets per carton
Weight:	0.75 lbs each (0.34 kg)

Typical properties and characteristics are based on samples tested and are not guaranteed for all samples of this product. This data and information is intended as a guide and does not reflect the specification or specification range for any particular property of this product.

INSTALLATION INSTRUCTIONS

1. Place Molded Sealant Pocket around penetration to determine if pocket requires re-sizing. Pocket must maintain a minimum 1" clearance from penetrations. Pocket can be reduced in size by cutting on pre-molded cut lines or enlarged by using pocket extensions.
2. Clean all surfaces of the Molded Sealant Pocket that will be heat welded, along with all inside surfaces that will contact sealer with Weathered Membrane Cleaner.
3. Using Weathered Membrane Cleaner, also clean surface of membrane to which sealant pocket will be welded, along with surface of penetration(s). Use a primer pad with the cleaner if membrane surface has been exposed for an extended period of time.
4. Place Molded Sealant Pocket around penetration(s), overlapping the two sections of the pocket.
5. Place a piece of cardboard (approximately 4" x 4") between the overlapped are of the Sealant Pocket and the field membrane. Cardboard will help prevent Sealant Pocket from becoming welded to membrane when overlaps are first welded.
6. Using a hand welder, weld the angle change in the overlap area. Use of a seam probe may assist in making this weld. Hand welder temperature is typically set between 5 or 6 for this step.
7. Hand weld the remainder of the horizontal overlap.
8. Repeat steps 4 – 6 to weld the overlap on opposite side of the Sealant Pocket.
9. Position Sealant Pocket so that vertical overlap is against the penetration. This will facilitate heat welding of vertical seam by allowing proper pressure to be applied with 2" silicon roller.
10. Weld both vertical overlaps starting at the angle change and working to the top of the pocket.
11. Position Sealant Pocket in final location and hold in place with tack welds on all four side of flange.
12. Weld entire deck flange to the deck membrane.

MOLDED SEALANT POCKETS

INSTALLATION INSTRUCTIONS (continued)

13. Allow welds to completely cool and then check with seam probe. Make any repairs as needed.
14. Make sure all voids or openings between the penetration(s) and membrane inside the pocket are sealed (use caulk or tape for sealing) before filling pocket. Openings will allow sealer to penetrate into the deck and possibly the building.
15. Apply a thin coat of Tape Primer to interior surfaces and top rim of Sealant Pocket and to the deck membrane enclosed by the pocket. Also apply Tape Primer to the penetration, extending a minimum of 1" above final level of sealer
16. Complete fill Sealant Pocket with Thermoplastic One-Part Sealer. Ensure that sealer is in contact with top rim of Sealant Pocket.

PRECAUTIONS

1. Maximum temperature of penetration(s) cannot exceed 160ºF (71ºC).
2. All surfaces coming in contact with sealer must be first cleaned with Weathered Membrane Cleaner, and then primed with Tape Primer.
3. Mule-Hide Thermoplastic One-Part Sealer must completely fill the sealant pocket.
4. There must be a minimum clearance of 1" between sealer pocket and penetration(s).
5. When working on a Mule-Hide TPO roofing system, it is recommended that UV filtering sunglass be worn.
6. Sealant Pockets or TPO membrane that has been exposed to the weather must be first cleaned with Weathered Membrane Cleaner prior to heat welding. Use a primer pad with the cleaner if surfaces have been exposed for an extended period of time.

STORAGE & HANDLING

Store sealant pockets in a cool, shaded area and cover with light-colored, breathable, waterproof tarpaulins.

PROTECTION & SAFETY

Mule-Hide maintains Material Safety Data Sheets on all of its products. Material Safety Data Sheets contain health and safety information for your development of appropriate product handling procedures to protect your employees and customers. Mule-Hide's Material Safety Data Sheets should be read and understood by all of your supervisory personnel and employees before using Mule-Hide products in your facilities.

ADDITIONAL INFORMATION

The information given on this PDS is subject to change without notice. Always check the Mule-Hide website at www.mulehide.com for the latest information, changes and updates or contact Mule-Hide Products Company at 800-786-1492.

DISCLAIMER

Mule-Hide Products Co., Inc.
1195 Prince Hall Dr.
Beloit, WI 53511

PRODUCT DATA SHEET
PDS 09-4305
Revision Date: Feb-2012

MULE-HIDE TPO PIPE SEALS

PRODUCT DESCRIPTION

Mule-Hide TPO Pipe Seals are an injection molded, pre-formed flashing for pipes made of Mule-Hide non-reinforced TPO material. They are designed to add ease to the installation process while offering increased watertight security and improved aesthetics.

BASIC USES

Mule-Hide TPO Pipe Seals are designed as an economical flashing for single pipe penetrations on Mule-Hide TPO-c Membrane roof systems. TPO Pipe Seals can be used wherever the TPO Pipe Seals may be slipped over the top of the pipe.

TYPICAL PHYSICAL PROPERTIES

Typical Properties and Characteristic	
Sizes	¾" to 8" od (19.0 to 203.2 mm)
Packaging	8 per box
Weight (each)	0.63 lbs (0.3 kg)
Material	Injection molded TPO
Color	White, gray and tan
Service Temp	Max 160°F (71°C)

BENEFITS & SUPPLEMENTAL STATEMENTS

Provides a reliable method of waterproofing round pipe penetrations
Offers substantial labor savings when compared to field fabrication

INSTALLATION INSTRUCTIONS

1. Remove all existing lead and other flashings.
2. Temperature of pipe must not exceed 160°F (71°C)
3. Cut pipe seal to the desired diameter by cutting between two raised 'ribs' as illustrated on flange of pipe seal. (Do not cut off both raised 'ribs')
4. Pull pipe seal over pipe until base flange is in contact with the membrane. Top portion of pipe seal may be heated to facilitate installation.
5. Mark pipe around top of pipe seal.
6. Pull pipe seal upward until mark on pipe is visible.
7. For mechanically attached systems, install seam plates and fasteners at base of projection. Seam plates must fit inside flange of pipe seal.
8. Install Water Cut-off Mastic below mark on pipe.
9. Pull pipe seal back down over pipe and into position with flange contacting membrane.
10. Heat weld pipe seal to field membrane. Hand gun should be set between 6 and 7.
11. Install stainless steel clamping ring at top of pipe seal to ensure constant compression of the sealant. Do not over tighten clamp.

STORAGE & HANDLING

Store pre-molded pipe seals in a cool, shaded area and cover with a light-colored breathable, waterproof tarpaulin. Pipe seals that have been exposed to the elements must be prepared with weathered membrane cleaner prior to heat welding.

MULE-HIDE TPO PIPE SEALS

PROTECTION & SAFETY

Mule-Hide maintains Material Safety Data Sheets on all of its products. Material Safety Data Sheets contain health and safety information for your development of appropriate product handling procedures to protect your employees and customers. Mule-Hide's Material Safety Data Sheets should be read and understood by all of your supervisory personnel and employees before using Mule-Hide products in your facilities.

ADDITIONAL INFORMATION

Copper Tubing (C.T.S.)											
Nominal Tube Size	¾”	1”	1 ¼”	1 ½”	2”	2 ½”	3”	4”	5”	6”	8”
Pipe O.D.	0.88	1.13	1.38	1.63	2.13	2.63	3.13	4.13	5.13	6.13	N/A
Step of Boot Used	1	1	1	1 ½	2	2	3	4	5	6	N/A
Schedule 40 / 80 Steep Pipe – PVC Standard – Polyethylene Pipe IPS											
Nominal Pipe Size	¾”	1”	1 ¼”	1 ½”	2”	2 ½”	3”	4”	5”	6”	8”
Pipe O.D.	1.05	1.32	1.66	1.90	2.38	2.88	3.50	4.50	5.56	6.63	8.63
Step of Boot Used	1	1	1 ½	1 ½	2	3	3	4	5	6	8
Cast Iron Pipe	**Pit Class A & Spun 100-250**					**Pit Class B, C & D**					
Nominal Pipe Size	2”	3”	4”	6”	8”	2”	3”	4”	6”	8”	
Pipe O.D.	2.50	3.96	4.80	6.90	9.50	N/A	3.96	5.00	7.10	9.30	
Step of Boot Used	2	4	5	6	N/A	N/A	4	5	6	N/A	
Sewer Soil Pipe-PVC Plastic SFR 34 & 41-Cast Iron Soil Pipe no hub-service weight and extra heavy											
Nominal Pipe Size	4”				6”				8”		
Pipe O.D.	4.22 to 4.62				6.28 to 6.62				8.40 to 8.75		
Step of Boot Used	4				6				8		
Conduit EMT											
Nominal Pipe Size	¾”	1”	1 ¼”	1 ½”	2”	2 ½”	3”	3 ½”	4”		
Pipe O.D.	0.922	1.16	1.51	1.74	2.19	2.88	3.50	4.00	4.50		
Step of Boot Used	1	1	1	1 ½	2	3	3	4	4		
Conduit IMC											
Nominal Pipe Size	¾”	1”	1 ¼”	1 ½”	2”	2 ½”	3”	3 ½”	4”		
Pipe O.D.	1.02	1.29	1.63	1.88	2.36	2.85	3.47	3.97	4.46		
Step of Boot Used	1	1	1 ½	1 ½	2	3	3	4	4		
Conduit Rigid											
Nominal Pipe Size	¾”	1”	1 ¼”	1 ½”	2”	2 ½”	3”	3 ½”	4”	5”	
Pipe O.D.	1.05	1.32	1.66	1.90	2.37	2.87	3.50	4.00	4.50	5.56	
Step of Boot Used	1	1	1 ½	1 ½	2	3	3	4	4	5	

The information given on this PDS is subject to change without notice. Always check the Mule-Hide website at www.mulehide.com for the latest information, changes and updates or contact Mule-Hide Products Company at 800-786-1492.

DISCLAIMER

The statements provided concerning the material shown are intended as a guide for material usage and are believed to be true and accurate at the time of printing. No statement made by anyone may supersede this information, except when done in writing by Mule-Hide Products Co., Inc. Since the manner of use is beyond our control, Mule-Hide does not authorize anyone to make any warranty of merchantability or fitness for any particular purpose or any other warranty, guarantee or representation, expressed or implied, concerning this material. This product may be eligible for a Mule-Hide warranty, please check the Mule-Hide website at www.mulehide.com or contact Mule-Hide directly at 800-786-1492 for details. Buyer and user accept the product under these conditions and assume the risk of any failure, any injury person or property (including that of the user), loss or liability resulting from the handling, storage or use of the product whether or not it is handled, stored or used in accordance with the directions or specifications. Mule-Hide must be notified in writing of any claims and be given the opportunity to inspect the alleged failure before repairs are made.

Mule-Hide Products Co., Inc.
1195 Prince Hall Dr.
Beloit, WI 53511

PRODUCT DATA SHEET
PDS 09-4320
Revision Date: FEB-2014

MULE-HIDE TPO SPLIT PIPE SEALS

PRODUCT DESCRIPTION

TPO Split Pipe Seals are fabricated flashings made of 45-mil reinforced TPO-c membrane for pipes 1-inch (25.4 mm) to 6-inches (152.4 mm) in diameter. They are designed to add ease to the installation process while offering increased watertight security and improved aesthetics

BASIC USES

The TPO Split Pipe Seals contains a split (cut) and overlap tab that allows the pipe-boot to be opened and wrapped around a round pipe with an obstruction. Such obstructions prevent the use of a standard pre-molded pipe boot.

TYPICAL PHYSICAL PROPERTIES

Color:	White
Sizes Available:	1", 2", 3", 4", 5" and 6" O.D. Pipe (25.4, 50.8, 76.2, 101.6, 127.0 and 152.4 mm)
Weight per Carton:	8 lbs (3.6 kg)
Material:	Reinforced 45-mil TPO membrane
Packaging:	8 per carton

BENEFITS

- Offers substantial labor savings when compared to field fabricated flashings
- Provides a uniform, consistent appearance
- Simplifies the field installers job when flashing a pipe next to an obstruction
- Provides a reliable method of waterproofing round pipe penetrations

INSTALLATION INSTRUCTIONS

1. Clean the penetration to eliminate any rust or scale and wipe with a Splice Wipe saturated with Weathered Membrane Cleaner.
2. Confirm the outside diameter of the pipe. The nominal diameter of the Split Pipe Seal indicates the maximum size the part will effectively fit. Each Split Pipe Seal can accommodate a pipe that is 1-inch smaller in outside diameter. For example, a 2-inch Split Pipe Seal can be utilized to flash pipes ranging from 1-1/6” in diameter up to 2” in diameter.
3. Open the Split Pipe Seal and pulling apart the tack welds located on the vertical leg of the flashing.
4. Wrap the Slit Pipe Seal around the pipe until the vertical leg is tight against the outside diameter of the pipe penetration.
5. Mark the pipe around the top of the Split Pipe Seal.
6. Remove the Split Pipe Seal from around the pipe.
7. Install Water Cut-Off Mastic below the mark indicating the top of the installed Split Pipe Seal.
8. Wrap the Split Pipe Seal back around the penetration until the vertical leg is tight against the outside diameter of the pipe penetration.
9. Tack weld the back edge of the Split Pipe Seal vertical leg ensuring that good contact is maintained between the Split Pipe Seal and the pipe. This process will hold the Split Pipe Seal in place.
10. Heat-weld the entire width of the vertical overlap. Hand roll against the outer surface of the pipe to create the pressure necessary to achieve an acceptable weld.
11. Heat-weld the base flange to the deck membrane and complete the horizontal overlap weld.
12. Once the flashing has completely cooled, check all splices for voids and cold welds. Make any needed repairs.

MULE-HIDE TPO SPLIT PIPE SEALS

INSTALLATION INSTRUCTIONS (Continued)

13. Install a stainless steel universal clamping ring to provide constant compression of the sealant.
14. Apply Cut-Edge Sealant to all edges of the pipe-seal that are located on the horizontal plane. Do not apply the sealant to vertical surfaces.
    Refer to Mule-Hide Specifications and details for installation information.

PRECAUTIONS

1. All lead and other flashings must be removed prior to installation.
2. Temperature of pipe penetration must not exceed 160ºF (71ºC).
3. For mechanically attached systems, install a minimum of four fastening plates equally spaced around base of pipe projections. Plates must be completely covered by the flange of the Split Pipe Boot and allow for a minimum 1 ½" wide heat weld. If plates cannot be installed to allow a minimum 1 ½" wide heat weld, install the plated outside of the Split Pipe Seal flange and cover with a target patch of TPO field membrane with heat welded seams.

STORAGE & HANDLING

Store Split Pipe Seals in a cool, shaded area and cover with light-colored, breathable, waterproof tarpaulins. Mule-Hide TPO Split Pipe Seals or membrane that have been exposed to the weather prior to use must be prepared with Weathered Membrane Cleaner prior to hot air welding.

PROTECTION & SAFETY

Mule-Hide maintains Material Safety Data Sheets on all of its products. Material Safety Data Sheets contain health and safety information for your development of appropriate product handling procedures to protect your employees and customers. Mule-Hide's Material Safety Data Sheets should be read and understood by all of your supervisory personnel and employees before using Mule-Hide products in your facilities.

ADDITIONAL INFORMATION

The information given on this PDS is subject to change without notice. Always check the Mule-Hide website at www.mulehide.com for the latest information, changes and updates or contact Mule-Hide Products Company at 800-786-1492.

DISCLAIMER

Mule-Hide Products Co., Inc.
1195 Prince Hall Dr.
Beloit, WI 53511

PRODUCT DATA SHEET
PDS 09-4325
Revision Date: FEB-2014

MULE-HIDE TPO SQUARE TUBING WRAP

PRODUCT DESCRIPTION

TPO Square Tubing Wraps are fabricated square penetration flashings made of white 45 mil reinforced TPO-c membrane. Overall height of the flashings is 11 inches. A split (cut) and overlap tab are incorporated into these parts to allow the flashings to be opened and wrapped around a square penetration with an obstruction. TPO Square Tubing Wraps are packaged in boxes of eight and include the necessary pressure sensitive tape to complete the topside termination.

BASIC USES

The Mule-Hide TPO Square Tubing Wraps are primarily used to seal details where field fabrication is necessary, such as drain details, pipe flashings and pitch pocket flashings.

TYPICAL PHYSICAL PROPERTIES

Typical Properties and Characteristics*	
Sizes	3” x 3” (76 mm x 76 mm)
	4” x 4” (102 mm x 102 mm)
	6” x 6” (152 mm x 152 mm)
Thickness	45 mil TPO membrane
Color	White

LEED Information	
Pre-consumer Recycled Content	0%
Post-consumer Recycled Contend	0%
Manufacturing Location	Eugene, OR
Solar Reflectance Index (SRI)	N/A

PACKAGING

8 per carton – 8lbs per carton

BENEFITS & SUPPLEMENTAL STATEMENTS

- Offers substantial labor savings compared to field fabricated flashings
- Reliable method of waterproofing square tubing penetrations
- Provides a more consistent professional appearance compared to field fabricated flashings

INSTALLATION INSTRUCTIONS

1. Clean the penetration to eliminate any rust or scale and wipe with a Splice Wipe saturated with Weathered Membrane Cleaner.
2. Open the Square Tubing Wrap and pull apart the tack welds located on the vertical leg of the flashing.
3. Wrap the Square Tubing Wrap around the penetration until the vertical leg is tight against the penetration.
4. Mark the penetration ¼” above the top of the Square Tubing Wrap.
5. Remove the TPO Square Tubing Wrap from around the penetration.
6. Prime a 3"-wide area of the tubing directly below the previously made mark as well as the corresponding area of the Square Tube Wrap with Tape Primer.
7. Wrap a piece of 3"-wide In-Seam Tape (included in the box) around the penetration at the mark made previously. The In-seam Tape should overlap approximately 1".
8. Wrap the TPO Square Tubing Wrap around the penetration until the vertical leg is tight against the penetration. Use a 2" roller to roll the membrane into the In-Seam Tape.
9. Tack-weld the back edge of the TPO Square Tubing Wrap’s vertical leg, ensuring that good contact is maintained between the tubing wrap and the penetration. This process will hold the TPO Square Tubing Wrap in place.

MULE-HIDE TPO SQUARE TUBING WRAP

INSTALLATION INSTRUCTIONS (Continued)

10. Heat-weld the entire width of the vertical overlap. Hand roll against the outer surface of the penetration to create the pressure necessary to achieve an acceptable weld.
11. Heat-weld the base flange to the deck membrane and complete the horizontal overlap weld.
12. Once the flashing has completely cooled, check all splices for voids and cold-welds. Make any needed repairs.
13. Apply a bead of Universal Single-Ply Sealant at the top of the tubing wrap so the seam tape and the top of the TPO Square Tubing Wrap is covered with sealant.
14. Apply Cut-Edge Sealant to all edges of the Square Tubing Wrap that are located on the deck. Do not apply the sealant to vertical surfaces.
    Review Mule-Hide specifications and details for installation information.

PRECAUTIONS

1. All lead and other flashings must be removed prior to installation.
2. Temperature of penetration must not exceed 160ºF (71ºC).
3. For mechanically attached systems, install a minimum of four fastening plates equally spaced around base of pipe projections. Plates must be completely covered by the flange of the Split Pipe Boot and allow for a minimum 1 ½" wide heat weld. If plates cannot be installed to allow a minimum 1 ½" wide heat weld, install the plated outside of the Split Pipe Seal flange and cover with a target patch of TPO field membrane with heat welded seams.

STORAGE & HANDLING

Store TPO Square Tubing Wraps in a cool, shaded area and cover with light-colored, breathable, waterproof tarpaulins. Mule-Hide TPO Square Tubing Wraps or membrane that have been exposed to the weather prior to use must be prepared with Weathered Membrane Cleaner prior to hot air welding.

PROTECTION & SAFETY

Mule-Hide maintains Material Safety Data Sheets on all of its products. Material Safety Data Sheets contain health and safety information for your development of appropriate product handling procedures to protect your employees and customers. Mule-Hide's Material Safety Data Sheets should be read and understood by all of your supervisory personnel and employees before using Mule-Hide products in your facilities.

ADDITIONAL INFORMATION

The information given on this PDS is subject to change without notice. Always check the Mule-Hide website at www.mulehide.com for the latest information, changes and updates or contact Mule-Hide Products Company at 800-786-1492.

DISCLAIMER

Mule-Hide Products Co., Inc.
1195 Prince Hall Dr.
Beloit, WI 53511

MULE-HIDE TPO PRESURE-SENSITIVE RUSS™ (6")

PRODUCT DESCRIPTION

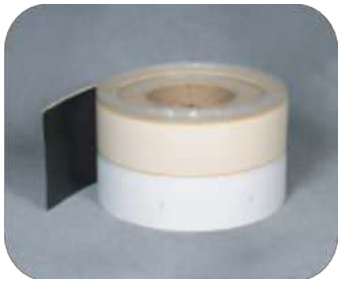

TPO Pressure-Sensitive RUSS is a nominal 0.045" (1.14mm) thick reinforced TPO membrane strip with a nominal 0.035" (0.89mm) thick, fully cured synthetic rubber pressure sensitive adhesive laminated along one edge. The pressure sensitive adhesive is non-staining and will not affect the color of the membrane over time. The reinforced TPO membrane is 6" (150mm) wide while the adhesive strip is 3" (75mm) wide.

BASIC USES

TPO Pressure-Sensitive RUSS may be used with TPO and White-on-Black EPDM membrane and should only be installed on horizontal surfaces using an appropriate Mule-Hide fastener below the roof membrane to provide additional securement at angle changes. RUSS is secured with Mule-Hide EHD (#15) or HDP (#14) Fasteners and Mule-Hide 2.4” Seam Plates.

TYPICAL PHYSICAL PROPERTIES

Typical Properties and Characteristics*	
Base	Membrane-TPO (Polyester Reinforced) Adhesive-Synthetic Rubber
Thickness	Membrane 0.045" (1.14mm) Adhesive 0.035" (0.89mm)
Size	6" x 100' (150mm x 30.5m)
Packaging	200 lf/ctn (60m) - 2 rolls
Weight/Carton	40 lbs. (18.1 kg)
Shelf Life	1 year

*Typical properties and characteristics are based on samples tested and are not guaranteed for all samples of this product. This data and information is intended as a guide and does not reflect the specification range for any particular property of this product.

BENEFITS

- Eliminates need for separate wall flashing
- Eliminates penetrations thru the sheet at the base of projections or vertical walls
- Eliminates difficult task of heat welded next to a vertical surface

INSTALLATION INSTRUCTIONS

1. Unroll and position TPO 6-Inch Pressure Sensitive RUSS horizontally at the base of a parapet wall or curb. Locate the tab with fastener markings toward the wall and the pre-applied tape toward the field of the roof facing upwards.
2. Position 2.4” Seam Plates 1/8” to 3/4” (3 to 19mm) from the angle change and 12” (300mm) on center maximum and secure with HDP #14) or EHD #15) Fasteners. Do not fasten plates over top of the release liner as this will cause the liner to tear when removed. Mule-Hide recommends that the RUSS be fastened on the horizontal. In a case where fasteners must be located on the vertical surface, care must be taken to crease the RUSS and the membrane tightly into the angle change to maximize contact between the tape and membrane. Membrane must be adhered to the full width of the tape. Placing the plates tight into the angle change will help hold the RUSS in the proper position.

MULE-HIDE TPO PRESURE-SENSITIVE RUSS™ (6")

INSTALLATION INSTRUCTIONS (Continued)

3. Remove any dirt or dust resulting from plate installation. Any residual dust/dirt will be detrimental to the bond strength of the tape adhesive.
4. Position deck membrane and thoroughly clean the underside of the deck membrane using Weathered Membrane Cleaner if necessary. (The entire surface of the membrane where the tape is to contact must be clean. The TPO 6-Inch Pressure Sensitive RUSS adhesive will not adhere to dusted/dirty surfaces)
5. Apply Tape Primer to the underside of the deck membrane in the area that will come in contact with the 3" wide tape. Refer to Mule-Hide Product Data Sheet for application instructions.
6. Remove the release liner from the adhesive tape on the TPO 6-Inch Pressure Sensitive RUSS pulling it parallel to the roof deck.
7. Roll the deck membrane onto the exposed adhesive tape and apply hand pressure to the splice area.
8. Pull the membrane back to expose the unadhered portion of the TPO 6-Inch Pressure Sensitive RUSS. Apply TPO Bonding Adhesive or Sure-Weld Low VOC Bonding Adhesive to the underside of the deck membrane, exposed TPO 6-Inch Pressure Sensitive RUSS and parapet wall.
9. Once the adhesive has dried, roll membrane to the angle change and crease. (Take extra care when creasing TPO membrane into the angle change to achieve desirable appearance). Roll the membrane up the wall and broom for 100% adhesion.
10. Roll the entire 6" (150mm) width of the TPO 6-Inch PS RUSS splice area with a 2" (50mm) wide roller using positive pressure.
11. To achieve proper adhesion of the TPO 6-Inch PS RUSS when job site temperatures fall below 40ºF (5ºC), heat the cleaned, primed area with a hot air gun as the membrane is applied and pressed into place.

PRECAUTIONS

1. Mule-Hide recommends that the TPO 6" Pressure Sensitive RUSS be installed and fastened into only horizontal surfaces. See "Installation" section for cautions when fastening this product vertically.
2. Mule-Hide EHD (#15) or HDP (#14) fasteners and Mule-Hide 2.4" Seam Plates must be used when installing the TPO Pressure Sensitive RUSS.
3. Review the applicable Material Safety Data Sheet for complete safety information prior to use.
4. Due to solvent flash-off, condensation may form on freshly applied Tape Primer when the ambient temperature is near the dew point. If condensation develops, the application of primer and installation of TPO Pressure Sensitive RUSS must be discontinued as proper adhesion will not be achieved. Allow the primer surface to dry and apply a thin freshener coat of Tape Primer to the previously coated surface when conditions allow.
5. KEEP OUT OF REACH OF CHILDREN

STORAGE & HANDLING

1. TPO Pressure-Sensitive RUSS must be stored in a **dry** area.
2. Job site or warehouse storage temperatures in excess of 90°F (32°C) may affect product shelf life.
3. Prolonged job site or warehouse exposure to temperatures below 40°F (4°C) will cause tape adhesive to lose tack and in extreme cases not bond to the membrane. If this situation is encountered, remove TPO Pressure-Sensitive RUSS to a warm area and allow it to return to a minimum of 60°F (15°C).

PROTECTION & SAFETY

Mule-Hide maintains Material Safety Data Sheets on all of its products. Material Safety Data Sheets contain health and safety information for your development of appropriate product handling procedures to protect your employees and customers. Mule-Hide's Material Safety Data Sheets should be read and understood by all of your supervisory personnel and employees before using Mule-Hide products in your facilities.

MULE-HIDE TPO PRESURE-SENSITIVE RUSS™ (6")

ADDITIONAL INFORMATION

The information given on this PDS is subject to change without notice. Always check the Mule-Hide website at www.mulehide.com for the latest information, changes and updates or contact Mule-Hide Products Company at 800-786-1492.

DISCLAIMER

The statements provided concerning the material shown are intended as a guide for material usage and are believed to be true and accurate at the time of printing. No statement made by anyone may supersede this information, except when done in writing by Mule-Hide Products Co., Inc. Since the manner of use is beyond our control, Mule-Hide does not authorize anyone to make any warranty of merchantability or fitness for any particular purpose or any other warranty, guarantee or representation, expressed or implied, concerning this material. This product may be eligible for a Mule-Hide warranty, please check the Mule-Hide website at www.mulehide.com or contact Mule-Hide directly at 800-786-1492 for details. Buyer and user accept the product under these conditions and assume the risk of any failure, any injury person or property (including that of the user), loss or liability resulting from the handling, storage or use of the product whether or not it is handled, stored or used in accordance with the directions or specifications. Mule-Hide must be notified in writing of any claims and be given the opportunity to inspect the alleged failure before repairs are made.

Mule-Hide Products Co., Inc.
1195 Prince Hall Dr.
Beloit, WI 53511

PRODUCT DATA SHEET
PDS 09-4410
Revision Date: FEB-2014

MULE-HIDE TPO PRESURE-SENSITIVE RUSS (10")

PRODUCT DESCRIPTION

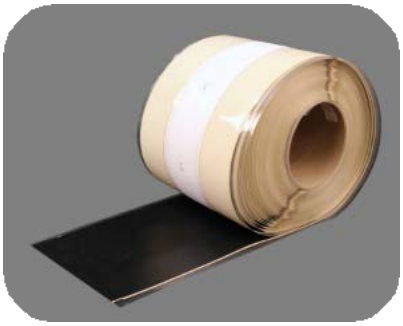

The 10" wide TPO Pressure-Sensitive RUSS consists of a strip of nominal 0.045" (1.14mm) thick reinforced TPO membrane and a strip of nominal 0.035" (0.89mm) thick, fully cured synthetic rubber pressure sensitive tape laminated along each edge. The pressure sensitive adhesive is non-staining and will not affect the color of the membrane over time. The reinforced TPO membrane is 10" (250 mm) wide while each adhesive strip is 3" (75mm) wide.

BASIC USES

The 10" wide TPO Pressure-Sensitive RUSS is used in place of narrow width sheets to secure membrane in the perimeter area of the roof. The use of this product allows field membrane to be utilized over the entire roof area. The use of this product is ideal when multiple perimeter sheets or non-standard perimeter spacings are required.

TYPICAL PHYSICAL PROPERTIES

Typical Properties and Characteristics*	
Base	Membrane-TPO (Polyester Reinforced) Adhesive-Synthetic Rubber
Thickness	Membrane 0.045" (1.14mm) Adhesive 0.035" (0.89mm)
Size	10" x 100' (250mm x 30m)
Packaging	100 lf/ctn (30m) - 1 rolls
Weight/Carton	32 lbs. (14.5 kg)
Shelf Life	1 year

*Typical properties and characteristics are based on samples tested and are not guaranteed for all samples of this product. This data and information is intended as a guide and does not reflect the specification range for any particular property of this product.

BENEFITS

- Eliminates need for narrow width perimeter sheets
- Simplifies perimeter securement
- Ideal for membrane securement on a metal retrofit system

INSTALLATION INSTRUCTIONS

1. Unroll and position the TPO 10” Pressure Sensitive RUSS over the insulation substrate where membrane securement is desired. Locate the RUSS with the fastener markings and tape facing upwards.
2. Position Mule-Hide 2.4” Seam Plates 12” (300mm) on center maximum and secure with an appropriate fastener. Do not fasten plates over top of the release liner as this will cause the liner to tear when removed.
3. Remove any dirt or dust resulting from plate installation. Any residual dust/dirt will be detrimental to the bond strength of the tape adhesive.

MULE-HIDE TPO PRESURE-SENSITIVE RUSS (10")

INSTALLATION INSTRUCTIONS (Continued)

4. Position deck membrane and thoroughly clean the tape contact area using Weathered Membrane Cleaner if necessary. (The entire membrane surface where the tape is to contact must be clean. The adhesive on the TPO 10" Pressure Sensitive RUSS will not adhere to dusted/dirty surfaces).
5. Apply Tape Primer to the underside of the deck membrane in the area that will come in contact with the 3" wide tape. Refer to Tape Primer Product Data Sheet for installation information.
6. Remove the release liner from the tape on the TPO 10" Pressure Sensitive RUSS pulling it parallel to the roof deck.
7. Once the TPO Primer has dried to the touch, roll the deck membrane onto the exposed tape and apply hand pressure to the splice area.
8. Roll the entire 10" (250mm) width of the TPO Pressure Sensitive RUSS splice area with a 2" (50mm) wide roller using positive pressure.
9. To achieve proper adhesion of the TPO Pressure Sensitive RUSS when job site temperatures fall below 40ºF (5ºC), heat the cleaned/primed area of the membrane with a hot air gun as it is applied and pressed into the tape.

PRECAUTIONS

1. Mule-Hide recommends that the TPO 6" Pressure Sensitive RUSS be installed and fastened into only horizontal surfaces. See "Installation" section for cautions when fastening this product vertically.
2. Mule-Hide EHD (#15) or HDP (#14) fasteners and Mule-Hide 2.4" Seam Plates must be used when installing the TPO Pressure Sensitive RUSS.
3. Review the applicable Material Safety Data Sheet for complete safety information prior to use.
4. Due to solvent flash-off, condensation may form on freshly applied Tape Primer when the ambient temperature is near the dew point. If condensation develops, the application of primer and installation of TPO Pressure Sensitive RUSS must be discontinued as proper adhesion will not be achieved. Allow the primer surface to dry and apply a thin freshener coat of Tape Primer to the previously coated surface when conditions allow.
5. KEEP OUT OF REACH OF CHILDREN

STORAGE & HANDLING

1. TPO Pressure-Sensitive RUSS must be stored in a **dry** area.
2. Job site or warehouse storage temperatures in excess of 90°F (32°C) may affect product shelf life.
3. Prolonged job site or warehouse exposure to temperatures below 40°F (4°C) will cause tape adhesive to lose tack and in extreme cases not bond to the membrane. If this situation is encountered, remove TPO Pressure-Sensitive RUSS to a warm area and allow it to return to a minimum of 60°F (15°C).

PROTECTION & SAFETY

Mule-Hide maintains Material Safety Data Sheets on all of its products. Material Safety Data Sheets contain health and safety information for your development of appropriate product handling procedures to protect your employees and customers. Mule-Hide's Material Safety Data Sheets should be read and understood by all of your supervisory personnel and employees before using Mule-Hide products in your facilities.

ADDITIONAL INFORMATION

The information given on this PDS is subject to change without notice. Always check the Mule-Hide website at www.mulehide.com for the latest information, changes and updates or contact Mule-Hide Products Company at 800-786-1492.

MULE-HIDE TPO PRESURE-SENSITIVE RUSS (10")

DISCLAIMER

The statements provided concerning the material shown are intended as a guide for material usage and are believed to be true and accurate at the time of printing. No statement made by anyone may supersede this information, except when done in writing by Mule-Hide Products Co., Inc. Since the manner of use is beyond our control, Mule-Hide does not authorize anyone to make any warranty of merchantability or fitness for any particular purpose or any other warranty, guarantee or representation, expressed or implied, concerning this material. This product may be eligible for a Mule-Hide warranty, please check the Mule-Hide website at www.mulehide.com or contact Mule-Hide directly at 800-786-1492 for details. Buyer and user accept the product under these conditions and assume the risk of any failure, any injury person or property (including that of the user), loss or liability resulting from the handling, storage or use of the product whether or not it is handled, stored or used in accordance with the directions or specifications. Mule-Hide must be notified in writing of any claims and be given the opportunity to inspect the alleged failure before repairs are made.

Mule-Hide Products Co., Inc.
1195 Prince Hall Dr.
Beloit, WI 53511

PRODUCT DATA SHEET
PDS 09-4505
Revision Date: FEB-2014

MULE-HIDE TPO T-JOINT COVER

PRODUCT DESCRIPTION

TPO T-Joint Covers are made from 60-mil non-reinforced flashing cut into a 4.5" diameter circle.

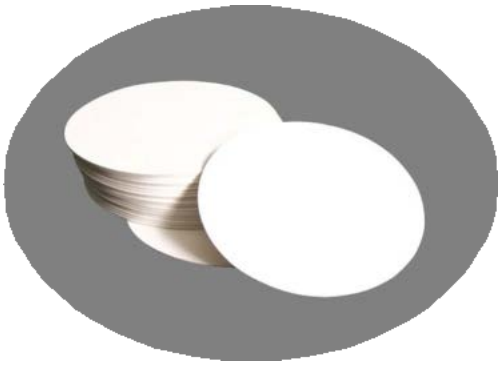

BASIC USES

TPO T-Joint Covers are used to seal step-offs at splice intersections. Installation is mandatory on all 60-mil and 80-mil TPO systems and on 45-mil systems where step-offs have not been properly sealed.

TYPICAL PHYSICAL PROPERTIES

Typical Properties and Characteristics*	
Material	Non-reinforced TPO
Size	4.5" (114 mm) diameter
Thickness	60-mil (1.5 mm)
Packaging	100 per box
Weight	3.5 lbs (1.6 kg) per box
Color	White, Gray and Tan

*Typical properties and characteristics are based on samples tested and are not guaranteed for all samples of this product. This data and information is intended as a guide and does not reflect the specification range for any particular property of this product.

BENEFITS

- More consistent performance compared to hand cutting
- Every T-Joint Patch is a perfect 4.5" diameter circle
- Offers labor savings compared to hand cut flashings
- Seals channels at splice intersections created by seam step-offs

INSTALLATION INSTRUCTIONS

1. If membrane has been exposed to the weather, clean splice intersection area with Weathered Membrane Cleaner.
2. Use a lower temperature setting on the hand heat welder than that used for welding reinforced TPO membrane. (Typically a setting of "6" on a scale of "10" is appropriate for welding TPO T-Joint Covers.)
3. Center the T-Joint Cover over the splice intersection, begin welding at the center point and work towards the outside. Use the edge of the roller to crease the T-Joint cover into membrane step-offs to achieve a proper seal.
4. Using a probe, check all splices for voids and cold welds only once the T-Joint Cover has completely cooled. Make any needed repairs.
   Review Mule-Hide specifications and details for complete installation information.

PRECAUTIONS

1. Do not use TPO T-Joint Cover to overlay fasteners and plates.
2. Reinforced membrane is required to overlay fasteners and plates...

MULE-HIDE TPO T-JOINT COVER

STORAGE & HANDLING

1. Store T-Joint Covers in a cool, shaded area and cover with light-colored, breathable, waterproof tarpaulins.
2. T-Joint Covers that have been exposed to the weather must be prepared with Weathered Membrane Cleaner before hot-air welding.

PROTECTION & SAFETY

Mule-Hide maintains Material Safety Data Sheets on all of its products. Material Safety Data Sheets contain health and safety information for your development of appropriate product handling procedures to protect your employees and customers. Mule-Hide's Material Safety Data Sheets should be read and understood by all of your supervisory personnel and employees before using Mule-Hide products in your facilities.

ADDITIONAL INFORMATION

The information given on this PDS is subject to change without notice. Always check the Mule-Hide website at www.mulehide.com for the latest information, changes and updates or contact Mule-Hide Products Company at 800-786-1492.

DISCLAIMER

Mule-Hide Products Co., Inc.
1195 Prince Hall Dr.
Beloit, WI 53511

PRODUCT DATA SHEET
PDS 09-4540
Revision Date: FEB-2014

MULE-HIDE TPO UNIVERSAL CORNERS

PRODUCT DESCRIPTION

Mule-Hide TPO Universal Corners are pre-molded from non-reinforced TPO (polyolefin) membrane.

BASIC USES

Mule-Hide TPO Universal Corners are uniform in shape and size and provide water tightness at corners formed by TPO coated metal and/or TPO flashing membrane. They provide a neat, finished look to building corners, curbs and parapet flashings with no cutting or stretching required.

TYPICAL PHYSICAL PROPERTIES

Color:	White
Thickness:	.060" (1.52mm) thick molded material
Packaging:	20 pieces per carton

*Typical properties and characteristics are based on samples tested and are not guaranteed for all samples of this product. This data and information is intended as a guide and does not reflect the specification range for any particular property of this product.

BENEFITS

- More consistent performance compared to hand cutting
- Every Universal Corner is consistent in size
- Offers labor savings compared to hand cut flashings

INSTALLATION INSTRUCTIONS

1. If membrane has been exposed to the weather, clean splice intersection area with Weathered Membrane Cleaner.
2. Use a lower temperature setting on the hand heat welder than that used for welding reinforced TPO membrane. (Typically a setting of “6” on a scale of “10” is appropriate for welding TPO Universal Corners.)
3. Mule-Hide TPO Universal Corners must be installed by heat welding. Refer to Mule-Hide Details published in the Mule-Hide TPO Specification Manual. Do not use adhesive to install.
4. Using a probe, check all splices for voids and cold welds only once the TPO Universal corner has completely cooled. Make any needed repairs.
   Review Mule-Hide specifications and details for complete installation information.

STORAGE

Corners should be stored in a clean, dry area and protected from extreme temperatures.

PROTECTION & SAFETY

Mule-Hide maintains Material Safety Data Sheets on all of its products. Material Safety Data Sheets contain health and safety information for your development of appropriate product handling procedures to protect your employees and customers. Mule-Hide's Material Safety Data Sheets should be read and understood by all of your supervisory personnel and employees before using Mule-Hide products in your facilities.

MULE-HIDE TPO UNIVERSAL CORNERS

ADDITIONAL INFORMATION

The information given on this PDS is subject to change without notice. Always check the Mule-Hide website at www.mulehide.com for the latest information, changes and updates or contact Mule-Hide Products Company at 800-786-1492.

DISCLAIMER

The statements provided concerning the material shown are intended as a guide for material usage and are believed to be true and accurate at the time of printing. No statement made by anyone may supersede this information, except when done in writing by Mule-Hide Products Co., Inc. Since the manner of use is beyond our control, Mule-Hide does not authorize anyone to make any warranty of merchantability or fitness for any particular purpose or any other warranty, guarantee or representation, expressed or implied, concerning this material. This product may be eligible for a Mule-Hide warranty, please check the Mule-Hide website at www.mulehide.com or contact Mule-Hide directly at 800-786-1492 for details. Buyer and user accept the product under these conditions and assume the risk of any failure, any injury person or property (including that of the user), loss or liability resulting from the handling, storage or use of the product whether or not it is handled, stored or used in accordance with the directions or specifications. Mule-Hide must be notified in writing of any claims and be given the opportunity to inspect the alleged failure before repairs are made.

Mule-Hide Products Co., Inc.
1195 Prince Hall Dr.
Beloit, WI 53511

PRODUCT DATA SHEET
PDS 09-4545
Revision Date: FEB-2014

MULE-HIDE TPO INSIDE CORNERS

PRODUCT DESCRIPTION

Mule-Hide TPO Inside Corners are pre-molded from non-reinforced TPO (polyolefin) membrane.

BASIC USES

Mule-Hide TPO Inside Corners are uniform in shape and size and provide water tightness at inside corners formed by TPO coated metal and/or TPO flashing membrane. They provide a neat, finished look to building corners, curbs and parapet flashings with no cutting required.

TYPICAL PHYSICAL PROPERTIES

Color:	White, Gray & Tan
Material:	Non-reinforced TPO
Thickness:	.060" (1.52mm) thick molded material
Packaging:	12 pieces per carton

*Typical properties and characteristics are based on samples tested and are not guaranteed for all samples of this product. This data and information is intended as a guide and does not reflect the specification range for any particular property of this product.

BENEFITS

- More consistent performance compared to hand cutting
- Forms easily to flash “out of square” corners that are not exactly 90 degrees
- Offers labor savings compared to hand cut flashings

INSTALLATION INSTRUCTIONS

1. If membrane has been exposed to the weather, clean splice intersection area with Weathered Membrane Cleaner.
2. Use a lower temperature setting on the hand heat welder than that used for welding reinforced TPO membrane. (Typically a setting of “6” on a scale of “10” is appropriate for welding TPO Inside Corners.)
3. Position TPO Inside Corner into the building corner and begin welding at the innermost corner point and work away from the corner.
4. Use the roller edge to crease the corner flashing into any membrane step-off to create a proper seal.
5. Using a probe, check all splices for voids and cold welds only once the TPO Inside corner has completely cooled. Make any needed repairs.
   Review Mule-Hide specifications and details for complete installation information.

STORAGE

Corners should be stored in a clean, dry area and protected from extreme temperatures.

PROTECTION & SAFETY

Mule-Hide maintains Material Safety Data Sheets on all of its products. Material Safety Data Sheets contain health and safety information for your development of appropriate product handling procedures to protect your employees and customers. Mule-Hide's Material Safety Data Sheets should be read and understood by all of your supervisory personnel and employees before using Mule-Hide products in your facilities.

MULE-HIDE TPO INSIDE CORNERS

ADDITIONAL INFORMATION

The information given on this PDS is subject to change without notice. Always check the Mule-Hide website at www.mulehide.com for the latest information, changes and updates or contact Mule-Hide Products Company at 800-786-1492.

DISCLAIMER

The statements provided concerning the material shown are intended as a guide for material usage and are believed to be true and accurate at the time of printing. No statement made by anyone may supersede this information, except when done in writing by Mule-Hide Products Co., Inc. Since the manner of use is beyond our control, Mule-Hide does not authorize anyone to make any warranty of merchantability or fitness for any particular purpose or any other warranty, guarantee or representation, expressed or implied, concerning this material. This product may be eligible for a Mule-Hide warranty, please check the Mule-Hide website at www.mulehide.com or contact Mule-Hide directly at 800-786-1492 for details. Buyer and user accept the product under these conditions and assume the risk of any failure, any injury person or property (including that of the user), loss or liability resulting from the handling, storage or use of the product whether or not it is handled, stored or used in accordance with the directions or specifications. Mule-Hide must be notified in writing of any claims and be given the opportunity to inspect the alleged failure before repairs are made.

Mule-Hide Products Co., Inc.
1195 Prince Hall Dr.
Beloit, WI 53511

PRODUCT DATA SHEET
PDS 09-4547
Revision Date: FEB-2014

MULE-HIDE TPO OUTSIDE CORNERS

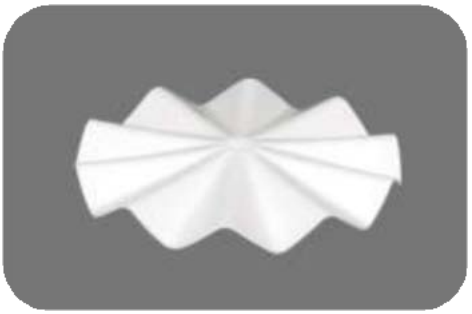

PRODUCT DESCRIPTION

Mule-Hide TPO Outside Corners are pre-molded from non-reinforced TPO (polyolefin) membrane.

BASIC USES

Mule-Hide TPO Outside Corners are uniform in shape and size and provide water tightness at Outside corners formed by TPO coated metal and/or TPO flashing membrane. They provide a neat, finished look to building corners, curbs and parapet flashings with no cutting required.

TYPICAL PHYSICAL PROPERTIES

Color:	White, Gray & Tan
Material:	Non-reinforced TPO
Thickness:	.060" (1.52mm) thick molded material
Packaging:	12 pieces per bag

*Typical properties and characteristics are based on samples tested and are not guaranteed for all samples of this product. This data and information is intended as a guide and does not reflect the specification range for any particular property of this product.

BENEFITS

- More consistent performance compared to hand cutting
- Forms easily to flash “out of square” outside corners that are not exactly 90 degrees
- Offers labor savings compared to hand cut flashings

INSTALLATION INSTRUCTIONS

1. If membrane has been exposed to the weather, clean splice intersection area with Weathered Membrane Cleaner.
2. Use a lower temperature setting on the hand heat welder than that used for welding reinforced TPO membrane. (Typically a setting of “6” on a scale of “10” is appropriate for welding TPO Outside Corners.)
3. Position TPO Outside Corner into the building corner and begin welding at the innermost corner point and work away from the corner.
4. Use the roller edge to crease the corner flashing into any membrane step-off to create a proper seal.
5. Using a probe, check all splices for voids and cold welds only once the TPO Outside corner has completely cooled. Make any needed repairs.
   Review Mule-Hide specifications and details for complete installation information.

STORAGE

Corners should be stored in a clean, dry area and protected from extreme temperatures.

PROTECTION & SAFETY

Mule-Hide maintains Material Safety Data Sheets on all of its products. Material Safety Data Sheets contain health and safety information for your development of appropriate product handling procedures to protect your employees and customers. Mule-Hide's Material Safety Data Sheets should be read and understood by all of your supervisory personnel and employees before using Mule-Hide products in your facilities.

MULE-HIDE TPO OUTSIDE CORNERS

ADDITIONAL INFORMATION

The information given on this PDS is subject to change without notice. Always check the Mule-Hide website at www.mulehide.com for the latest information, changes and updates or contact Mule-Hide Products Company at 800-786-1492.

DISCLAIMER

The statements provided concerning the material shown are intended as a guide for material usage and are believed to be true and accurate at the time of printing. No statement made by anyone may supersede this information, except when done in writing by Mule-Hide Products Co., Inc. Since the manner of use is beyond our control, Mule-Hide does not authorize anyone to make any warranty of merchantability or fitness for any particular purpose or any other warranty, guarantee or representation, expressed or implied, concerning this material. This product may be eligible for a Mule-Hide warranty, please check the Mule-Hide website at www.mulehide.com or contact Mule-Hide directly at 800-786-1492 for details. Buyer and user accept the product under these conditions and assume the risk of any failure, any injury person or property (including that of the user), loss or liability resulting from the handling, storage or use of the product whether or not it is handled, stored or used in accordance with the directions or specifications. Mule-Hide must be notified in writing of any claims and be given the opportunity to inspect the alleged failure before repairs are made.

Mule-Hide Products Co., Inc.
1195 Prince Hall Dr.
Beloit, WI 53511

PRODUCT DATA SHEET
PDS 09-5110
Revision Date: Oct-2013

MULE-HIDE 2.4" SEAM PLATES

PRODUCT DESCRIPTION

Mule-Hide's 2.4" Seam Plates are round Galvalume coated metal plates with (14) barbed anchors and reinforcing ribs for superior wind uplift resistance

BASIC USES

Mule-Hide's 2.4" Seam Plates are designed for the mechanical attachment of the Mule-Hide Reinforced EPDM, PVC and TPO membranes. The 2.4" Seam Plates are attached with Mule-Hide HDP Fasteners or EHD Fasteners. In addition to securing mechanically attached reinforced membranes, our 2.4" Seam Plates can be used with our reinforced 6" wide RMS, or our 6" wide and 10" wide RUSS™ Strips.

SPECIFICATIONS

Material: 20 ga. Galvalume coated metal
Coating: Galvalume AZ 55 meeting ASTM A 792 Grade 50A
Corrosion: Meets FM corrosion standard 4470
Pull Thru: Flat truss head pulled through the center hole of the plate, minimum pull thru: 800 lbs.

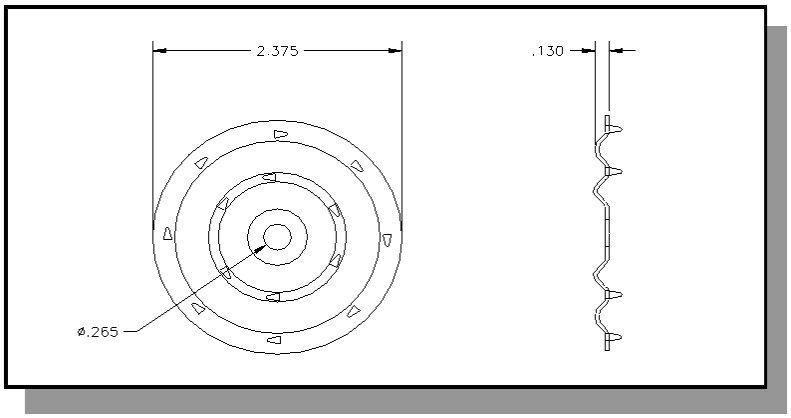

CODE APPROVALS/COMPLIANCE

Mule-Hide HDP Fasteners comply with the requirements of the following specifications, test and code requirements when properly installed.

* FM Standard 4450/4470 Approval * Metro-Dade Approved *Florida Product Approval

PACKAGING

Packaged in cartons of 1,000, approximate weight is 40# per box.

INSTALLATION INSTRUCTIONS

Install Mule-Hide 2.4" Seam Plates with barbs facing toward membrane (see appropriate detail drawing).
Secure 2.4" Seam Plate with Mule-Hide HDP or EHD fasteners in to substrate.
Use eye protection when installing fasteners.

MULE-HIDE 2.4" SEAM PLATES

PROTECTION & SAFETY

Mule-Hide maintains Material Safety Data Sheets on all of its products. Material Safety Data Sheets contain health and safety information for your development of appropriate product handling procedures to protect your employees and customers. Mule-Hide's Material Safety Data Sheets should be read and understood by all of your supervisory personnel and employees before using Mule-Hide products in your facilities.

LEED INFORMATION

Recycled Content

Postconsumer (1)	40%
Preconsumer (2)	18%
Total Recycled Content (3)	58%
LEED – Eligible Recycled Content (4)	49%

(1) Postconsumer material is defined as waste material generated by households or commercial, industrial and institutional facilities in their role as end-users of the product, which can no longer be used for its intended purposes.
(2) Preconsumer material is defined as material diverted from the waste stream during the manufacturing process. Reutilization of materials (i.e. rework, regrind or scrap generated in a process and capable of being reclaimed within the same process that generated it) is excluded.
(3) Total Recycled Content = Postconsumer Content + Preconsumer Content.
(4) LEED-Eligible Recycled Content = Postconsumer + ½ Preconsumer Content (per LEED Standard). Recycled content value is determined by weight.

ADDITIONAL INFORMATION

The information given on this PDS is subject to change without notice. Always check the Mule-Hide website at www.mulehide.com for the latest information, changes and updates or contact Mule-Hide Products Company at 800-786-1492.

DISCLAIMER

The statements provided concerning the material shown are intended as a guide for material usage and are believed to be true and accurate at the time of printing. No statement made by anyone may supersede this information, except when done in writing by Mule-Hide Products Co., Inc. Since the manner of use is beyond our control, Mule-Hide does not authorize anyone to make any warranty of merchantability or fitness for any particular purpose or any other warranty, guarantee or representation, expressed or implied, concerning this material. This product may be eligible for a Mule-Hide warranty, please check the Mule-Hide website at www.mulehide.com or contact Mule-Hide directly at 800-786-1492 for details. Buyer and user accept the product under these conditions and assume the risk of any failure, any injury person or property (including that of the user), loss or liability resulting from the handling, storage or use of the product whether or not it is handled, stored or used in accordance with the directions or specifications. Mule-Hide must be notified in writing of any claims and be given the opportunity to inspect the alleged failure before repairs are made.

Mule-Hide Products Co., Inc.
1195 Prince Hall Dr.
Beloit, WI 53511

PRODUCT DATA SHEET
PDS 09-5115
Revision Date: OCT-2013

MULE-HIDE 3” INSULATION PLATES

PRODUCT DESCRIPTION

Mule-Hide ‘s 3” Insulation Plates are round Galvalume coated metal plates with reinforcing ribs for superior wind uplift resistance

BASIC USES

Mule-Hide's 3” Insulation Plates are designed specifically for the mechanical attachment of Mule-Hide’s Poly ISO 1 and Poly ISO 2 insulation and other FM Approved insulation / cover boards.

SPECIFICATIONS

Material: 26 ga. Galvalume coated metal
Coating: Galvalume AZ 50 meeting ASTM A 792 Grade 50A
Corrosion: Meets FM corrosion standard 4470

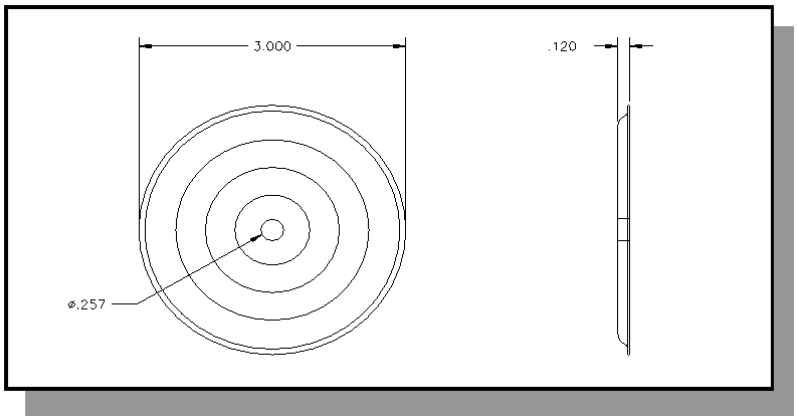

CODE APPROVALS/COMPLIANCE

Mule-Hide HDP Fasteners comply with the requirements of the following specifications, test and code requirements when properly installed.

* FM Standard 4450/4470 Approval * Metro-Dade Approved *Florida Product Approval

PACKAGING

Packaged in cartons of 1,000, approximate weight is 40# per box.

INSTALLATION INSTRUCTIONS

Install Mule-Hide 3” Insulation Plates with head indentation facing upward.
Secure 2.4” Seam Plate with Mule-Hide HDP or EHD fasteners in to substrate.
Use eye protection when installing fasteners.

MULE-HIDE 3" INSULATION PLATES

PROTECTION & SAFETY

Mule-Hide maintains Material Safety Data Sheets on all of its products. Material Safety Data Sheets contain health and safety information for your development of appropriate product handling procedures to protect your employees and customers. Mule-Hide's Material Safety Data Sheets should be read and understood by all of your supervisory personnel and employees before using Mule-Hide products in your facilities.

LEED INFORMATION

Recycled Content

Postconsumer (1)	40%
Preconsumer (2)	18%
Total Recycled Content (3)	58%
LEED – Eligible Recycled Content (4)	49%

(1) Postconsumer material is defined as waste material generated by households or commercial, industrial and institutional facilities in their role as end-users of the product, which can no longer be used for its intended purposes.
(2) Preconsumer material is defined as material diverted from the waste stream during the manufacturing process. Reutilization of materials (i.e. rework, regrind or scrap generated in a process and capable of being reclaimed within the same process that generated it) is excluded.
(3) Total Recycled Content = Postconsumer Content + Preconsumer Content.
(4) LEED-Eligible Recycled Content = Postconsumer + ½ Preconsumer Content (per LEED Standard). Recycled content value is determined by weight.

ADDITIONAL INFORMATION

The information given on this PDS is subject to change without notice. Always check the Mule-Hide website at www.mulehide.com for the latest information, changes and updates or contact Mule-Hide Products Company at 800-786-1492.

DISCLAIMER

The statements provided concerning the material shown are intended as a guide for material usage and are believed to be true and accurate at the time of printing. No statement made by anyone may supersede this information, except when done in writing by Mule-Hide Products Co., Inc. Since the manner of use is beyond our control, Mule-Hide does not authorize anyone to make any warranty of merchantability or fitness for any particular purpose or any other warranty, guarantee or representation, expressed or implied, concerning this material. This product may be eligible for a Mule-Hide warranty, please check the Mule-Hide website at www.mulehide.com or contact Mule-Hide directly at 800-786-1492 for details. Buyer and user accept the product under these conditions and assume the risk of any failure, any injury person or property (including that of the user), loss or liability resulting from the handling, storage or use of the product whether or not it is handled, stored or used in accordance with the directions or specifications. Mule-Hide must be notified in writing of any claims and be given the opportunity to inspect the alleged failure before repairs are made.

Mule-Hide Products Co., Inc.
1195 Prince Hall Dr.
Beloit, WI 53511

MULE-HIDE DRILL POINT FASTENERS

PRODUCT DESCRIPTION

Mule-Hide Drill Point Fasteners are # 12 fasteners manufactured from C-1022 heat treated wire. These fasteners incorporate a No. 3 Phillips recess, flat truss head with a #2 double flute self-drilling point. The drill point has an exclusive tapered entry thread design that allows for fastener penetration into steel roof decks and offers exceptional back-out resistance.

BASIC USES

Mule-Hide's Drill Point Fasteners are designed specifically for the mechanical attachment of Mule-Hide's Poly ISO 1 and Poly ISO 2 roof insulation boards and other FM approved insulation / cover boards into steel and wood decks. The Mule-Hide Drill Point Fasteners may be used in conjunction with the Mule-Hide 3" Insulation Plates. Refer to Mule-Hide's appropriate Single-Ply Manuals for installation instructions and uses.

SPECIFICATIONS

Wire:	---	SAE C-1022, heat treated wire
Coating:	---	TRU-Kote PC-3
Corrosion Resistance	FM 4470, DIN 50018	<15% Red Rust after 30 cycles
Tensile Strength	ASTM F606-10	2500 lb.
Shear Strength	NASM 1312-20	1900 lb. (thread zone)

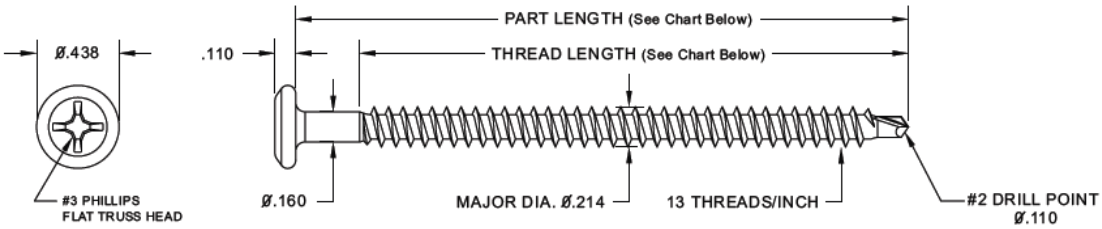

PACKAGING

Screw Length*	Thread Length*	Pieces/Box	Weight/Box
1-5/8"	1-5/8"	1000	11.8 lbs
2-1/4"	2-1/4"	1000	16.2 lbs
2-7/8'	2-7/8"	1000	19.7 lbs
3-1/4"	2-7/8"	1000	21.5 lbs
3-3/4"	2-7/8"	1000	24.6 lbs
4-1/2"	3-7/8"	1000	28.8 lbs
5"	3-7/8"	1000	31.5lbs
6"	3-7/8"	1000	37.1 lbs
7"	3-7/8"	500	20.9 lbs
8"	3-7/8"	500	23.9 lbs
Screw Length and Thread Length are ± 1/16"			

PERFORMANCE INFORMTION

Average Ultimate Pullout Values in Corrugated Steel Deck Substrates													
Thickness	24 ga.	22 ga.			20 ga.			18 ga.			16 ga.		
Strength, ksi	36.5	33.0	80.0	102.0	33.0	80.0	102.0	33.0	80.0	102.0	33.0	80.0	102.0
Pullout (lbs)	230	285	410	465	355	505	580	540	715	800	710	1000	1142

PERFORMANCE INFORMATION (continued)

MULE-HIDE DRILL POINT FASTENERS

Average Ultimate Pullout Values in Wood Substrates								
Type	APA Rated OSB				APA Rated Plywood			
Thickness	7/16”	15/32”	19/32”	23/32”	15/32”	19/32”	23/32”	SPF #2
Pullout (lbs)	265	300	325	440	365	475	720	700*

*lbf./in. of thread penetration including tip.

Pull out values are offered only as a guide and are not guaranteed in any way.
Designated holding powers are dependent upon quality of substrate and accuracy of installation.
Mule-Hide recommends that fastener pull out testing be performed to verify fastener performance.

CODE APPROVALS/COMPLIANCE

Mule-Hide Drill Point Fasteners comply with the requirements of the following specifications, test and code requirements when properly installed.

* FM Standard 4450/4470 Approval * Metro-Dade Approved *Florida Product Approval

INSTALLATION INSTRUCTIONS

Steel and Wood Decks
Install fasteners with #3 Phillips drive bit provided in box and a variable speed screw gun. Fastener must penetrate the deck a minimum of ¾” as measured from the underside of the roof deck to the fastener tip. Ensure that fastener is installed perpendicular to surface of roof deck. Care should be taken to not overdrive the fastener causing damage to roof insulation, fastener or roof deck.

Use eye protection when installing fasteners.

PROTECTION & SAFETY

Mule-Hide maintains Material Safety Data Sheets on all of its products. Material Safety Data Sheets contain health and safety information for your development of appropriate product handling procedures to protect your employees and customers. Mule-Hide's Material Safety Data Sheets should be read and understood by all of your supervisory personnel and employees before using Mule-Hide products in your facilities.

LEED INFORMATION

Recycled Content

Postconsumer (1)	15%
Preconsumer (2)	10%
Total Recycled Content (3)	25%
LEED – Eligible Recycled Content (4)	20%

(1) Postconsumer material is defined as waste material generated by households or commercial, industrial and institutional facilities in their role as end-users of the product, which can no longer be used for its intended purposes.
(2) Preconsumer material is defined as material diverted from the waste stream during the manufacturing process. Reutilization of materials (i.e. rework, regrind or scrap generated in a process and capable of being reclaimed within the same process that generated it) is excluded.
(3) Total Recycled Content = Postconsumer Content + Preconsumer Content.
(4) LEED-Eligible Recycled Content = Postconsumer + ½ Preconsumer Content (per LEED Standard). Recycled content value is determined by weight.

MULE-HIDE DRILL POINT FASTENERS

ADDITIONAL INFORMATION

The information given on this PDS is subject to change without notice. Always check the Mule-Hide website at www.mulehide.com for the latest information, changes and updates or contact Mule-Hide Products Company at 800-786-1492.

DISCLAIMER

The statements provided concerning the material shown are intended as a guide for material usage and are believed to be true and accurate at the time of printing. No statement made by anyone may supersede this information, except when done in writing by Mule-Hide Products Co., Inc. Since the manner of use is beyond our control, Mule-Hide does not authorize anyone to make any warranty of merchantability or fitness for any particular purpose or any other warranty, guarantee or representation, expressed or implied, concerning this material. This product may be eligible for a Mule-Hide warranty, please check the Mule-Hide website at www.mulehide.com or contact Mule-Hide directly at 800-786-1492 for details. Buyer and user accept the product under these conditions and assume the risk of any failure, any injury person or property (including that of the user), loss or liability resulting from the handling, storage or use of the product whether or not it is handled, stored or used in accordance with the directions or specifications. Mule-Hide must be notified in writing of any claims and be given the opportunity to inspect the alleged failure before repairs are made.

Mule-Hide Products Co., Inc.
1195 Prince Hall Dr.
Beloit, WI 53511

MULE-HIDE HDP FASTENERS

PRODUCT DESCRIPTION

Mule-Hide HDP fasteners (Heavy Duty) are # 14 fasteners manufactured from C-1022 heat treated wire. These fasteners incorporate a No. 3 Phillips recess, flat truss head with a #2 double flute self-drilling point. The drill point has an exclusive tapered entry thread design that allows for fastener penetration into steel roof decks and offers exceptional back-out resistance.

BASIC USES

Mule-Hide's HDP Fasteners are designed specifically for the mechanical attachment of Mule-Hide's reinforced EPDM, TPO and PVC membranes and for the mechanical attachment of Poly ISO 1 and Poly ISO 2 roof insulation boards and other FM approved insulation / cover boards into steel, wood and concrete decks. The Mule-Hide HDP Fasteners may be used in conjunction with the Mule-Hide 2.4" Seam Plates, 3" Insulation Plates and All Purpose Bars. Refer to Mule-Hide's appropriate Single-Ply Manuals for installation instructions and uses.

SPECIFICATIONS

Wire:	---	SAE C-1022, heat treated wire
Coating:	---	TRU-Kote PC-3
Corrosion Resistance	FM 4470, DIN 50018	<15% Red Rust after 30 cycles
Tensile Strength	ASTM F606-10	3200 lb.
Shear Strength	NASM 1312-20	2200 lb. (thread zone)

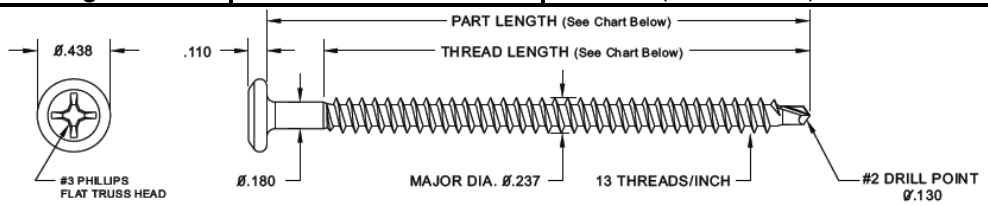

PACKAGING

Screw Length*	Thread Length*	Pieces/Box	Weight/Box
1-1/2"	1-1/2"	1000	12.9 lbs
2"	2"	1000	15.5 lbs
2-1/2"	2-1/2"	1000	19.4 lbs
3"	2-7/8"	1000	23.7 lbs
3-1/2"	2-7/8"	1000	26.4 lbs
4"	3-7/8"	1000	30.9 lbs
4-1/2"	3-7/8"	1000	33.6 lbs
5"	3-7/8"	1000	37.3 lbs
5-1/2"	3-7/8"	1000	40.8 lbs
6"	3-7/8"	1000	44.0 lbs
7"	3-7/8"	500	25.9 lbs
8"	3-7/8"	500	29.7 lbs
9"	3-7/8"	250	16.6 lbs
10"	3-7/8"	250	18.5 lbs
11"	3-7/8"	250	20.1 lbs
12"	3-7/8"	250	22.0 lbs

Notes: Screw Length is ± 1/16"
Thread Length is ± 1/16"

MULE-HIDE HDP FASTENERS

Performance Information

Average Ultimate Pullout Values in Corrugated Steel Deck Substrates													
Thickness	24 ga.	22 ga.			20 ga.			18 ga.			16 ga.		
Strength, ksi	36.5	33.0	80.0	102.0	33.0	80.0	102.0	33.0	80.0	102.0	33.0	80.0	102.0
Pullout (lbs)	255	315	480	560	420	615	710	675	885	985	850	1115	1240

Average Ultimate Pullout Values in Wood Substrates								
Type	APA Rated OSB				APA Rated Plywood			
Thickness	7/16”	15/32”	19/32”	23/32”	15/32”	19/32”	23/32”	SPF #2
Pullout (lbs)	270	290	310	410	360	410	730	795*

*lbf./in. of thread penetration including tip.

Average Ultimate Pullout Values in 3000 psi Concrete	
Pullout (lbf.)	450*

*lbf/in. of thread penetration, including tip.

Pull out values are offered only as a guide and are not guaranteed in any way.
Designated holding powers are dependent upon quality of substrate and accuracy of installation.
Mule-Hide recommends that fastener pull out testing be performed to verify fastener performance.

CODE APPROVALS/COMPLIANCE

Mule-Hide HDP Fasteners comply with the requirements of the following specifications, test and code requirements when properly installed.

* FM Standard 4450/4470 Approval * Metro-Dade Approved *Florida Product Approval

INSTALLATION INSTRUCTIONS

Steel and Wood Decks

Install fasteners with #3 Phillips drive bit provided in box and a variable speed screw gun. Fastener must penetrate the deck a minimum of ¾” as measured from the underside of the roof deck to the fastener tip. Ensure that fastener is installed perpendicular to surface of roof deck. Care should be taken to not overdrive the fastener causing damage to roof insulation, fastener or roof deck.

Concrete Decks

Pre-drill a 3/16” diameter hole using a drill bit that meets ANSI Standard B212.15 requirements and hammer drill. Drill hole a minimum of ½” deeper than fastener embedment and clean debris from hole. Using the #3 Phillips drill bit provided and a 0 to 1500 rpm screw gun, install fastener to a minimum embedment of 1” until fastener head is properly seated in bar or plate. Care should be taken to not overdrive the fastener causing damage to roof insulation, fastener or roof deck.

Use eye protection when installing fasteners.

PROTECTION & SAFETY

Mule-Hide maintains Material Safety Data Sheets on all of its products. Material Safety Data Sheets contain health and safety information for your development of appropriate product handling procedures to protect your employees and customers. Mule-Hide's Material Safety Data Sheets should be read and understood by all of your supervisory personnel and employees before using Mule-Hide products in your facilities.

MULE-HIDE HDP FASTENERS

LEED INFORMATION

Recycled Content

Postconsumer (1)	15%
Preconsumer (2)	10%
Total Recycled Content (3)	25%
LEED – Eligible Recycled Content (4)	20%

(1) Postconsumer material is defined as waste material generated by households or commercial, industrial and institutional facilities in their role as end-users of the product, which can no longer be used for its intended purposes.
(2) Preconsumer material is defined as material diverted from the waste stream during the manufacturing process. Reutilization of materials (i.e. rework, regrind or scrap generated in a process and capable of being reclaimed within the same process that generated it) is excluded.
(3) Total Recycled Content = Postconsumer Content + Preconsumer Content.
(4) LEED-Eligible Recycled Content = Postconsumer + ½ Preconsumer Content (per LEED Standard). Recycled content value is determined by weight.

ADDITIONAL INFORMATION

The information given on this PDS is subject to change without notice. Always check the Mule-Hide website at www.mulehide.com for the latest information, changes and updates or contact Mule-Hide Products Company at 800-786-1492.

DISCLAIMER

The statements provided concerning the material shown are intended as a guide for material usage and are believed to be true and accurate at the time of printing. No statement made by anyone may supersede this information, except when done in writing by Mule-Hide Products Co., Inc. Since the manner of use is beyond our control, Mule-Hide does not authorize anyone to make any warranty of merchantability or fitness for any particular purpose or any other warranty, guarantee or representation, expressed or implied, concerning this material. This product may be eligible for a Mule-Hide warranty, please check the Mule-Hide website at www.mulehide.com or contact Mule-Hide directly at 800-786-1492 for details. Buyer and user accept the product under these conditions and assume the risk of any failure, any injury person or property (including that of the user), loss or liability resulting from the handling, storage or use of the product whether or not it is handled, stored or used in accordance with the directions or specifications. Mule-Hide must be notified in writing of any claims and be given the opportunity to inspect the alleged failure before repairs are made.

Mule-Hide Products Co., Inc.
1195 Prince Hall Dr.
Beloit, WI 53511

PRODUCT DATA SHEET
PDS 09-5230
Revision Date: OCT-2013

MULE-HIDE EHD FASTENERS

PRODUCT DESCRIPTION

Mule-Hide EHD fasteners (Extra Heavy Duty) are # 15 fasteners manufactured from C-1022 heat treated wire. These fasteners incorporate a No. 3 Phillips recess, flat truss head with a #2 double flute self-drilling point. The drill point has an exclusive tapered entry thread design that allows for fastener penetration into steel roof decks and offers exceptional back-out resistance.

BASIC USES

Mule-Hide's EHD Fasteners are designed specifically for the mechanical attachment of Mule-Hide's reinforced EPDM, TPO and PVC membranes in steel and wood roof decks. Mule-Hide EHD fasteners can also be used for the mechanical attachment of Poly ISO 1 and Poly ISO 2 roof insulation boards and other FM approved insulation / cover boards. The Mule-Hide EHD Fasteners may be used in conjunction with the Mule-Hide 2.4" Seam Plates, 3" Insulation Plates and All Purpose Bars. Refer to Mule-Hide's appropriate Single-Ply Manuals for installation instructions and uses.

SPECIFICATIONS

Wire:	---	SAE C-1022, heat treated wire
Coating:	---	TRU-Kote PC-3
Corrosion Resistance	FM 4470, DIN 50018	<15% Red Rust after 30 cycles
Tensile Strength	ASTM F606-10	4200 lb.
Shear Strength	NASM 1312-20	2400 lb. (thread zone)

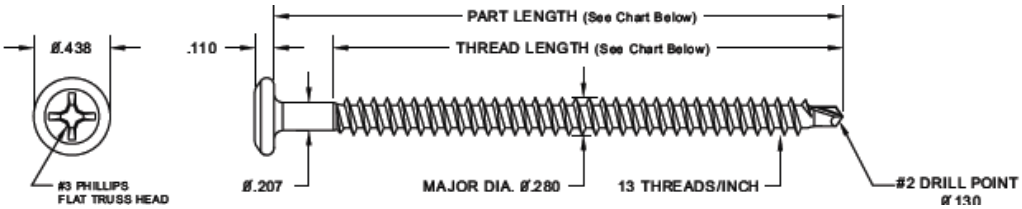

PACKAGING

Screw Length*	Thread Length*	Pieces/Box	Weight/Box
1-1/4"	1-1/4"	1000	12.6 lbs
2"	2"	1000	19.5 lbs
3"	3"	1000	28.2 lbs
4"	3"	1000	37.8 lbs
5"	4"	1000	48.1 lbs
6"	4"	500	27.9 lbs
7	4"	500	33.6 lbs
8"	4"	500	37.3 lbs
9"	4"	250	20.7 lbs
10	4"	250	23.7 lbs
11"	4"	250	25.3 lbs
12"	4"	250	28.9 lbs
14"	4"	250	33.1 lbs
16"	4"	250	36.9 lbs
18"	4"	250	41.7 lbs
20"	4"	250	46.7 lbs
22"	4"	250	51.1lbs
24"	4"	250	56.1 lbs
Screw Length and Thread Length is ± 1/16"			

MULE-HIDE EHD FASTENERS

Performance Information

Average Ultimate Pullout Values in Corrugated Steel Deck Substrates													
Thickness	24 ga.	22 ga.			20 ga.			18 ga.			16 ga.		
Strength, ksi	36.5	33.0	80.0	102.0	33.0	80.0	102.0	33.0	80.0	102.0	33.0	80.0	102.0
Pullout (lbs)	390	465	695	805	605	855	970	925	1125	1215	1175	1370	1460

Average Ultimate Pullout Values in Wood Substrates								
Type	APA Rated OSB				APA Rated Plywood			
Thickness	7/16”	15/32”	19/32”	23/32”	15/32”	19/32”	23/32”	SPF #2
Pullout (lbs)	295	300	310	515	400	525	685	1165*

*lbf./in. of thread penetration including tip.

Pull out values are offered only as a guide and are not guaranteed in any way.
Designated holding powers are dependent upon quality of substrate and accuracy of installation.
Mule-Hide recommends that fastener pull out testing be performed to verify fastener performance.

CODE APPROVALS/COMPLIANCE

Mule-Hide EHD Fasteners comply with the requirements of the following specifications, test and code requirements when properly installed.

* FM Standard 4450/4470 Approval * Metro-Dade Approved *Florida Product Approval

INSTALLATION INSTRUCTIONS

Steel and Wood Decks

Install fasteners with #3 Phillips drive bit provided in box and a variable speed screw gun. Fastener must penetrate the deck a minimum of ¾” as measured from the underside of the roof deck to the fastener tip. Ensure that fastener is installed perpendicular to surface of roof deck. Care should be taken to not overdrive the fastener causing damage to roof insulation, fastener or roof deck. **Use eye protection when installing fasteners.**

LEED INFORMATION

Recycled Content

Postconsumer (1)	15%
Preconsumer (2)	10%
Total Recycled Content (3)	25%
LEED – Eligible Recycled Content (4)	20%

(1) Postconsumer material is defined as waste material generated by households or commercial, industrial and institutional facilities in their role as end-users of the product, which can no longer be used for its intended purposes.
(2) Preconsumer material is defined as material diverted from the waste stream during the manufacturing process. Reutilization of materials (i.e. rework, regrind or scrap generated in a process and capable of being reclaimed within the same process that generated it) is excluded.
(3) Total Recycled Content = Postconsumer Content + Preconsumer Content.
(4) LEED-Eligible Recycled Content = Postconsumer + ½ Preconsumer Content (per LEED Standard). Recycled content value is determined by weight.

MULE-HIDE EHD FASTENERS

PROTECTION & SAFETY

Mule-Hide maintains Material Safety Data Sheets on all of its products. Material Safety Data Sheets contain health and safety information for your development of appropriate product handling procedures to protect your employees and customers. Mule-Hide's Material Safety Data Sheets should be read and understood by all of your supervisory personnel and employees before using Mule-Hide products in your facilities.

ADDITIONAL INFORMATION

The information given on this PDS is subject to change without notice. Always check the Mule-Hide website at www.mulehide.com for the latest information, changes and updates or contact Mule-Hide Products Company at 800-786-1492.

DISCLAIMER

The statements provided concerning the material shown are intended as a guide for material usage and are believed to be true and accurate at the time of printing. No statement made by anyone may supersede this information, except when done in writing by Mule-Hide Products Co., Inc. Since the manner of use is beyond our control, Mule-Hide does not authorize anyone to make any warranty of merchantability or fitness for any particular purpose or any other warranty, guarantee or representation, expressed or implied, concerning this material. This product may be eligible for a Mule-Hide warranty, please check the Mule-Hide website at www.mulehide.com or contact Mule-Hide directly at 800-786-1492 for details. Buyer and user accept the product under these conditions and assume the risk of any failure, any injury person or property (including that of the user), loss or liability resulting from the handling, storage or use of the product whether or not it is handled, stored or used in accordance with the directions or specifications. Mule-Hide must be notified in writing of any claims and be given the opportunity to inspect the alleged failure before repairs are made.

Mule-Hide Products Co., Inc.
1195 Prince Hall Dr.
Beloit, WI 53511

PRODUCT DATA SHEET
PDS 09-6105
Revision Date: OCT-2013

MULE-HIDE ALL PURPOSE BAR

PRODUCT DESCRIPTION

Mule-Hide's All Purpose Bar is a specially extruded aluminum bar without sharp edges.

BASIC USES

Mule-Hide's All Purpose Bar is designed for use as an anchor bar for attachment of the Mule-Hide EPDM membranes. The All Purpose Bar may be installed in the field seam as a batten bar and used at the base of curbs, parapet walls and angle changes as an anchor bar. The All Purpose Bar may also be used with any of the Mule-Hide single-ply membranes as a termination bar. Refer to the Mule-Hide Single-Ply Manuals for specific use and installation instructions.

SPECIFICATIONS

Material: Extruded Aluminum
Dimensions: .050" thick x 1" wide x 10' long per piece.
Holes: 1/4" x 3/8" slotted holes on 6 inch centers.

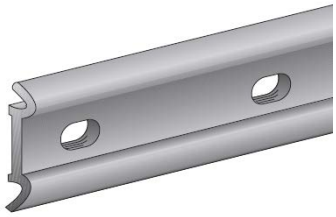

PACKAGING

Packaged: 50 pieces per tube
Approx. shipping weight: 45 lbs per tube

INSTALLATION INSTRUCTIONS

Position Mule-Hide All Purpose Bar as per detail drawings (ribs facing outward or ribs facing inward)
When used as edge termination, ensure that water block sealant has been installed as per appropriate detail drawing, position bar with ribs facing substrate (to form sealant pocket) and attach with appropriate fastener into substrate. When used for base attachment (see appropriate detail) position All Purpose Bar with ribs facing outward and attach with appropriate fastener into substrate.

LEED INFORMATION

Recycled Content

Postconsumer (1)	12%
Preconsumer (2)	32%
Total Recycled Content (3)	44%
LEED – Eligible Recycled Content (4)	28%

(1) Postconsumer material is defined as waste material generated by households or commercial, industrial and institutional facilities in their role as end-users of the product, which can no longer be used for its intended purposes.
(2) Preconsumer material is defined as material diverted from the waste stream during the manufacturing process. Reutilization of materials (i.e. rework, regrind or scrap generated in a process and capable of being reclaimed within the same process that generated it) is excluded.
(3) Total Recycled Content = Postconsumer Content + Preconsumer Content.
(4) LEED-Eligible Recycled Content = Postconsumer + ½ Preconsumer Content (per LEED Standard). Recycled content value is determined by weight.

MULE-HIDE ALL PURPOSE BAR

PROTECTION & SAFETY

Mule-Hide maintains Material Safety Data Sheets on all of its products. Material Safety Data Sheets contain health and safety information for your development of appropriate product handling procedures to protect your employees and customers. Mule-Hide's Material Safety Data Sheets should be read and understood by all of your supervisory personnel and employees before using Mule-Hide products in your facilities.

ADDITIONAL INFORMATION

The information given on this PDS is subject to change without notice. Always check the Mule-Hide website at www.mulehide.com for the latest information, changes and updates or contact Mule-Hide Products Company at 800-786-1492.

DISCLAIMER

The statements provided concerning the material shown are intended as a guide for material usage and are believed to be true and accurate at the time of printing. No statement made by anyone may supersede this information, except when done in writing by Mule-Hide Products Co., Inc. Since the manner of use is beyond our control, Mule-Hide does not authorize anyone to make any warranty of merchantability or fitness for any particular purpose or any other warranty, guarantee or representation, expressed or implied, concerning this material. This product may be eligible for a Mule-Hide warranty, please check the Mule-Hide website at www.mulehide.com or contact Mule-Hide directly at 800-786-1492 for details. Buyer and user accept the product under these conditions and assume the risk of any failure, any injury person or property (including that of the user), loss or liability resulting from the handling, storage or use of the product whether or not it is handled, stored or used in accordance with the directions or specifications. Mule-Hide must be notified in writing of any claims and be given the opportunity to inspect the alleged failure before repairs are made.

Mule-Hide Products Co., Inc.
1195 Prince Hall Dr.
Beloit, WI 53511

PRODUCT DATA SHEET
PDS 09-6210
Revision Date: July-2014

MULE-HIDE POLY ISO 1™ ROOF INSULATION

PRODUCT DESCRIPTION

The Mule-Hide Poly ISO 1™ polyisocyanurate insulation (flat or tapered) is a closed-cell polyisocyanurate foam core laminated to (non-asphaltic) glass fiber reinforced felt facers. The Mule-Hide Poly ISO 1 is compatible with all Mule-Hide membranes and accessories. Available in 20 psi and 25 psi.

BASIC USES

The Mule-Hide Poly ISO 1™ insulation board may be used for ballasted, mechanically attached and fully adhered single- ply roofing systems. The Poly ISO 1™ insulation board may be installed over approved decks and substrates on new construction, tearoffs, and recover (retrofit) projects. The Poly ISO 1™ insulation board may be used in UL Class A and FM Class 1 assemblies.

TYPICAL PHYSICAL PROPERTIES

Property	Test Method	Typical Results
Dimensional Stability	ASTM D-2126	2% Linear Change (7 days)
Compressive Strength	ASTM D-1621	20 PSI (Grade 2) 25 PSI (Grade3)
Water Absorption	ASTM D-209	Less than 1% By Volume
Moisture Vapor Transmission	ASTM E-96	Less than One (1) Perm
Service Temperature	---	-100°F to 250°F Max
*The physical properties above are presented as typical average values as determined by accepted ASTM test methods and are subject to change. All information can be confirmed by contacting Mule-Hide Products.		

Poly ISO 1™				
Nominal Thickness** (Inches)	(mm)	LTTR R-Value (revised Jan-2014)	C-Value	Metal Deck Max. Flute
1.0	25	5.7	.175	2 ⅝
1.5	38	8.6	.116	4 ⅜
1.8	46	10.3	.097	4 ⅜
2.0	51	11.4	.088	4 ⅜
2.5	64	14.4	.069	4 ⅜
2.6	66	15.0	.067	4 ⅜
3.0	76	17.4	.057	4 ⅜
3.5	89	20.5	.049	4 ⅜
3.8	97	22.3	.045	4 ⅜
4.0	102	23.6	.042	4 ⅜
4.3	109	25.5	.039	4 ⅜
4.5	114	26.8	.037	4 ⅜
*Long Term Thermal Resistance Values are based on ASTM C1289 (revised Jan-2014) and CAN/ULC S770 which provides for a 15-year time weighted average. **Other thicknesses available upon special request.				

MULE-HIDE POLY ISO 1™ ROOF INSULATION

LTTR Value	**ASTM C1289-11** (revised Jan-2014)
20	2 layers of 1.8" Poly ISO
25	2 layers of 2.2" Poly ISO
30	2 layers of 2.6" Poly ISO
35	2 layers of 3.1" Poly ISO
40	2 layers of 3.5" Poly ISO

Poly ISO 1 Recycle Content
Between 16% and 43% by weight, depending upon thickness (55% post consumer and 45% post industrial). Refer to LEED Memo for Mule-Hide Products.

PACKAGING

Factory applied packaging is only intended for protection during transit. When stored outside or at the job site, the insulation must be stored at least 4" above ground level and completely covered with a weatherproof covering such as a tarpaulin. **Warning - Do Not Leave Exposed:** This product will burn if exposed to an ignition source of sufficient heat and intensity, or an open flame.

CODE APPROVALS/COMPLIANCE

Poly ISO 1™ complies with the requirements of the following specifications, test and code requirements when properly installed.

* Federal Specification HH-I-1972/GEN and HH-I-1972/2, Class 1
* ASTM C 1289-05a, Type II, Class 1, Grade 2 (20 psi), Grade 3 (25 psi)
* FM Standard 4450/4470 Approval, Class 1
* UL Standard 1256 Classification
* UL Standard 790 Classification
* UL Standard 263 Fire Resistance Classification

Mule-Hide Poly ISO 1™ is manufactured with NexGen Chemistry: Contains no CFCs, HCFCs, is Zero ODP, EPA Compliant and has virtually no GWP

INSTALLATION INSTRUCTIONS

Ballasted Single-Ply Membrane Systems - Mule-Hide Poly ISO 1™ does not require attachment to the deck in this system. All boards must be tightly fitted together to prevent movement, separation or damage during the installation of the membrane system. All gaps greater than 1/4" must be filled. After the membrane is installed, sufficient amounts of ballast must be applied to prevent membrane and insulation movement. Refer to the Mule-Hide Manual and FM Loss Prevention Data Sheet 1-29 for information regarding ballasting guidelines.

Mechanically Attached Single-Ply Membrane Systems - Mule-Hide Poly ISO 1™ should be attached with Mule-Hide fasteners and insulation plates (or FM Approved fasteners) using a minimum of 4 fasteners per 4'x 4' board (1 fastener per 4 square feet) and a minimum of 6 fasteners per 4'x 8' board (1 fastener per 5.33 square feet).
Refer to the Mule-Hide Manual for proper fastener placement.

Fully Adhered Single-Ply Membrane Systems - Mule-Hide Poly ISO 1™ should be installed with the perforated side down. Insulation attachment will vary depending upon insulation thickness and job requirements. If the top layer is less than 2" thick, install a minimum of 8 fasteners per 4'x 4' board (1 fastener per 2 square feet) and a minimum of 16 fasteners per 4'x 8' board (1 fastener per 2 square feet). If the top layer is 2" thick or thicker, install 4 fasteners per 4' x 4' or 8 fasteners per 4' x 8' insulation board. Refer to the Mule-Hide Manual for proper fastener density and placement. Additional fastening may be required for certain job conditions.

MULE-HIDE POLY ISO 1™ ROOF INSULATION

Fully Adhered Single-Ply Membrane Systems - continued
In some instances hot steep asphalt or insulation adhesive may be used to attach the Mule-Hide Poly ISO 1™ to approved concrete decks. Only 4'x 4' boards may be used. Contact Mule-Hide's Technical Department for specific requirements and procedures.

PROTECTION & SAFETY

Mule-Hide maintains Material Safety Data Sheets on all of its products. Material Safety Data Sheets contain health and safety information for your development of appropriate product handling procedures to protect your employees and customers. Mule-Hide's Material Safety Data Sheets should be read and understood by all of your supervisory personnel and employees before using Mule-Hide products in your facilities.

ADDITIONAL INFORMATION

The information given on this PDS is subject to change without notice. Always check the Mule-Hide website at www.mulehide.com for the latest information, changes and updates or contact Mule-Hide Products Company at 800-786-1492.

DISCLAIMER

The statements provided concerning the material shown are intended as a guide for material usage and are believed to be true and accurate at the time of printing. No statement made by anyone may supersede this information, except when done in writing by Mule-Hide Products Co., Inc. Since the manner of use is beyond our control, Mule-Hide does not authorize anyone to make any warranty of merchantability or fitness for any particular purpose or any other warranty, guarantee or representation, expressed or implied, concerning this material. This product may be eligible for a Mule-Hide warranty, please check the Mule-Hide website at www.mulehide.com or contact Mule-Hide directly at 800-786-1492 for details. Buyer and user accept the product under these conditions and assume the risk of any failure, any injury person or property (including that of the user), loss or liability resulting from the handling, storage or use of the product whether or not it is handled, stored or used in accordance with the directions or specifications. Mule-Hide must be notified in writing of any claims and be given the opportunity to inspect the alleged failure before repairs are made.

Mule-Hide Products Co., Inc.
1195 Prince Hall Dr.
Beloit, WI 53511

PRODUCT DATA SHEET
PDS 09-6215
Revision Date: June-2014

MULE-HIDE Poly ISO 2™ ROOF INSULATION

PRODUCT DESCRIPTION

The Mule-Hide Poly ISO 2™ polyisocyanurate insulation (flat or tapered) is a closed-cell polyisocyanurate foam core laminated to heavy, (non-asphaltic) glass fiber reinforced felt facers. The Mule-Hide Poly ISO 2™ is compatible with all Mule-Hide membranes and accessories. Available in 20 and 25 psi densities.

BASIC USES

Mule-Hide Poly ISO 2™ insulation board may be used for ballasted, mechanically attached and fully adhered single-ply roofing systems. Poly ISO 2™ insulation board may be installed over approved decks and substrates on new construction, tearoffs, and recover (retrofit) projects. Rated for use in UL Class A and FM Class 1 assemblies.

TYPICAL PHYSICAL PROPERTIES

Property	Test Method	Typical Results
Dimensional Stability	ASTM D-2126	Less than 2% Linear Change
Compressive Strength	ASTM D-1621 (10% deformation)	20 PSI or 25 PSI
Water Absorption	ASTM C-209, ASTM D-2842	< 1.5%, < 3.5%
Moisture Vapor Transmission	ASTM E-96	Less than 1.5 Perm
Product Density	ASTM D-1622	Nominal 2.0 lbs per cubic foot
Flame Spread (foam core)	ASTM E-84 (full 10 min. test)	40 to 60*
Smoke Developed	ASTM E-84 (full 10 min. test)	50 to 170*
Service Temperature	---	-100°F to +250°F Max**
Tensile Strength	ASTM D-1623	>730 psf (35 kPa)

* The numerical ratings are determined by ASTM Test Method E-84 are not intended to reflect hazards presented by this or any other material under actual fire conditions. A flame spread index of 75 or less and smoke development of 450 or less meet code requirements regarding flame spread and smoke development for foam plastic roof insulation. However, the codes exempt foam plastic insulation when used in roof deck constructions that comply as an assembly with FM 4450 or UL 1256 (see IBC, NBC, UBC and SBS Sections on Foam Plastic Insulation (Chapter 26). Smoke development does not apply to roofing.
**ASTM C1289 Standard Specification for Faced Rigid Cellular Polyisocyanurate Thermal Insulation. The physical properties above are presented as typical average values as determined by accepted ASTM test methods and are subject normal manufacturing variation.

LTTR R-Value[1] (Revised Jan-2014)	Thickness[2]		RSI[4]	Flute Spanability	
	Inches	mm		Inches	mm
5.7	1.0	25.4	1.00	2.625	66.68
8.6	1.5	38.1	1.51	4.375	111.13
11.4	2.0	50.8	2.01	4.375	111.13
14.4	2.5	63.5	2.53	4.375	111.13
17.4	3.0[3]	76.2	3.06	4.375	111.13
20.5	3.5[3]	88.9	3.61	4.375	111.13
23.6	4.0[3]	101.6	4.16	4.375	111.13

1. LTTR (Long Term Thermal Resistance) values were determined in accordance with CAN/ULC-S770 and ASTM C1289 (Revised Jan-2014), Annex A1. All test samples were third-party selected and tested by an accredited material testing laboratory. The LTTR results were reviewed and authorized by FM Approvals and certified by the PIMA Quality Mark Program
2. Other thicknesses available upon special request
3. Multi-layer application is suggested when the total insulation thickness exceeds 2.7″.
4. RSI is the metric expression of R-value (m^2 * K/W)

MULE-HIDE Poly ISO 2™ ROOF INSULATION

LTTR Value	**ASTM C1289-11** (revised Jan-2014)
20	2 layers of 1.8” Poly ISO 2
25	2 layers of 2.2” Poly ISO 2
30	2 layers of 2.6” Poly ISO 2
35	2 layers of 3.1” Poly ISO 2
40	2 layers of 3.5” Poly ISO 2

Poly ISO 2™ Recycle Content

Between 52.9% and 28.9% recycled materials by weight.

Refer to LEED Memo for Mule-Hide Products.

PACKAGING

Factory applied packaging is only intended for protection during transit. When stored outside or at the job site, the insulation must be stored at least 4" above ground level and completely covered with a weatherproof covering such as a tarpaulin. **Warning - Do Not Leave Exposed:** This product will burn if exposed to an ignition source of sufficient heat and intensity, or an open flame.

CODE APPROVALS/COMPLIANCE

Poly ISO 2™ complies with the requirements of the following specifications, test and code requirements when properly installed.

* Federal Specification HH-I-1972/GEN and HH-I-1972/2, Class 1 (have been cancelled)
* ASTM C 1289, Type II, Class 1, Grade 2 (20 psi) or Grade 3 (25 psi)
* CAN/ULC-S704 Type 2, Class 3 or Type 3, Class 3
* FM Standard 4450/4470 Approval, Class 1
* UL Standard 1256 Classification
* UL Standard 790 Classification
* UL Standard 263 Fire Resistance Classification

Mule-Hide Poly ISO 2™ is manufactured using CFC-, HCFC-, and HFC-free foam blowing technology with zero ozone depletion potential (ODP) and virtually no (negligible) global warming potential (GWP).

INSTALLATION INSTRUCTIONS

Ballasted Single-Ply Membrane Systems - Mule-Hide Poly ISO 2™ does not require attachment to the deck in this system. All boards must be tightly fitted together to prevent movement, separation or damage during the installation of the membrane system. All gaps greater than 1/4" must be filled. After the membrane is installed, sufficient amounts of ballast must be applied to prevent membrane and insulation movement. Refer to the Mule-Hide Manual and FM Loss Prevention Data Sheet 1-29 for information regarding ballasting guidelines.

Mechanically Attached Single-Ply Membrane Systems - Mule-Hide Poly ISO 2™ should be attached with Mule-Hide fasteners and insulation plates (or FM Approved fasteners) using a minimum of 4 fasteners per 4'x 4' board (1 fastener per 4 square feet) and a minimum of 6 fasteners per 4'x 8' board (1 fastener per 5.33 square feet). Refer to the Mule-Hide Manual for proper fastener placement.

Fully Adhered Single-Ply Membrane Systems - Mule-Hide Poly ISO 2™ should be installed with the perforated side down. Insulation attachment will vary depending upon insulation thickness and job requirements. If the top layer is less than 2” thick, install a minimum of 8 fasteners per 4'x 4' board (1 fastener per 2 square feet) and a minimum of 16 fasteners per 4'x 8' board (1 fastener per 2 square feet). If the top layer is 2” thick or thicker, install 4 fasteners per 4’ x 4’ or 8 fasteners per 4’ x 8’ insulation board. Refer to the Mule-Hide Manual for proper fastener density and placement. Additional fastening may be required for certain job conditions.

In some instances hot steep asphalt or insulation adhesive may be used to attach the Mule-Hide Poly ISO 2™ to approved concrete decks. Only 4'x 4' boards may be used. Contact Mule-Hide's Technical Department for specific requirements and procedures.

MULE-HIDE Poly ISO 2™ ROOF INSULATION

PROTECTION & SAFETY

Mule-Hide maintains Material Safety Data Sheets on all of its products. Material Safety Data Sheets contain health and safety information for your development of appropriate product handling procedures to protect your employees and customers. Mule-Hide's Material Safety Data Sheets should be read and understood by all of your supervisory personnel and employees before using Mule-Hide products in your facilities.

ADDITIONAL INFORMATION

The information given on this PDS is subject to change without notice. Always check the Mule-Hide website at www.mulehide.com for the latest information, changes and updates or contact Mule-Hide Products Company at 800-786-1492.

DISCLAIMER

The statements provided concerning the material shown are intended as a guide for material usage and are believed to be true and accurate at the time of printing. No statement made by anyone may supersede this information, except when done in writing by Mule-Hide Products Co., Inc. Since the manner of use is beyond our control, Mule-Hide does not authorize anyone to make any warranty of merchantability or fitness for any particular purpose or any other warranty, guarantee or representation, expressed or implied, concerning this material. This product may be eligible for a Mule-Hide warranty, please check the Mule-Hide website at www.mulehide.com or contact Mule-Hide directly at 800-786-1492 for details. Buyer and user accept the product under these conditions and assume the risk of any failure, any injury person or property (including that of the user), loss or liability resulting from the handling, storage or use of the product whether or not it is handled, stored or used in accordance with the directions or specifications. Mule-Hide must be notified in writing of any claims and be given the opportunity to inspect the alleged failure before repairs are made.

Mule-Hide Products Co., Inc.
1195 Prince Hall Dr.
Beloit, WI 53511

PRODUCT DATA SHEET
PDS 09-6220
Revision Date: Jan 2012

MULE-HIDE POLY ISO 1-HD (Cover Board)

PRODUCT DESCRIPTION

Mule-Hide Poly ISO 1-HD is ½" thick, high density polyisocyanurate insulation board that was specifically designed for use as a cover board. This product consists of a closed-cell polyisocyanurate foam core laminated to premium performance coated glass fiber felt facers. Mule-Hide Poly ISO 1-HD is compatible with all Mule-Hide membranes and accessories. In addition to providing a durable underlayment roofing membranes, Poly ISO HD-1 has a R-value of 2.5 which is significantly higher than that of other cover board products such as woodfiber or gypsum.

BASIC USES

Mule-Hide Poly ISO 1-HD is designed for use as a cover board over roof insulation boards or existing membranes. It is compatible with Single-Ply roofing systems (ballasted, mechanically attached and fully adhered) and Modified Bitumen Roofing Systems, on new construction, tearoff, and recover (retrofit) projects. Suitable for use with approved fasteners and plates, and low-rise adhesive. Poly ISO 1-HD can achieve a FM hail resistance rating of SH-1 with certain membranes.

TYPICAL PHYSICAL PROPERTIES (polyisocyanurate foam core only)

Property	Test Method	Typical Results
Dimensional Stability	ASTM D-2126	Less than 0.5% Linear Change
Compressive Strength	ASTM D-1621	>100 psi
Water Absorption	ASTM D-209	Less than 1% By Volume
Resistance to Mold	ASTM D-3273	Passed (10)
Service Temperature	---	260°F or less
Recycled Content	---	>8%
R-Value @ ½" (13 mm)	ASTM C-518	2.5
*The physical properties above are presented as typical average values as determined by accepted ASTM test methods and are subject to change. All information can be confirmed by contacting Mule-Hide Products.		

PACKAGING

PACKAGING & WEIGHT		
Weight	11 lbs. per 4' x 8' panel	0.3431 lbs / sq. ft.
Packaging	96 pieces per bundle	

Factory applied packaging is only intended for protection during transit. When stored outside or at the job site, the insulation must be stored at least 4" above ground level and completely covered with a weatherproof covering such as a tarpaulin. **Warning - Do Not Leave Exposed:** This product will burn if exposed to an ignition source of sufficient heat and intensity, or an open flame.

CODE APPROVALS/COMPLIANCE

Poly ISO 1-hd complies with the requirements of the following specifications, test and code requirements when properly installed.

* ASTM E-108
*FM Approved – consult RoofNav for specific assemblies
*UL Classified 790

Mule-Hide Poly ISo 1 is manufactured with NexGen Chemistry™ – Zero ODP, CFC Free, EPA Compliant.

MULE-HIDE POLY ISO 1-HD (Cover Board)

INSTALLATION INSTRUCTIONS

General
All boards must be tightly fitted together to prevent movement, separation or damage during the installation of the membrane system. All gaps greater than 1/4" must be filled.

Ballasted Single-Ply Membrane Systems - Mule-Hide Poly ISO 1-HD does not require attachment to the deck in this system. Sufficient amounts of ballast must be applied to prevent membrane and insulation movement. Refer to the Mule-Hide Manual and FM Loss Prevention Data Sheet 1-29 for information regarding ballasting guidelines.

Mechanically Attached Single-Ply Membrane Systems - Mule-Hide Poly ISO 1-HD should be attached with Mule-Hide fasteners and insulation plates (or FM Approved fasteners) using a minimum of 4 fasteners per 4'x 4' board (1 fastener per 4 square feet) and a minimum of 6 fasteners per 4'x 8' board (1 fastener per 5.33 square feet). Refer to the Mule-Hide Manual for proper fastener placement.

Fully Adhered Single-Ply Membrane Systems - Mule-Hide Poly ISO 1-HD should be attached using a minimum of 8 fasteners per 4'x 4' board (1 fastener per 2 square feet) and a minimum of 16 fasteners per 4'x 8' board (1 fastener per 2 square feet). Refer to the Mule-Hide Manual for proper fastener placement.

Attachment - In some instances insulation adhesive may be used to attach the Mule-Hide Poly ISO 1-HD to approved substrates. Only 4'x 4' boards may be used. Contact Mule-Hide's Technical Department for specific requirements and procedures.

PROTECTION & SAFETY

Mule-Hide maintains Material Safety Data Sheets on all of its products. Material Safety Data Sheets contain health and safety information for your development of appropriate product handling procedures to protect your employees and customers. Mule-Hide's Material Safety Data Sheets should be read and understood by all of your supervisory personnel and employees before using Mule-Hide products in your facilities.

ADDITIONAL INFORMATION

The information given on this PDS is subject to change without notice. Always check the Mule-Hide website at www.mulehide.com for the latest information, changes and updates or contact Mule-Hide Products Company at 800-786-1492.

DISCLAIMER

Mule-Hide Products Co., Inc.
1195 Prince Hall Dr.
Beloit, WI 53511

PRODUCT DATA SHEET
PDS 09-6235
Revision Date: May-2014

MULE-HIDE POLY ISO 1™-CG ROOF INSULATION

PRODUCT DESCRIPTION

Mule-Hide Poly ISO™-CG 1 polyisocyanurate insulation (flat or tapered) is a closed-cell polyisocyanurate foam core laminated to *premium* glass fiber reinforced felt facers. Mule-Hide Poly ISO™-CG 1 is compatible with Single-Ply membranes (Ballasted, Mechanically Attached and Fully Adhered), BUR, Coal-Tar and Modified Bitumen. Available in 20 psi and 25 psi.

BASIC USES

Mule-Hide Poly ISO™-CG 1 insulation board may be used for ballasted, mechanically attached and fully adhered single-ply roofing systems, as well as BUR, Coal-Tar and Modified Bitumen. Mule-Hide Poly ISO™-CG 1 insulation board may be installed over approved decks and substrates on new construction, tearoffs, and recover (retrofit) projects. Poly ISO™-CG 1 insulation board may be used in UL Class A and FM Class 1 assemblies.

Achieves UL Class A and Class B fire ratings over combustible (i.e. wood) decks without the need for a fire rated slip sheet or gypsum cover board.

UL Class A fire rating when installed as a min 3” thick layer over a combustible deck.

UL Class B fire rating when installed as a min 1.9” thick layer over a combustible deck

TYPICAL PHYSICAL PROPERTIES

Property	Test Method	Typical Results
Dimensional Stability	ASTM D-2126	2% Linear Change (7 days)
Compressive Strength	ASTM D-1621	20 PSI (Grade 2) 25 PSI (Grade3)
Water Absorption	ASTM D-209	Less than 1% By Volume
Moisture Vapor Transmission	ASTM E-96	Less than One (1) Perm
Resistance to Mold	ASTM D-3273	Passed (10)
Service Temperature	---	-100°F to 250°F Max

*The physical properties above are presented as typical average values as determined by accepted ASTM test methods and are subject to change. All information can be confirmed by contacting Mule-Hide Products.

Poly ISO™-CG 1				
Nominal Thickness** (Inches)	(mm)	LTTR R-Value (revised Jan-2014)	C-Value	Metal Deck Max. Flute
1.0	25	5.6	.178	2 ⅝
1.5	38	8.5	.118	4 ⅜
1.6	41	9.1	.110	4 ⅜
1.7	43	9.6	.104	4 ⅜
2.0	51	11.4	.088	4 ⅜
2.5	64	14.4	.069	4 ⅜
2.6	66	15.0	.066	4 ⅜
3.0	76	17.4	.057	4 ⅜
3.5	89	20.5	.049	4 ⅜
3.8	97	22.3	.045	4 ⅜
4.0	102	23.6	.042	4 ⅜
4.5	114	26.8	.037	4 ⅜

*Long Term Thermal Resistance Values are based on ASTM C1289 (revised Jan-2014) and CAN/ULC S770 which provides for a 15-year time weighted average.
**Other thicknesses available upon special request.

MULE-HIDE POLY ISO 1™-CG ROOF INSULATION

LTTR Value	**ASTM C1289-11** (revised Jan-2014)
20	2 layers of 1.8" Poly ISO
25	2 layers of 2.2" Poly ISO
30	2 layers of 2.6" Poly ISO
35	2 layers of 3.1" Poly ISO
40	2 layers of 3.5" Poly ISO

Poly ISO™-CG 1 Recycle Content

Between 16% and 43% by weight, depending upon **thickness** (55% post consumer and 45% post industrial). Refer to LEED Memo for Mule-Hide Products.

PACKAGING

Factory applied packaging is only intended for protection during transit. When stored outside or at the job site, the insulation must be stored at least 4" above ground level and completely covered with a weatherproof covering such as a tarpaulin. **Warning - Do Not Leave Exposed:** This product will burn if exposed to an ignition source of sufficient heat and intensity, or an open flame.

CODE APPROVALS/COMPLIANCE

Poly ISO™-CG 1 complies with the requirements of the following specifications, test and code requirements when properly installed.

* ASTM C 1289-05a, Type II, Class 1, Grade 2 (20 psi), Grade 3 (25 psi)
* FM Standard 4450/4470 Approval, Class 1
* UL Standard 1256 Classification
* UL Standard 790 Classification
* UL Standard 263 Fire Resistance Classification
* International Building Code (IBC) Chapter 26

Mule-Hide Poly ISO™-CG 1 is manufactured with NexGen Chemistry™: Contains no CFCs, HCFCs is Zero ODP, EPA Compliant, and has virtually no GWP.

INSTALLATION INSTRUCTIONS

Ballasted Single-Ply Membrane Systems - Mule-Hide Poly ISO™-CG 1 does not require attachment to the deck in this system. All boards must be tightly fitted together to prevent movement, separation or damage during the installation of the membrane system. All gaps greater than 1/4" must be filled. After the membrane is installed, sufficient amounts of ballast must be applied to prevent membrane and insulation movement. Refer to the Mule-Hide Manual and FM Loss Prevention Data Sheet 1-29 for information regarding ballasting guidelines.

Mechanically Attached Single-Ply Membrane Systems - Mule-Hide Poly ISO™-CG 1 should be attached with Mule- Hide fasteners and insulation plates (or FM Approved fasteners) using a minimum of 4 fasteners per 4'x 4' board (1 fastener per 4 square feet) and a minimum of 6 fasteners per 4'x 8' board (1 fastener per 5.33 square feet). Refer to the Mule-Hide Manual for proper fastener placement.

Fully Adhered Single-Ply Membrane Systems - Mule-Hide Poly ISO™-CG 1 should be installed with the perforated side down. Insulation attachment will vary depending upon insulation thickness and job requirements. If the top layer is less than 2" thick, install a minimum of 8 fasteners per 4'x 4' board (1 fastener per 2 square feet) and a minimum of 16 fasteners per 4'x 8' board (1 fastener per 2 square feet). If the top layer is 2" thick or thicker, install 4 fasteners per 4' x 4' or 8 fasteners per 4' x 8' insulation board. Refer to the Mule-Hide Manual for proper fastener density and placement. Additional fastening may be required for certain job conditions.

MULE-HIDE POLY ISO 1™-CG ROOF INSULATION

Fully Adhered Single-Ply Membrane Systems - continued
In some instances hot steep asphalt or insulation adhesive may be used to attach the Mule-Hide Poly ISO™-CG 1 to approved concrete decks. Only 4'x 4' boards may be used. Contact Mule-Hide's Technical Department for specific requirements and procedures.

Built Up, Coal Tar and Modified Bitumen
Mule-Hide Poly ISO™-CG 1 is to be secured to the roof deck with fasteners and plates. Insulation may also be adhered to a prepared concrete roof deck or subsequent layers of insulation with a full moping of hot steep asphalt, insulation adhesive or cold applied adhesive using maximum 4' x 4' board sizes. Install the roof cover according to the manufacturer's specifications.

PROTECTION & SAFETY

Mule-Hide maintains Material Safety Data Sheets on all of its products. Material Safety Data Sheets contain health and safety information for your development of appropriate product handling procedures to protect your employees and customers. Mule-Hide's Material Safety Data Sheets should be read and understood by all of your supervisory personnel and employees before using Mule-Hide products in your facilities.

ADDITIONAL INFORMATION

The information given on this PDS is subject to change without notice. Always check the Mule-Hide website at www.mulehide.com for the latest information, changes and updates or contact Mule-Hide Products Company at 800-786-1492.

DISCLAIMER

The statements provided concerning the material shown are intended as a guide for material usage and are believed to be true and accurate at the time of printing. No statement made by anyone may supersede this information, except when done in writing by Mule-Hide Products Co., Inc. Since the manner of use is beyond our control, Mule-Hide does not authorize anyone to make any warranty of merchantability or fitness for any particular purpose or any other warranty, guarantee or representation, expressed or implied, concerning this material. This product may be eligible for a Mule-Hide warranty, please check the Mule-Hide website at www.mulehide.com or contact Mule-Hide directly at 800-786-1492 for details. Buyer and user accept the product under these conditions and assume the risk of any failure, any injury person or property (including that of the user), loss or liability resulting from the handling, storage or use of the product whether or not it is handled, stored or used in accordance with the directions or specifications. Mule-Hide must be notified in writing of any claims and be given the opportunity to inspect the alleged failure before repairs are made.

Mule-Hide Products Co., Inc.
1195 Prince Hall Dr.
Beloit, WI 53511

PRODUCT DATA SHEET
PDS 09-6240
Revision Date: Aug-2014

MULE-HIDE Poly ISO 2-GF ROOF INSULATION

PRODUCT DESCRIPTION

Mule-Hide Poly ISO 2-GF polyisocyanurate insulation (flat or tapered) is a closed-cell polyisocyanurate foam core bonded to inorganic coated glass facers. The Mule-Hide Poly ISO 2-GF insulation is compatible with all Mule-Hide membranes and accessories. Available in 20 and 25 psi densities.

BASIC USES

Mule-Hide Poly ISO 2™ insulation board may be used for ballasted, mechanically attached and fully adhered single-ply roofing systems. Poly ISO 2-GF insulation board may be installed over approved decks and substrates on new construction, tearoffs, and recover (retrofit) projects.

TYPICAL PHYSICAL PROPERTIES

Property	Test Method	Typical Results
Dimensional Stability	ASTM D-2126	Less than 2% Linear Change
Compressive Strength	ASTM D-1621 (10% deformation)	20 PSI or 25 PSI
Water Absorption	ASTM C-209, ASTM D-2842	< 1.5%, < 3.5%
Moisture Vapor Transmission	ASTM E-96	Less than 4.0 Perm
Product Density	ASTM D-1622	Nominal 2.0 lbs per cubic foot
Flame Spread (foam core)	ASTM E-84 (full 10 min. test)	40 to 60*
Smoke Developed	ASTM E-84 (full 10 min. test)	50 to 170*
Service Temperature	---	-100°F to +250°F Max**
Tensile Strength	ASTM D-1623	>730 psf (35 kPa)

* The numerical ratings are not intended to reflect performance under actual fire conditions. A flame spread index of 75 or less and smoke development of 450 or less meet code requirements regarding flame spread and smoke development for foam plastic roof insulation. However, the codes exempt foam plastic insulation when used in roof deck constructions that comply as an assembly with FM 4450 or UL 1256.

**ASTM C1289 Standard Specification for Faced Rigid Cellular Polyisocyanurate Thermal Insulation. The physical properties above are presented as typical average values as determined by accepted ASTM test methods and are subject normal manufacturing variation.

LTTR R-Value[1] (Revised Jan-2014)	Thickness[2]		RSI[4]	Flute Spanability	
	Inches	mm		Inches	mm
5.7	1.0	25.4	1.00	2.625	66.68
8.6	1.5	38.1	1.51	4.375	111.13
11.4	2.0	50.8	2.01	4.375	111.13
14.4	2.5	63.5	2.53	4.375	111.13
17.4	3.0[3]	76.2	3.06	4.375	111.13
20.5	3.5[3]	88.9	3.61	4.375	111.13
23.6	4.0[3]	101.6	4.16	4.375	111.13

1. LTTR (Long Term Thermal Resistance) values were determined in accordance with CAN/ULC-S770 and ASTM C1289 (Revised Jan-2014), Annex A1. All test samples were third-party selected and tested by an accredited material testing laboratory. The LTTR results were reviewed and authorized by FM Approvals and certified by the PIMA Quality Mark Program
2. Other thicknesses available upon special request
3. Multi-layer application is suggested when the total insulation thickness exceeds 2.7″.
4. RSI is the metric expression of R-value (m^2 * K/W)

MULE-HIDE Poly ISO 2-GF ROOF INSULATION

LTTR Value	**ASTM C1289-11** (revised Jan-2014)
20	2 layers of 1.8” Poly ISO 2
25	2 layers of 2.2” Poly ISO 2
30	2 layers of 2.6” Poly ISO 2
35	2 layers of 3.1” Poly ISO 2
40	2 layers of 3.5” Poly ISO 2

Poly ISO 2-GF Recycle Content

Between 11.2% and 6.2% recycled materials by weight.

Refer to LEED Memo for Mule-Hide Products.

PACKAGING

Factory applied packaging is only intended for protection during transit. When stored outside or at the job site, the insulation must be stored at least 4" above ground level and completely covered with a weatherproof covering such as a tarpaulin. **Warning - Do Not Leave Exposed:** This product will burn if exposed to an ignition source of sufficient heat and intensity, or an open flame.

CODE APPROVALS/COMPLIANCE

Poly ISO 2-GF complies with the requirements of the following specifications, test and code requirements when properly installed.

* ASTM C 1289, Type II, Class 2, Grade 2 (20 psi) or Grade 3 (25 psi)
* CAN/ULC-S704 Type 2, Class 3 or Type 3, Class 3

Mule-Hide Poly ISO 2-GF is manufactured using CFC-, HCFC-, and HFC-free foam blowing technology with zero ozone depletion potential (ODP) and virtually no (negligible) global warming potential (GWP).

INSTALLATION INSTRUCTIONS

Ballasted Single-Ply Membrane Systems - Mule-Hide Poly ISO 2-GF does not require attachment to the deck in this system. All boards must be tightly fitted together to prevent movement, separation or damage during the installation of the membrane system. All gaps greater than 1/4" must be filled. After the membrane is installed, sufficient amounts of ballast must be applied to prevent membrane and insulation movement. Refer to the Mule-Hide Manual and FM Loss Prevention Data Sheet 1-29 for information regarding ballasting guidelines.

Mechanically Attached Single-Ply Membrane Systems - Mule-Hide Poly ISO 2-GF should be attached with Mule-Hide fasteners and insulation plates (or FM Approved fasteners) using a minimum of 4 fasteners per 4'x 4' board (1 fastener per 4 square feet) and a minimum of 6 fasteners per 4'x 8' board (1 fastener per 5.33 square feet). Refer to the Mule-Hide Manual for proper fastener placement.

Fully Adhered Single-Ply Membrane Systems - Mule-Hide Poly ISO 2-GF should be installed with the perforated side down. Insulation attachment will vary depending upon insulation thickness and job requirements. If the top layer is less than 2” thick, install a minimum of 8 fasteners per 4'x 4' board (1 fastener per 2 square feet) and a minimum of 16 fasteners per 4'x 8' board (1 fastener per 2 square feet). If the top layer is 2” thick or thicker, install 4 fasteners per 4’ x 4’ or 8 fasteners per 4’ x 8’ insulation board. Refer to the Mule-Hide Manual for proper fastener density and placement. Additional fastening may be required for certain job conditions.

In some instances hot steep asphalt or insulation adhesive may be used to attach the Mule-Hide Poly ISO 2-GF to approved concrete decks. Only 4'x 4' boards may be used. Contact Mule-Hide's Technical Department for specific requirements and procedures.

MULE-HIDE Poly ISO 2-GF ROOF INSULATION

PROTECTION & SAFETY

Mule-Hide maintains Material Safety Data Sheets on all of its products. Material Safety Data Sheets contain health and safety information for your development of appropriate product handling procedures to protect your employees and customers. Mule-Hide's Material Safety Data Sheets should be read and understood by all of your supervisory personnel and employees before using Mule-Hide products in your facilities.

ADDITIONAL INFORMATION

The information given on this PDS is subject to change without notice. Always check the Mule-Hide website at www.mulehide.com for the latest information, changes and updates or contact Mule-Hide Products Company at 800-786-1492.

DISCLAIMER

The statements provided concerning the material shown are intended as a guide for material usage and are believed to be true and accurate at the time of printing. No statement made by anyone may supersede this information, except when done in writing by Mule-Hide Products Co., Inc. Since the manner of use is beyond our control, Mule-Hide does not authorize anyone to make any warranty of merchantability or fitness for any particular purpose or any other warranty, guarantee or representation, expressed or implied, concerning this material. This product may be eligible for a Mule-Hide warranty, please check the Mule-Hide website at www.mulehide.com or contact Mule-Hide directly at 800-786-1492 for details. Buyer and user accept the product under these conditions and assume the risk of any failure, any injury person or property (including that of the user), loss or liability resulting from the handling, storage or use of the product whether or not it is handled, stored or used in accordance with the directions or specifications. Mule-Hide must be notified in writing of any claims and be given the opportunity to inspect the alleged failure before repairs are made.

Georgia-Pacific

DensDeck®
Prime Roof Board

Technical Service Hotline 1.800.225.6119 or
www.densdeck.com

Manufacturer

Georgia-Pacific Gypsum
133 Peachtree Street
Atlanta, GA 30303

Georgia-Pacific Canada
2180 Meadowvale Boulevard, Suite 200
Mississauga, ON L5N 5S3

Technical Service Hotline: 1-800-225-6119

Description

DensDeck® Prime Roof Board has been enhanced to provide a broader compatibility and higher performance with roofing adhesives. Face mat enhancements allow adhesives to be applied more uniformly and consistently. In adhered, single ply membrane testing, enhanced DensDeck Prime demonstrated an average of 24% better bond than the original products, when using solvent based adhesives. (Average based on 60 sq.ft./gal coverage rates.)* Choose DensDeck Prime Roof Boards for adhered and self-adhered "peel & stick" roofing systems, as well as hot mopped, cold mastic and torch-applied modified bitumen roofs. Enhanced DensDeck Prime Roof Boards create a stronger and more economical installation by reducing the amounts of mastic or adhesive used and potentially eliminates the field primer. Consult with membrane manufacturer for actual priming requirements.

DensDeck Prime Roof Boards are the first and only fiberglass mat gypsum roof boards with a 90-day weather exposure limited warranty when applied vertically on a parapet wall.** (Limited to 1/2″ and 5/8″ products only.)

Primary Uses

Roof system manufacturers and designers have found DensDeck Prime Roof Board to be compatible with many types of roofing systems, including: modified asphalt, single-ply, metal systems, recover board, as well as an overlayment for polyisocyanurate and polystyrene insulation. DensDeck Prime Roof Board can also be used as a form board for poured gypsum concrete deck in roof applications as well as a substrate for spray foam roofing systems. 1/2″ (12.7 mm) and 5/8″ (15.9 mm) DensDeck Prime Roof Board may also be used in vertical applications as a backer board or liner for the roof side of parapet walls.

DensDeck Prime Roof Board may allow the bonding of cold mastic modified bitumen and torching directly to the surface. *Consult with the system manufacturer for recommendations on this application.*

DensDeck Prime Roof Board is the preferred substrate for vapor retarders.

Standards and Code Approvals

DensDeck Prime Roof Boards are manufactured to meet ASTM C1177 and have the following approvals:

- Florida Product Approved
- Miami-Dade County Product Control Approved

Recommendations and Limitations

DensDeck Prime Roof Boards are manufactured to act with a properly designed roof system following good roofing practices. The actual use of DensDeck Prime Roof Board as a roofing component in any system or assembly is the responsibility of the roofing system's design authority. Consult with the appropriate system manufacturer and/or design authority for system and assembly specifications and instructions on applying other products to DensDeck Prime Roof Board. Georgia-Pacific does not warrant and is not responsible for any systems or assemblies utilizing DensDeck Prime Roof Board or any component in such systems or assemblies other than DensDeck Prime Roof Board.

The need for a separator sheet between the DensDeck Prime Roof Board and the roofing membrane must be determined by the roof membrane manufacturer or roofing system designer.

* Testing was done in accordance with FM approvals 4470, Appendix C: Small Scale Tests, Membrane Delamination Tests for Roofing Membranes and Substrates Using Tensile Loading.

** For complete warranty details, visit www.DensDeck.com. (Limited to 1/2″ and 5/8″ products only.)

Confirm any priming requirements with the membrane manufacturer. When applying solvent-based adhesives or primers, allow sufficient time for the solvent to flash off to avoid damage to roofing components.

DensDeck Prime Roof Boards should not be subjected to abnormal or excessive loads or foot traffic, such as, but not limited to, use on plaza decks or under steel-wheeled equipment that may fracture or damage the panels. Provide suitable roofing system protection when required.

When using DensDeck Prime Roof Boards for hot-mopped applications, Georgia-Pacific recommends maximum asphalt application temperatures for Type III asphalt of 425°F (218°C) to 450°F (232°C). Application temperatures above these recommended temperatures may adversely affect roof system performance. For application temperatures in excess of 450°F (232°C) and for mopping of type IV asphalt, ribbon or spot mopping or the installation of a perforated base sheet are recommended methods of bonding asphalt in lieu of full mopping. Consult and follow the roofing system manufacturer's specifications for full mopping applications and temperature requirements.

When using DensDeck Prime Roof Board as a substrate for torch applications, ensure that the product is dry and that the proper torching technique is used. Limit the heat to the DensDeck Prime Roof Board. Maintain a majority of the torch flame directly on the roll.

Conditions beyond the control of Georgia-Pacific, such as weather conditions, dew, leaks, application temperatures and techniques may cause adverse effects with roofing systems.

Handling and Use–CAUTION

This product contains fiberglass facings which may cause skin irritation. Dust and fibers produced during the handling and installation of the product may cause skin, eye and respiratory tract irritation. Avoid breathing dust and minimize contact with skin and eyes. Wear long sleeve shirts, long pants and eye protection. Always maintain adequate ventilation. Use a dust mask or NIOSH/MSHA approved respirator as appropriate in dusty or poorly ventilated areas.

Moisture Management

DensDeck Prime Roof Boards, like other components used in roofing systems, must be protected from exposure to moisture before, during and after installation.

Remove the plastic packaging from all DensDeck Prime Roof Board immediately upon receipt of delivery. Failure to remove the plastic packaging may result in entrapment of condensation or moisture. DensDeck Prime Roof Board stored outside must be stored level and off the ground and protected by a breathable waterproof covering. Provide means for air circulation around and under stored bundles of DensDeck Prime Roof Board. DensDeck Prime Roof Board must be covered the same day as installed.

Avoid application of DensDeck Prime Roof Boards during rain, heavy fog and any other conditions that may deposit moisture on the surface, and avoid the overuse of non-vented, direct-fired heaters during winter months. When roofing systems are installed on new poured concrete or light weight concrete decks or when re-roofing over an existing concrete deck, a vapor barrier should be installed above the concrete to retard the migration of water from the concrete into the roof assembly. Always consult the roofing system manufacturer or design authority for specific instructions for applying other products to DensDeck Prime Roof Boards.

Moisture vapor movement by convection must be eliminated, and the flow of water by gravity through imperfections in the roof system must be controlled. After a leak has occurred, no condensation on the upper surface of the system should be tolerated, and the water introduced by the leak must be dissipated to the building interior in a minimum amount of time.

Although DensDeck Prime Roof Boards are engineered with fiberglass facings and high density gypsum cores, the presence of free moisture can have a detrimental

continued →

Submittal Approvals

Job Name _____

Contractor _____

Date _____

Stamps / Signatures

effect on the performance of the product and the installation of roofing membranes. For example, hot asphalt applications can blister; torched modified bitumen may not properly bond; and adhesives for single ply membranes may not dry properly. Moisture accumulation may also significantly decrease wind uplift and vertical pull resistance in the system or assembly. DensDeck® Prime Roof Boards containing excessive free moisture content may need to be evaluated for structural stability to assure wind uplift performance.

Fire Resistance Classifications

DensDeck Prime Roof Boards are excellent fire barriers over combustible and noncombustible roof decks, including steel decks.

UL 790 Classification. DensDeck Prime Roof Boards have been classified by Underwriters Laboratories LLC (UL) for use as a fire barrier over combustible and noncombustible decks in accordance with the ANSI/UL 790 test standard. The UL classification includes a comprehensive Class A, B or C rating. For additional information concerning the UL 790 classification, consult the UL Certification Directory.

UL 1256 Classification. DensDeck Prime Roof Boards have also been classified by UL in roof deck constructions for internal (under deck) fire exposure in accordance with the ANSI/UL 1256 Steiner Tunnel test. For additional information concerning the UL 1256 classification, consult the UL Certification Directory.

FM Class 1 Approvals. DensDeck Prime Roof Boards are included in numerous roofing assemblies with a Factory Mutual (FM) Class 1 fire rating. 1/4″ (6.4 mm) DensDeck Prime Roof Boards have passed testing under the FM Calorimeter Standard 4450 and have been approved by FM as such for insulated steel deck roofs when installed according to the conditions identified by FM. For more information concerning FM Approvals and FM Class 1 assemblies with DensDeck Prime Roof Boards, consult FM or RoofNav®.

Type X. 5/8″ (15.9 mm) DensDeck® Prime Fireguard® Roof Boards are manufactured to meet the "Type X" requirements of ASTM C1177 for increased fire resistance beyond regular gypsum board.

UL Fire Resistance Ratings. 5/8″ (15.9 mm) DensDeck Prime Fireguard Roof Boards are designated as **Type DD** by UL and included in assembly designs investigated by UL for hourly fire resistance ratings. 5/8″ (15.9 mm) DensDeck Prime Fireguard Roof Boards may also replace any unclassified 5/8″ (15.9 mm) gypsum board in an assembly in the UL Fire Resistance Directory under the prefix "P".

Flame Spread and Smoke Developed. When tested in accordance with ASTM E84, DensDeck Prime Roof Boards had Flame Spread 0, Smoke Developed 0.

Wind Uplift

DensDeck Prime Roof Boards are included in numerous assemblies evaluated by FM or other independent laboratories for wind uplift performance. For information concerning such assemblies, please visit www.roofnav.com.

Physical Properties

Properties	1/4″ (6.4 mm)	1/2″ (12.7mm)	5/8″ (15.9 mm)
Thickness, nominal	1/4″ (6.4 mm) ± 1/16″ (1.6 mm)	1/2″ (12.7 mm) ± 1/32″ (.8 mm)	5/8″ (15.9 mm) ± 1/32″ (.8 mm)
Width, standard	4′ (1219 mm) ± 1/8″ (3 mm)	4′ (1219 mm) ± 1/8″ (3 mm)	4′ (1219 mm) ± 1/8″ (3 mm)
Length, standard	4′ (1219 mm) and 8′ (2438 mm) ± 1/4″ (6.4 mm)	4′ (1219 mm) and 8′ (2438 mm) ± 1/4″ (6.4 mm)	4′ (1219 mm) and 8′ (2438 mm) ± 1/4″ (6.4 mm)
Weight, nominal, lbs./sq. ft. (Kg/m^2)	1.2 (5.9)	2.0 (9.8)	2.5 (12.2)
Surfacing	Fiberglass mat with non-asphaltic coating	Fiberglass mat with non-asphaltic coating	Fiberglass mat with non-asphaltic coating
Flexural Strength[1], parallel, lbf. min. (N)	≥40 (178)	≥80 (356)	≥100 (444)
Flute Spanability[2]	2-5/8″ (66.7 mm)	5″ (127 mm)	8″ (203 mm)
Permeance[3], Perms (ng/Pa•S•m^2)	>30 (>1710)	>23 (>1300)	>17 (>970)
R Value[4], ft^2•°F•hr/BTU (m^2•K/W)	.28	.56	.67
Linear Variation with Change in Temp., in/in °F (mm/mm/C°)	8.5 x 10^{-6} (15.3 x 10^{-6})	8.5 x 10^{-6} (15.3 x 10^{-6})	8.5 x 10^{-6} (15.3 x 10^{-6})
Linear Variation with Change in Moisture	6.25 x 10^{-6}	6.25 x 10^{-6}	6.25 x 10^{-6}
Water Absorption[5], % max	<10	<10	<10
Compressive Strength[6], psi nominal	900	900	900
Surface Water Absorption, grams, nominal	<2.0	<2.0	<2.0
Flame Spread, Smoke Developed (ASTM E84)	0/0	0/0	0/0
Bending Radius	4′ (1219 mm)	6′ (1829 mm)	8′ (2438 mm)

1. Tested in accordance with ASTM C473 method B.
2. Tested in accordance with ASTM E661.
3. Tested in accordance with ASTM E96 (dry cup method).
4. Tested in accordance with ASTM C518 (heat flow meter).
5. Specified values per ASTM C1177.
6. Tested in accordance with ASTM C473.

Georgia-Pacific Gypsum

U.S.A. Georgia-Pacific Gypsum LLC
Georgia-Pacific Gypsum II LLC
Canada Georgia-Pacific Canada LP

SALES INFORMATION AND ORDER PLACEMENT

U.S.A. West: **1-800-824-7503**
Midwest: **1-800-876-4746**
South Central: **1-800-231-6060**
Southeast: **1-800-327-2344**
Northeast: **1-800-947-4497**

CANADA Canada Toll Free: **1-800-387-6823**
Quebec Toll Free: **1-800-361-0486**

TECHNICAL INFORMATION
U.S.A. and Canada: **1-800-225-6119,** www.gpgypsum.com

TRADEMARKS DENSDECK, FIREGUARD and the GEORGIA-PACIFIC logo are trademarks owned by or licensed to Georgia-Pacific Gypsum LLC. ROOFNAV is a registered mark of FM Global.

WARRANTIES, REMEDIES AND TERMS OF SALE For current warranty information for this product, please go to www.gpgypsum.com and select the product for warranty information. All sales of this product by Georgia-Pacific are subject to our Terms of Sale available at www.gpgypsum.com.

UPDATES AND CURRENT INFORMATION The information in this document may change without notice. Visit our website at www.gpgypsum.com for updates and current information.

CAUTION For product fire, safety and use information, go to www.buildgp.com/safetyinfo or call 1-800-225-6119.

FIRE SAFETY CAUTION Passing a fire test in a controlled laboratory setting and/or certifying or labeling a product as having a one-hour, two-hour, or any other fire resistance or protection rating and, therefore, as acceptable for use in certain fire rated assemblies/systems, does not mean that either a particular assembly/system incorporating the product, or any given piece of the product itself, will necessarily provide one-hour fire resistance, two-hour fire resistance, or any other specified fire resistance or protection in an actual fire. In the event of an actual fire, you should immediately take any and all actions necessary for your safety and the safety of others without regard for any fire rating of any product or assembly/system.

Submittal Sheet

USG Securock® Brand Gypsum-Fiber Roof Board

High-performance gypsum-fiber roof board for use in low-slope commercial roofing systems

- Exceptional bond and low absorption in adhered systems
- Moisture and mold resistant
- Excellent wind-uplift performance
- Manufactured from 97% recycled material

Description

USG Securock® Gypsum-Fiber Roof Board is a high-performance roof board for use in low-slope roofing systems. Its unique, fiber-reinforced, homogenous composition gives the panel strength and water resistance through to the core. USG Securock Gypsum-Fiber Roof Board provides exceptional bond and low absorption in adhered systems and with its homogenous composition achieves high wind-uplift ratings with no risk of facer delamination. Made from 97% recycled material, USG Securock Gypsum-Fiber Roof Board combines superior performance with sustainable design for all types of roofing systems including single-ply, fluid-applied, built-up, spray foam, metal and modified bitumen roofing.

Advantages

Exceptional Strength Engineered to provide superior wind-uplift performance for a wide variety of roof assemblies. USG Securock Gypsum-Fiber Roof Board has uniform composition providing enhanced bond strength of membrane systems with no risk of facer delamination.

Fire Performance Provides excellent fire performance and demonstrates exceptional surface burning characteristics (ASTM E84 (CAN/ULC-S102) Flame Spread 5, Smoke Developed 0).

Moisture and Mold Uniform water-resistant core ensures excellent moisture and mold resistance. Scored a maximum "10" for mold resistance on ASTM D3273.

Versatile Can be used as a component in single-ply, fluid-applied, built-up, spray foam, metal and modified bitumen roofing.

Sustainability Made from 97% recycled materials and has earned independent certification from Scientific Certification Systems for this achievement.

Limitations

- USG Securock Gypsum-Fiber Roof Board is engineered to perform within a properly designed roof system. The use of USG Securock Gypsum-Fiber Roof Board as a roofing component is the responsibility of the design professional.
- Consult roofing manufacturers for specific instructions on the application of their products to USG Securock Gypsum-Fiber Roof Board
- Weather conditions, dew, application temperature, installation techniques and moisture drive can have adverse effects on the performance of the roof system and are beyond the control of USG.
- Keep USG Securock Gypsum-Fiber Roof Board panels dry before, during and after installation. USG Securock Gypsum-Fiber Roof Board should not be installed during rains, heavy fogs and any other conditions that deposit moisture on the surface of the board. Apply only as much USG Securock Gypsum-Fiber Roof Board that can be covered by final roof membrane system in the same day. Avoid exposure to moisture from leaks or condensation.
- For re-roof or re-cover applications, existing roofing system must be dry throughout prior to application of USG Securock Gypsum-Fiber Roof Board.
- Plastic or poly packaging applied at the plant to protect board during rail or other transit should be removed upon receipt to prevent condensation or trapping of moisture, which may cause application problems.
- USG Securock Gypsum-Fiber Roof Board should be stored flat and off the ground with protection from the weather. If stored outdoors, a breathable waterproof covering should be used.
- When applying solvent-based adhesives or primers, allow sufficient time for the solvent to evaporate to avoid damage to roofing components.
- USG allows the bonding of cold mastic modified bitumen and torching directly to the surface. Consult with the system manufacturer for recommendations on this application.
- USG recommends maximum asphalt application temperature for Type III asphalt of 455 °F when using USG Securock Gypsum-Fiber Roof Board. Application temperatures above these recommended temperatures may adversely affect roof system performance.

Installation

- Refer to roof system manufacturer's written instructions, local code requirements and Factory Mutual Global (FMG) and/or Underwriters Laboratories (UL) requirements for proper installation techniques.
- Use fasteners specified in accordance with above requirements. Install approved fasteners with plates into the USG Securock Gypsum-Fiber Roof Board, flush with the surface. Fasteners should be installed in strict compliance with the roof system manufacturer's installation recommendations and FMG Loss Prevention Data Sheet 1-29. Proper fastener spacing is essential to achieve wind-uplift performance.

USG

– Locate edge joints on, and parallel to, deck ribs. Stagger end joints of adjacent lengths of USG Securock Gypsum-Fiber Roof Board. Butt board edges and ends loosely in typical installations.
– Butt board edges and ends loosely (minimum 1/16" gap on all edges) in typical installations. This gap may need to be larger depending on factors like the roof deck's size, membrane color, ultimate deck surface temperature and time of year the roof assembly is installed. Installations during temperatures below 50°F may require larger spacing. Please refer to USG's published physical properties below to calculate the actual gap needed for your specific project for all thicknesses.
– Roof boards should never be installed frozen.
– See product data table below for maximum flute span when panels are applied directly over metal decking.
– For vertical parapet applications, only 1/2" or 5/8" panels should be used. Maximum framing spacing is 24" o.c.

Fire Performance

– UL Classified as to Surface Burning Characteristics and Non-Combustability in accordance with ASTM E84 (CAN/ULC-S102)
  – Flame Spread 5 and Smoke Developed 0
– 1/4", 3/8", 1/2" and 5/8" Thickness — Class A in accordance with UL790 (CAN/ULC-S107). See the UL Building Materials Directory for more information.
– 5/8" Thickness — Meets requirements of Type X per ASTM C1278 and may be used in P series designs as a thermal barrier.

System Performance

– FM Approved
  – Complies with requirements of FM 4450 and FM 4470
  – Meets FM Class 1

Standards Compliance

USG Securock Gypsum-Fiber Roof Board is manufactured to conform to ASTM C1278, "Standard Specification for Fiber-Reinforced Gypsum Panel."

Physical Properties

	USG Securock Gypsum-Fiber Roof Board			
	1/4" (6.6 mm)	**3/8" (9.5 mm)**	**1/2" (12.7 mm)**	**5/8" (15.9 mm)**
Width, standard	4' (1220 mm)	4' (1220 mm)	4' (1220 mm)	4' (1220 mm)
Length, standard	4' (1220 mm) and 8' (2440 mm)	4' (1220 mm) and 8' (2440 mm)	4' (1220 mm) and 8' (2440 mm)	4' (1220 mm) and 8' (2440 mm)
Pieces per unit for 4' x 8' sheets	50	40	30	24
Weight, nominal lbs./unit, 4' x 8' sheet	2,575	2,575	2,725	2,525
Weight, nominal lbs./sq. ft.	1.57	1.96	2.76	3.20
Flexural strength, parallel, lbs. min., per ASTM C 473	40	70	110	161
Compressive strength, psi nominal	1800	1800	1800	1800
Flute spannability per ASTM E 661	2-5/8"	5"	8"	10"
Permeance, perms, per ASTM E 96	30	26	26	24
R Value per ASTM C 518	0.2	0.3	0.5	0.6
Coefficient of thermal expansion, inches/inch • °F, per ASTM E 831	8.0×10^{-6}	8.0×10^{-6}	8.0×10^{-6}	8.0×10^{-6}
Linear variation with change in moisture, inches/inch • %RH, per ASTM D 1037	8.0×10^{-6}	8.0×10^{-6}	8.0×10^{-6}	8.0×10^{-6}
Water absorption, % max, per ASTM C 473	10	10	10	10
Surface water absorption, nominal grams, per ASTM C 473	1.6	1.6	1.6	1.6
Mold resistance per ASTM D 3273*	10	10	10	10
Bending Radius	25'	25'	25'	30'

***ASTMD3273 Mold Resistance Testing** - In independent lab tests conducted on USG Securock Gypsum-Fiber Roof Board and USG Securock Glass-Mat Roof Board at the time of manufacture per ASTM D3273 Standard Test Method for Resistance to Growth of Mold on the Surface of Interior Coatings in an Environmental Chamber, both panels scored a 10. The ASTM lab test may not accurately represent the mold performance of building materials in actual use. Given unsuitable project conditions during storage, installation or after completion, any building material can be overwhelmed by mold. To manage the growth of mold, the best and most cost-effective strategy is to protect building products from water exposure during storage and installation and after completion of the building. This can be accomplished by using good design and construction practices.

Submittal Approvals:

Job Name	
Contractor	**Date**

Product Information
See usg.com for the most up-to-date product information.

Note
Products described here may not be available in all geographic markets. Consult your U.S. Gypsum Company sales office or representative for information.

Notice
We shall not be liable for incidental or consequential damages, directly or indirectly sustained, nor for any loss caused by application of these goods not in accordance with current printed instructions or for other than their intended use. Our liability is expressly limited to replacement of defective goods. Any claim shall be deemed waived unless made in writing to us within thirty (30) days from the date it was or reasonably should have been discovered.

Safety First!
Follow good safety and industrial hygiene practices during handling and installation of all products and systems. Take necessary precautions and wear the appropriate personal protective equipment as needed. Read material safety data sheets and related literature on products before specification and/or installation.

Manufactured by
United States Gypsum Company
550 West Adams Street
Chicago, IL 60661

800 USG.4YOU (874.4968)
usg.com

RF5/rev. 10-13

Mule-Hide Products Co., Inc.
1195 Prince Hall Dr.
Beloit, WI 53511

PRODUCT DATA SHEET
PDS 09-6320
Revision Date: Jan-2014

MULE-HIDE TPO COATED METAL

PRODUCT DESCRIPTION

Mule-Hide TPO Coated Metal is a 24-gauge galvanized steel sheet that is coated with a layer of 0.035" non-reinforced TPO flashing.

BASIC USES

TPO Coated Metal is cut into the appropriate width and used to fabricate metal drip edges or other roof perimeter edging profiles. TPO membrane may be welded directly to the coated metal edging, eliminating the need to strip in the metal with a separate piece of membrane.

TYPICAL PHYSICAL PROPERTIES

Typical Properties and Characteristics	
Sheet Size	4' x 10' (1.2m by 3.0 m)
Weight	1.1 lb/ft^2 (5.4 kg/m^2)
Color	White, Gray & Tan
Flashing Thickness	.035" (0.9 mm) nominal
Steel Thickness	.024" (0.6 mm) nominal (24 ga)
Steel Type	Hot Dipped Galvanized – G90 Conforms to ASTM A653
Packaging	10 or 25 sheets per pallet
Typical properties and characteristics are based on samples tested and are not guaranteed for all samples of this product. This data and information is intended as a guide and does not reflect the specification or specification range for any particular property of this product.	

LEED Information	
Pre-consumer Recycled Content	0%
Post-consumer Recycled Content	0%
Manufacturing Location	Franklin Park, IL
Solar Reflectance Index (SRI)	N/A

BENEFITS & SUPPLEMENTAL STATEMENTS

- Allows direct welding of TPO membrane to metal
- Easy to cut and form for creating a variety of edge sizes and shapes

INSTALLATION INSTRUCTIONS

1. Install TPO coated metal with ⅛" to ¼" (3 to 6 mm) wide joints between adjoining sections.
2. Install 2" wide (5 cm) duct tape over joints in TPO metal (to act as a bond breaker).
3. Heat-weld 6" wide (15.5 cm) strip of TPO non-reinforced flashing membrane over joint.
4. Position TPO reinforced membrane and heat-weld to TPO clad metal achieving a min 1 ½" wide weld.
   Review Mule-Hide specifications and details for complete installation information.

STORAGE & HANDLING

Store coated metal in a cool, shaded area and cover with light-colored, breathable, waterproof tarpaulins.

PRECAUTIONS

TPO Coated Metal that has been exposed to the weather must be prepared with Weathered Membrane Cleaner prior to hot-air welding.

MULE-HIDE TPO COATED METAL

PROTECTION & SAFETY

Mule-Hide maintains Material Safety Data Sheets on all of its products. Material Safety Data Sheets contain health and safety information for your development of appropriate product handling procedures to protect your employees and customers. Mule-Hide's Material Safety Data Sheets should be read and understood by all of your supervisory personnel and employees before using Mule-Hide products in your facilities.

ADDITIONAL INFORMATION

The information given on this PDS is subject to change without notice. Always check the Mule-Hide website at www.mulehide.com for the latest information, changes and updates or contact Mule-Hide Products Company at 800-786-1492.

DISCLAIMER

The statements provided concerning the material shown are intended as a guide for material usage and are believed to be true and accurate at the time of printing. No statement made by anyone may supersede this information, except when done in writing by Mule-Hide Products Co., Inc. Since the manner of use is beyond our control, Mule-Hide does not authorize anyone to make any warranty of merchantability or fitness for any particular purpose or any other warranty, guarantee or representation, expressed or implied, concerning this material. This product may be eligible for a Mule-Hide warranty, please check the Mule-Hide website at www.mulehide.com or contact Mule-Hide directly at 800-786-1492 for details. Buyer and user accept the product under these conditions and assume the risk of any failure, any injury person or property (including that of the user), loss or liability resulting from the handling, storage or use of the product whether or not it is handled, stored or used in accordance with the directions or specifications. Mule-Hide must be notified in writing of any claims and be given the opportunity to inspect the alleged failure before repairs are made.

Mule-Hide Products Co., Inc.
1195 Prince Hall Dr.
Beloit, WI 53511

PRODUCT DATA SHEET
PDS 09-6405
Revision Date: Oct-2013

MULE-HIDE TPO WALKWAY ROLLS

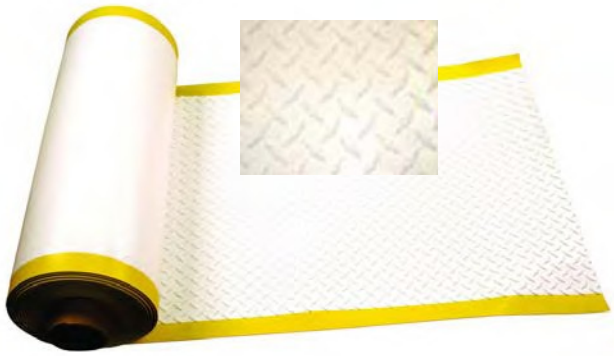

PRODUCT DESCRIPTION

Mule-Hide TPO Walkway Rolls incorporate an aggressive, non-slip, diamond plate tread pattern of polyester reinforced TPO material that offers excellent tear and puncture resistance. Walkway Rolls are trimmed in safety yellow along the length of the sheet to better define the walkway area. The yellow edges are smooth without safety lugs to allow for easier welding.

BASIC USES

The Mule-Hide TPO Walkway Roll is designed to protect the TPO membrane in those areas exposed to repetitive foot traffic and other hazards. Mule-Hide specifications require the use of such a product in walkway concentration points (i.e., roof hatches, access doors, rooftop ladders, etc.) regardless of traffic frequency. Walkways must also be installed if regular maintenance (once a month or more) is necessary to service rooftop equipment.

SPECIFICATIONS

Property	Test Method	Typical Properties
Surface Texture:	N/A	Diamond Plate traction surface
Material:	N/A	Polyester reinforced TPO material
Sizes:	N/A	34" x 50' (76cm X 15.2m)
Weight:	N/A	88 lbs per roll
Thickness:	ASTM D412	180-mil overall (4.50 mm) 80-mil (2.25 mm) bottom of tread 80-mil (2.25 mm)yellow welding edge
Tensile Strength:	ASTM D638	600 psi (4.1 MPa)
Tear Strength:	ASTM D624	100 lbf/in (17.5 kN/m)
Typical properties and characteristics are based on samples tested and are not guaranteed for all samples of this product. This data and information is intended as a guide and does not reflect the specification range for any particular property of this material		

COLORS

White, Gray and Tan

PACKAGING

- Each roll is individually bagged.
- Nine rolls per skid.
- Store rolls in a clean, cool, dry location.

BENEFITS & SUPPLEMENTAL STATEMENTS

- Walkway edges are trimmed in safety yellow to better define the designated traffic flow
- Increased slip resistance with aggressive diamond plate tread design
- Superior weathering package for long term performance
- Yellow edges are smooth without tread to facilitate welding
- Standard colors are White, Gray and Tan. Special colors are available (minimum quantities apply)

MULE-HIDE TPO WALKWAY ROLLS

INSTALLATION INSTRUCTIONS

SURFACE PREPARATION

1. If membrane or walkway roll has been exposed for over 7 days, use Weathered Membrane Cleaner and a Scotch-Brite Pad to prepare the area to be welded to the walkway material. Allow membrane cleaner to dry completely.

APPLICATION

1. Position the walkway in desired location. Cut walkway rolls into maximum 10 (ten) foot lengths and position with a minimum 1-inch gap between adjacent pieces to allow for water drainage. Cut the walkway roll to allow for a minimum 4-inch gap over any field splice. (Since the attachment of the walkway roll is permanent, this will allow access to the field seams for future repairs).

2. Using an automated welder, weld all four sides of the walkway material to the membrane. (Welding temperature and speed is typically the same as used for the roofing membrane) A hand welder may be used but productivity will be reduced.

PRECAUTIONS

1. Walkway rolls are a maintenance item and are not covered under the roofing warranty.

2. This product is intended to be utilized as a walkway only and is not designed as a perimeter warning line or substitution for ballast. Walkway rolls cannot be positioned within 10-feet of the roof perimeter.

3. Allowing walkway to relax and warm up in the sun light will facilitate installation.

PROTECTION & SAFETY

Mule-Hide maintains Material Safety Data Sheets on all of its products. Material Safety Data Sheets contain health and safety information for your development of appropriate product handling procedures to protect your employees and customers. Mule-Hide's Material Safety Data Sheets should be read and understood by all of your supervisory personnel and employees before using Mule-Hide products in your facilities.

ADDITIONAL INFORMATION

The information given on this PDS is subject to change without notice. Always check the Mule-Hide website at www.mulehide.com for the latest information, changes and updates or contact Mule-Hide Products Company at 800-786-1492.

DISCLAIMER

Mule-Hide Products Co., Inc.
1195 Prince Hall Dr.
Beloit, WI 53511

PRODUCT DATA SHEET
PDS 09-6450
Revision Date: Feb 2014

MULE-HIDE RUBBER PAVER BLOCKS

PRODUCT DESCRIPTION

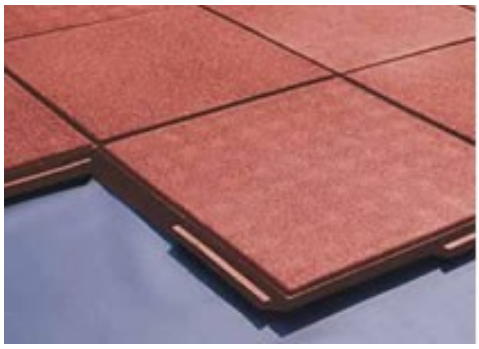

Mule-Hide Rubber Paver Blocks are an environmentally friendly product that provides superior protection to the underlying membrane. These Rubber Paver Blocks feature a resilient, shock-absorbing, weather-resistant traffic surface. Pavers lock together to provide multi-directional drainage patterns eliminating the need for protective mats. The pavers consist of 90% post-consumer recycled content, providing an environmentally friendly product.

BASIC USES

Used as a paver system for all Mule-Hide Membranes.

TYPICAL PHYSICAL PROPERTIES

Property	Test Method	Typical Characteristics
Dimensions @ 78ºF (26ºC)	N/A	24” x 24” ± ¼”
Weight	N/A	6 lbs per square foot
Water Surface Density	ASTM D3676	66 lbs per cubic foot
Coefficient of Thermal Expansion	N/A	1.10×10^{-3} in. / ft. / ºF
Tensile Strength	ASTM D412	107 psi
Elongation at Break	ASTM D412	165%
Tear Resistance	ASTM D624	33 lbs / in.
Abrasion Testing, Taber Abrader 1000 g. wt., 2000 cycles, H-21 wheel	ASTM D3389	0.75 g. loss
Resistance to Outdoor Ultraviolet Weathering	Xenon Arc, 500 hrs. exposure, 178ºF (81ºC), 50% relative humidity	85% tensile retention 100% elongation retention
Burning Pill Test	ASTM D2859	Pass
Freeze / Thaw Cycling	ASTM C67	No Deterioration
Typical properties and characteristics are based on samples tested and are not guaranteed for all samples of this product. This data and information is intended as a guide and does not reflect the specification range for any particular property of this product.		

COLORS

Available in BLACK and TERRA COTTA

INSTALLATION INSTRUCTIONS

Mule-Hide Rubber Paver Blocks are installed over a completed roofing membrane. The pavers are loose laid and interlocked, offering superior protection to the membrane while still maintaining accessibility to the membrane. This system can be used over a variety of roofing systems and is ideal for those roofs that are prone to heavy maintenance traffic. The Mule-Hide Rubber Paver Blocks are not recommended for use in areas that are subject to small, narrow point loading, such as chairs with narrow legs or high heeled shoes.

PROTECTION & SAFETY

Mule-Hide maintains Material Safety Data Sheets on all of its products. Material Safety Data Sheets contain health and safety information for your development of appropriate product handling procedures to protect your employees and customers. Mule-Hide's Material Safety Data Sheets should be read and understood by all of your supervisory personnel and employees before using Mule-Hide products in your facilities.

MULE-HIDE RUBBER PAVER BLOCKS

ADDITIONAL INFORMATION

The information given on this PDS is subject to change without notice. Always check the Mule-Hide website at www.mulehide.com for the latest information, changes and updates or contact Mule-Hide Products Company at 800-786-1492.

DISCLAIMER

The statements provided concerning the material shown are intended as a guide for material usage and are believed to be true and accurate at the time of printing. No statement made by anyone may supersede this information, except when done in writing by Mule-Hide Products Co., Inc. Since the manner of use is beyond our control, Mule-Hide does not authorize anyone to make any warranty of merchantability or fitness for any particular purpose or any other warranty, guarantee or representation, expressed or implied, concerning this material. This product may be eligible for a Mule-Hide warranty, please check the Mule-Hide website at www.mulehide.com or contact Mule-Hide directly at 800-786-1492 for details. Buyer and user accept the product under these conditions and assume the risk of any failure, any injury person or property (including that of the user), loss or liability resulting from the handling, storage or use of the product whether or not it is handled, stored or used in accordance with the directions or specifications. Mule-Hide must be notified in writing of any claims and be given the opportunity to inspect the alleged failure before repairs are made.

Mule-Hide Products Co., Inc.
1195 Prince Hall Dr.
Beloit, WI 53511

MULE-HIDE YELLOW WARNING STRIP

PRODUCT DESCRIPTION

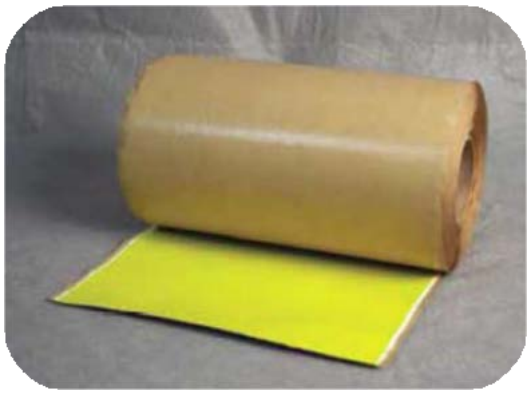

Mule-Hide Yellow Warning Strip is a Bright Yellow colored, nominal 30-mil (0.76mm) thick non-reinforced TPO membrane laminated to a nominal 30-mil (0.76mm) thick, fully cured synthetic rubber pressure-sensitive adhesive. Yellow Warning Strip is available in 12-inch (305-mm) wide by 100-foot (30 m) long rolls.

BASIC USES

Yellow Warning Strip is intended for use on EPDM, TPO, or Hypalon roofing systems to provide a visual warning of an impending hazard (i.e. roof edge, deep drain sump, skylight, etc.) Meant to be beneficial when maintenance personnel are frequently on the roof. **Yellow Warning Strip cannot be used for flashings or as a coverstrip.**

TYPICAL PROPERTIES AND CHARACTERISTICS

Typical Properties and Characteristics	
Tensile Strength, ASTM D412	2,500 psi (17.2 MPa) minimum 2,900 psi (20.0 MPa) typical
Elongation, ASTM D412	600% minimum 750% typical
Hardness, ASTM D2240	Typical 80, Shore A
Color	YELLOW
Base	Membrane - Non-reinforced TPO Adhesive - Synthetic Rubber
Solids	100%
Nominal Thickness	0.060" (1.52mm)
Nominal Width	Membrane - 12" (300mm)
Nominal Length	100 ft. (30.5 m)
Net Weight per Roll	44 lbs (10kg)
Packaging	One Roll/Carton
Shelf Life	1 Year
Typical properties and characteristics are based on samples tested and are not guaranteed for all samples of this product. This data and information is intended as a guide and does not reflect the specification or specification range for any particular property of this product.	

LEED Information

LEED Information	
Pre-consumer Recycled Content	0%
Post-consumer Recycled Content	0%
Manufacturing Location	Eugene, OR
Solar Reflectance Index (SRI)	N/A

MULE-HIDE YELLOW WARNING STRIP

INSTALLATION INSTRUCTIONS

1. Clean the existing membrane with Weathered Membrane Cleaner and natural fiber rags. A Scotch-Brite® Pad may be necessary to remove a heavy build-up of dirt. Pour a small amount of Weathered Membrane Cleaner over a primer pad and rub area to receive strip in a circular motion. Wipe away residual dirt with clean rags.
2. Using a clean Scotch-Brite® Pad, apply Tape Primer to the area of the membrane to be overlaid. The properly primed area will be uniform in color without streaks and free of globs or puddles.
3. The entire surface where the flashing will be applied must be clean. The adhesive on the back of the Yellow Warning Strip will not adhere to dusted/dirty surfaces. Any residual surface contamination will be detrimental to the bond strength of the adhesive.
4. Install Yellow Warning Strip immediately after the Tape Primer flashes off to minimize potential dust contamination and to promote adhesion in colder weather.
5. Peel off 10-12" (250-300 mm) of the protective release liner from the Yellow Warning Strip. Position the strip over the area to be overlaid and press down using firm, even hand pressure across the entire area. Continue this process until the full area to be overlaid is completed. (Cut-Edge Sealant is not required on edges of the Yellow Warning Strip).
6. Immediately roll the Yellow Warning Strip with a 2" (50-mm) wide neoprene roller using positive pressure. Roll across the Yellow Warning Strip edge, not parallel to it. **In areas where the Yellow Warning Strip crosses a metal joint, a membrane seam (T-joint) or at an end lap use a hot air gun to heat the top surface of the Yellow Warning Strip and crease the material into the step-off.** This process reduces the possibility of a water channel forming.
8. NOT FOR USE AS FLASHING OR AS A COVERSTRIP.
   Review Mule-Hide Specifications and Details for installation information.

PRECAUTIONS

1. Yellow Warning Strip cannot be used for flashing corners, pipes, T-joints, or butt joints on TPO Fleece BACK systems, or any angled metal flanges such as gravel stops or other canted metal edgings.
2. Avoid prolonged contact with skin. In case of contact with skin, thoroughly wash affected area with soap and water.
3. Due to solvent flash-off, condensation may form on freshly applied Tape Primer when the ambient temperature is near the dew point. If condensation develops, the application of Tape Primer and Yellow Warning Strip must be discontinued since proper adhesion will not be achieved.
4. Allow the surface to dry and apply a thin freshener coat of Tape Primer to the previously coated surface and apply Yellow Warning Strip when conditions allow.
5. Do not allow waste products (petroleum, grease, oil, solvents, vegetable or mineral oil, animal fats, etc.) or direct steam venting to come in contact with the Yellow Warning Strip.
6. KEEP OUT OF THE REACH OF CHILDREN.

STORAGE & HANDLING

1. Material should be stored in a clean, dry area and protected from extreme temperatures.
2. Prolonged job site storage temperatures in excess of 90°F (32°C) may affect product shelf life. In warm, sunny weather; keep Yellow Warning Strip rolls in their box or in a shaded area until ready to use.
3. Storage and use of Yellow Warning Strip at temperatures below 40°F (4°C) will result in a loss of adhesive tack, and in extreme cases, will result in no bond to the substrate.
4. Overnight storage must be available to keep the temperature of the Yellow Warning Strip at a minimum of 60ºF (15ºC). Hot boxes for job site storage must be provided to maintain a minimum product temperature of 40º8F (48ºC).

MULE-HIDE YELLOW WARNING STRIP

PROTECTION & SAFETY

Mule-Hide maintains Material Safety Data Sheets on all of its products. Material Safety Data Sheets contain health and safety information for your development of appropriate product handling procedures to protect your employees and customers. Mule-Hide's Material Safety Data Sheets should be read and understood by all of your supervisory personnel and employees before using Mule-Hide products in your facilities.

ADDITIONAL INFORMATION

The information given on this PDS is subject to change without notice. Always check the Mule-Hide website at www.mulehide.com for the latest information, changes and updates or contact Mule-Hide Products Company at 800-786-1492.

DISCLAIMER

The statements provided concerning the material shown are intended as a guide for material usage and are believed to be true and accurate at the time of printing. No statement made by anyone may supersede this information, except when done in writing by Mule-Hide Products Co., Inc. Since the manner of use is beyond our control, Mule-Hide does not authorize anyone to make any warranty of merchantability or fitness for any particular purpose or any other warranty, guarantee or representation, expressed or implied, concerning this material. This product may be eligible for a Mule-Hide warranty, please check the Mule-Hide website at www.mulehide.com or contact Mule-Hide directly at 800-786-1492 for details. Buyer and user accept the product under these conditions and assume the risk of any failure, any injury person or property (including that of the user), loss or liability resulting from the handling, storage or use of the product whether or not it is handled, stored or used in accordance with the directions or specifications. Mule-Hide must be notified in writing of any claims and be given the opportunity to inspect the alleged failure before repairs are made.

Mule-Hide Products Co., Inc.
1195 Prince Hall Dr.
Beloit, WI 53511

PRODUCT DATA SHEET
PDS 09-6505
Revision Date: 08/27/09

MULE-HIDE HP PROTECTIVE MAT

PRODUCT DESCRIPTION

A nominal 6.0-ounce per square yard (140 grams per square meter) UV resistant polypropylene needle punched fabric.

BASIC USES

Can be used above the membrane as a slipsheet for crushed stone or pavers or below the membrane as a minimum underlayment mat for Mule-Hide's Mechanically-Attached or Ballasted System applications. Consult current specifications for underlayment requirements.

TYPICAL PHYSICAL PROPERTIES

Description	ASTM Test Method	Average Roll Values
Tensile Strength (Grab)	D 4632	160 lbs. (68 Kg)
Burst Strength (Mullen)	D 3786	350 psi (2413 kPa)
Elongation (Ultimate)	D 4632	> 50%
Puncture Strength	D 4833	90 lbs. (41 Kg)
Trapezoidal Tear	D 4533	65 lbs. (30 Kg)
UV Resistance (500 Hr St. Ref)	D 4355	> 70%
Permeability Coefficient	D 4491	0.2 cm/sec
pH Resistance		2 - 13
Thickness		0.65 in (1.65 mm)

PACKAGING

Packaged in rolls 15' x 300' (4.6m x 92m)
Coverage: 4500 SF (405 SM)
Weight per Roll: 210 lbs (83Kg)
Roll Diameter: 18 in (460 mm)

INSTALLATION INSTRUCTIONS

Mechanically Attached Roofing Systems: Install Mule-Hide HP Protective Mat over the substrate with all edges overlapped a minimum of 3" (75 mm). HP Protective Mat must be fastened to the roof deck with a minimum of one insulation fastener and plate per every 4 square feet.

Ballasted Roofing Systems: When specified under Mule-Hide roofing membrane, position the Mule-Hide HP Protective Mat loosely over the substrate with all edges overlapped a minimum of 6" (150 mm). The roofing membrane must be positioned to completely cover the previously installed HP Protective Mat.

The HP Protection Mat can also be installed on top of the Mule-Hide roofing membrane as a protection layer, typically under pavers or crushed stone. After completing all of the membrane and flashing seams, loosely lay the Mule-Hide HP Protective Mat over the membrane with the side laps overlapped a minimum of 6" (150 mm) and end laps overlapped 12" (300 mm). Prior to placement of ballast, extend the HP Protective Mat a minimum of 2" (50 mm) above the anticipated ballast level at the perimeter and penetrations, except at roof drains and scuppers.

The fabric must extend to drain bases and scupper openings but must not cover or restrict flow to the drains. Additional matting must be installed around penetrations to prevent direct contact between crushed stone and flashing.

MULE-HIDE HP PROTECTIVE MAT

INSTALLATION INSTRUCTIONS (Continued)

Note: Following placement of the fabric, install ballast, temporary ballast, or spot adhere with bonding adhesive to prevent the movement or displacement of unballasted fabric.

PROTECTION & SAFETY

This product is not hazardous as defined in CFR 1910.1200.
Dust may be irritating to respiratory tract and eyes.
Material is flammable. Do not expose to flame.

Mule-Hide maintains Material Safety Data Sheets on all of its products. Material Safety Data Sheets contain health and safety information for your development of appropriate product handling procedures to protect your employees and customers. Mule-Hide's Material Safety Data Sheets should be read and understood by all of your supervisory personnel and employees before using Mule-Hide products in your facilities.

ADDITIONAL INFORMATION

The information given on this PDS is subject to change without notice. Always check the Mule-Hide website at www.mulehide.com for the latest information, changes and updates or contact Mule-Hide Products Company at 800-786-1492.

DISCLAIMER

The statements provided concerning the material shown are intended as a guide for material usage and are believed to be true and accurate at the time of printing. No statement made by anyone may supersede this information, except when done in writing by Mule-Hide Products Co., Inc. Since the manner of use is beyond our control, Mule-Hide does not authorize anyone to make any warranty of merchantability or fitness for any particular purpose or any other warranty, guarantee or representation, expressed or implied, concerning this material. This product may be eligible for a Mule-Hide warranty, please check the Mule-Hide website at www.mulehide.com or contact Mule-Hide directly at 800-786-1492 for details. Buyer and user accept the product under these conditions and assume the risk of any failure, any injury person or property (including that of the user), loss or liability resulting from the handling, storage or use of the product whether or not it is handled, stored or used in accordance with the directions or specifications. Mule-Hide must be notified in writing of any claims and be given the opportunity to inspect the alleged failure before repairs are made.