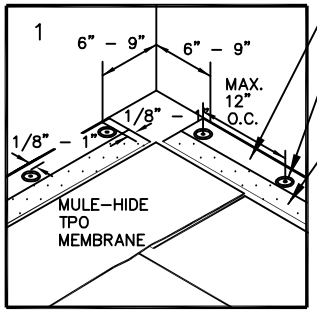

6" WIDE PRESSURE–SENSITIVE TPO RUSS STRIP

M–H 2.4" SEAM PLATE AND HDP OR EHD FASTENER MAX. 12" O.C.

PRE–APPLIED PRESSURE–SENSITIVE TAPE(RUSS STRIP)

INSTALL PRESSURE–SENSITIVE RUSS AND FASTEN TO ROOF DECK WITH APPROVED MULE–HIDE FASTENERS AND SEAM PLATES, MAX. 12" O.C.

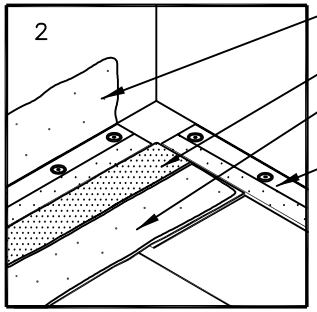

TPO BONDING ADHESIVE

TAPE PRIMER

TPO BONDING ADHESIVE

6" WIDE PRESSURE–SENSITIVE TPO RUSS STRIP

FOR RUSS SECUREMENT, USE HDP OR EHD FASTENERS & SEAM PLATES SPACED A MAXIMUM OF 12"O.C.

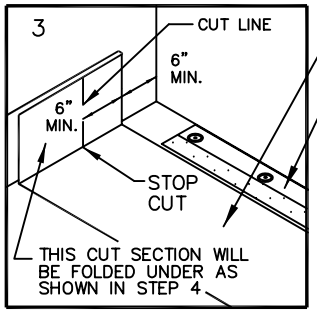

TPO REINFORCED MEMBRANE

6" WIDE PRESSURE–SENSITIVE TPO RUSS STRIP

THE CUT SECTION OF VERTICAL MEMBRANE WILL BE FOLDED UNDER THE FIELD MEMBRANE AS SHOWN IN STEP 4.

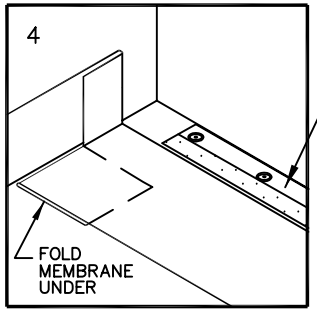

6" WIDE PRESSURE–SENSITIVE TPO RUSS STRIP

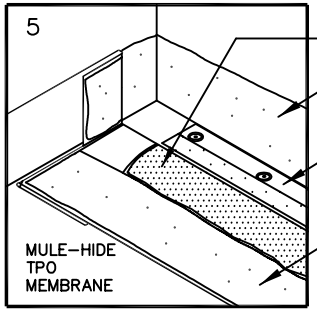

TAPE PRIMER

TPO BONDING ADHESIVE

6" WIDE PRESSURE–SENSITIVE TPO RUSS STRIP

TPO BONDING ADHESIVE

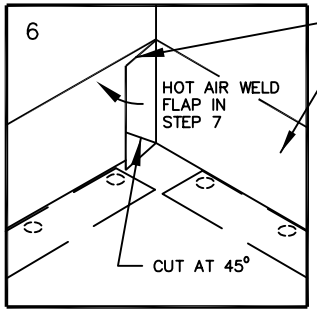

1–1/2" WIDE MIN.

TPO REINFORCED MEMBRANE

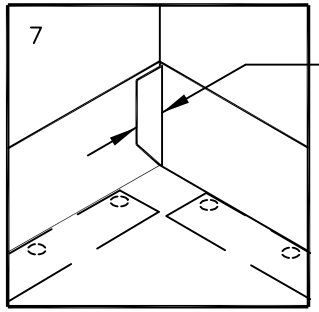

MINIMUM 1–1/2" HOT AIR WELD

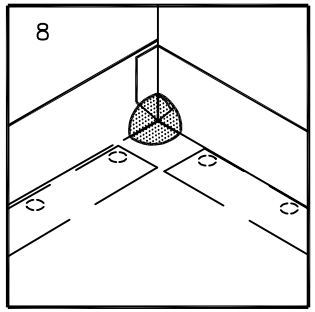

APPLY INSIDE CORNER FLASHING IN ACCORDANCE WITH MULE–HIDE DETAIL MHT–UN–640A OR MHT–UN–640C

APPLY CUT–EDGE SEALANT TO CUT EDGES OF TPO REINFORCED MEMBRANE.

NOTE:

RUSS PRODUCTS CANNOT BE USED WITH FLEECEBACK OR SELF ADHERING MEMBRANES.

MULE-HIDE PRODUCTS CO., INC.	**INSIDE CORNER USING RUSS**	**DETAIL NO.:**
	SYSTEMS:	**MHT-UN-640B**
	ALL TPO SYSTEMS	REVISION DATE: 10/2013

®