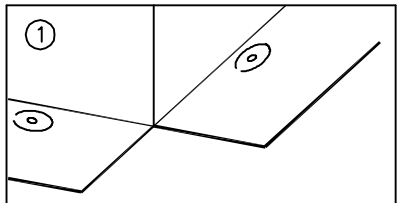

FASTEN MEMBRANE AND FLASH CURB OR WALL WITH CURED EPDM MEMBRANE FOLLOWING STANDARD PROCEDURES USING BONDING ADHESIVE VERTICALLY AND IN-SEAM TAPE AT MEMBRANE SEAM.

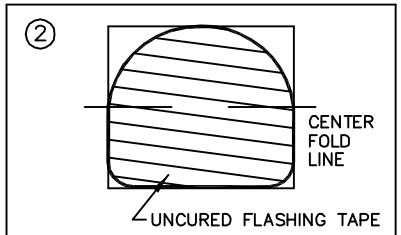

CUT A 4.5" x 6" AND 9" x 12" SECTION OF UNCURED FLASHING TAPE AND ROUND CORNERS AS SHOWN.

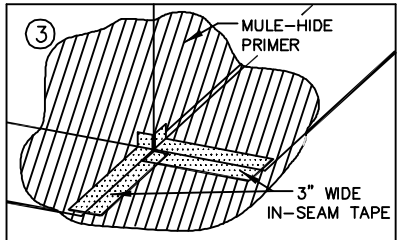

CLEAN THE DRY SPLICE AREA OF THE EPDM WITH MULE-HIDE TAPE PRIMER; APPLY 3" WIDE IN-SEAM TAPE ALONG MEMBRANE SEAM EDGES AS SHOWN.

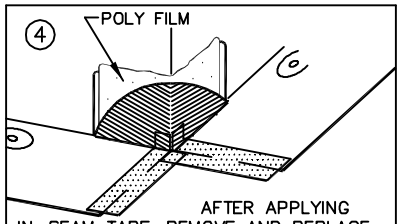

AFTER APPLYING IN-SEAM TAPE, REMOVE AND REPLACE POLY BACKING ON FLASHING. FOLD 4.5" x 6" FLASHING IN HALF WITH ROUNDED PORTION TURNED UP. CENTER ON CORNER AND FIRMLY PRESS AGAINST VERTICAL SURFACE.

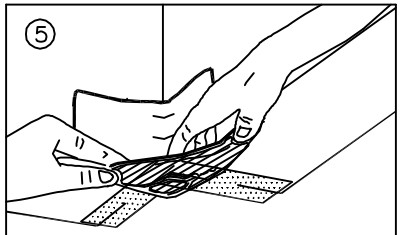

ROLL AND CREASE FLASHING TIGHTLY INTO ANGLE CHANGE AND FIRMLY ROLL FLASHING ONTO THE DECK MEMBRANE.

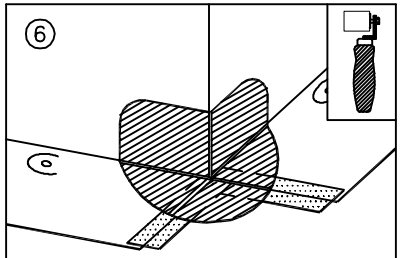

AFTER ADHERING, ROLL WITH A TWO INCH WIDE STEEL HAND ROLLER. PAY PARTICULAR ATTENTION TO THE STEP OFF'S AND ANGLE CHANGE.

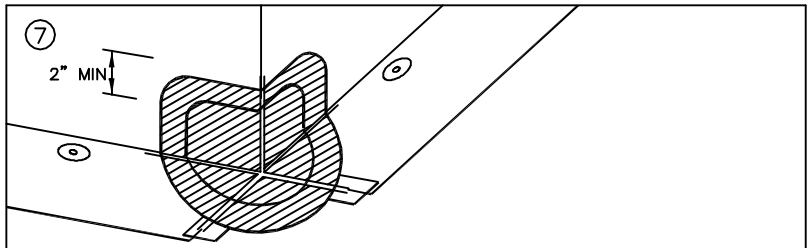

CLEAN THE SEAM AREA WITH MULE-HIDE TAPE PRIMER. INSTALL THE 9" x 12" SECTION OF UNCURED FLASHING TAPE TO EXTEND A MINIMUM 2" BEYOND THE PREVIOUSLY APPLIED 4.5" x 6" FLASHING (STEPS 4-6).

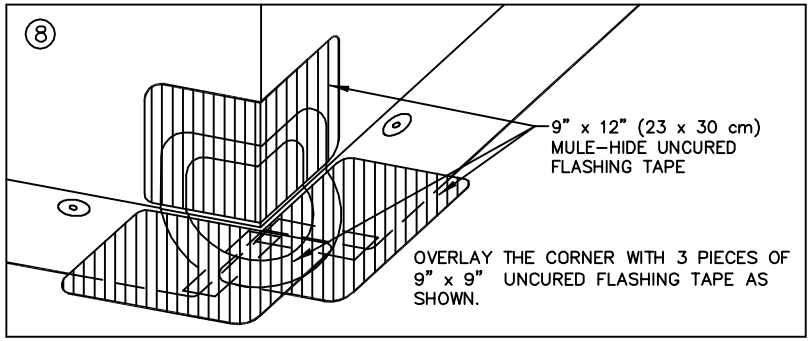

OVERLAY THE CORNER WITH 3 PIECES OF 9" x 9" UNCURED FLASHING TAPE AS SHOWN.

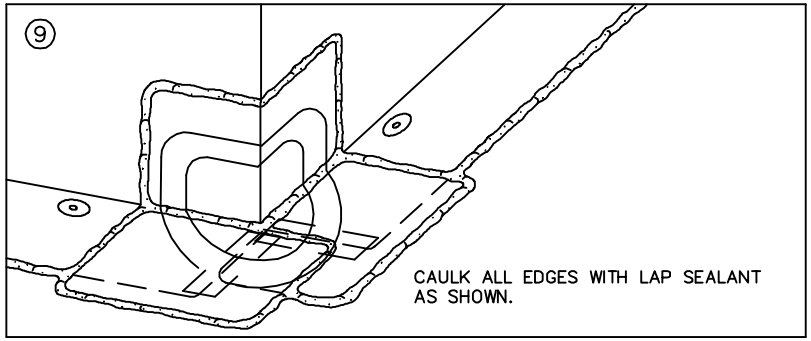

CAULK ALL EDGES WITH LAP SEALANT AS SHOWN.

MULE-HIDE PRODUCTS CO., INC. 2005

Outside Corner With Uncured Flashing Tape

SYSTEMS:
Fully Adhered 90mil System

DETAIL NO.:
MHE-516