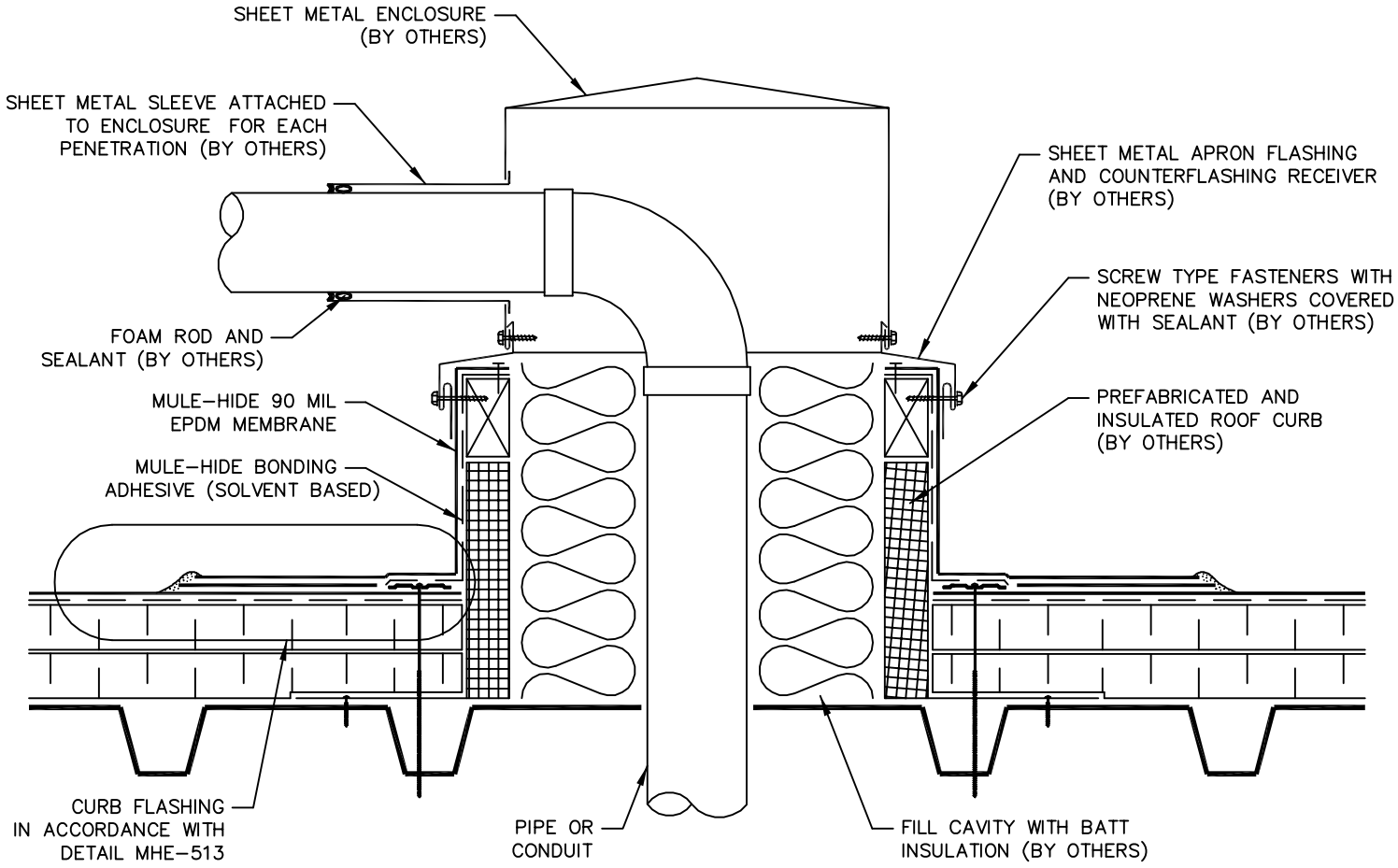

MULE-HIDE PRODUCTS CO., INC. 2005	Multiple Penetrations Curb Detail SYSTEMS: Fully Adhered 90mil System	DETAIL NO.: MHE-519